CE

CM6200

FRESADORA CIRCULAR

CM6200. MANUAL DE FUNCIONAMIENTO

INSTRUCCIONES ORIGINALES

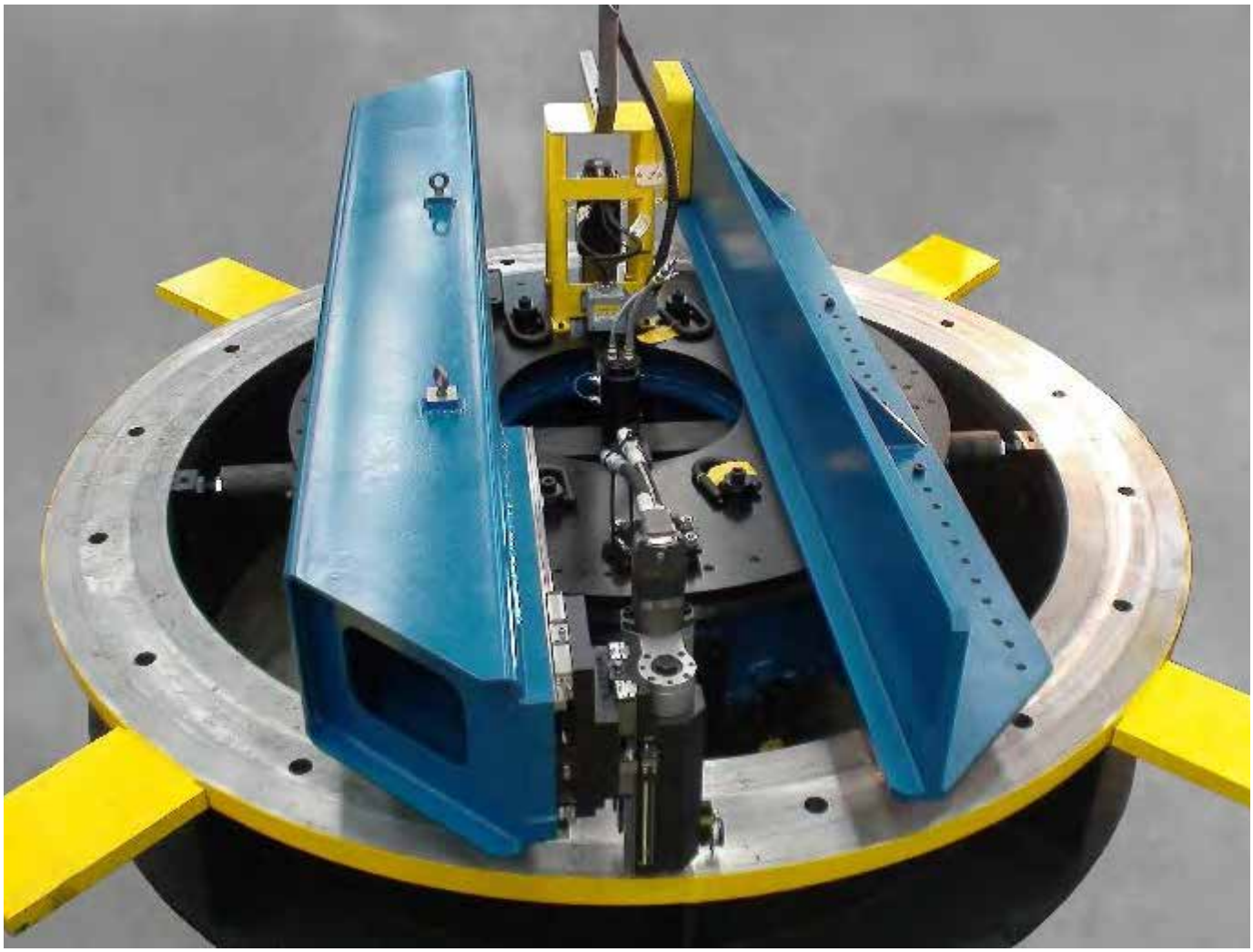

CLIMAX
Portable Machining & Welding Systems

N/P 63674-S
February 2022
Revisión 9

CLIMAX | BORTECH CALDER H&S TOOL

©2022 CLIMAX o sus filiales.
Todos los derechos reservados.

Salvo lo expresamente estipulado en este documento, no se permite la reproducción, copia, transmisión, difusión, descarga ni almacenamiento en ningún medio de almacenamiento de ninguna parte de este manual sin la autorización previa por escrito de CLIMAX. Por la presente, CLIMAX autoriza la descarga de una única copia de este manual y de cualquiera de sus revisiones en un medio de almacenamiento electrónico para verlo e imprimir una copia de este manual o de cualquiera de sus revisiones, siempre que dicha copia electrónica o impresa de este manual o cualquiera de sus revisiones contenga el texto íntegro de este aviso de derechos de autor y se indique que la distribución comercial no autorizada de este manual o cualquiera de sus revisiones está estrictamente prohibida.

En CLIMAX, valoramos su opinión.

Para enviar comentarios o preguntas sobre este manual u otra documentación de CLIMAX, envíe un correo electrónico a documentation@cpmt.com.

Para hacer comentarios o preguntas sobre los productos o servicios de CLIMAX, llame a CLIMAX o envíe un correo electrónico a info@cpmt.com. Para recibir un servicio rápido y preciso, indique a su representante la siguiente información:

- Su nombre
- Dirección de envío
- Número de teléfono
- Modelo de máquina
- Número de serie (si procede)
- Fecha de compra

Sede mundial de CLIMAX

2712 East 2nd Street
Newberg, Oregón 97132 EE. UU.

Teléfono (internacional): +1-503-538-2815
Llamada gratuita (Norteamérica): 1-800-333-8311
Fax: 503-538-7600

Sede mundial de H&S Tool

715 Weber Dr.
Wadsworth, OH 44281 EE. UU.

Teléfono: +1-330-336-4550
Fax: 1-330-336-9159
hstool.com

CLIMAX | H&S Tool (sede en RU)

Unit 7 Castlehill Industrial Estate
Bredbury Industrial Park
Horsfield Way
Stockport SK6 2SU, Reino Unido

Teléfono: +44 (0) 161-406-1720

CLIMAX | H&S Tool (sede europea)

Am Langen Graben 8
52353 Düren, Alemania

Teléfono: +49 24-219-1770
Correo electrónico: ClimaxEurope@cpmt.com

CLIMAX | H&S Tool (sede en Asia Pacífico)

316 Tanglin Road n.º 02-01
Singapur 247978

Teléfono: +65 9647-2289
Fax: +65 6801-0699

CLIMAX | H&S Tool (Sede en Oriente Medio)

Almacén n.º 5, Parcela: 369 272
Um Sequim Road
Al Quoz 4
Apartado de correos 414 084
Dubai, EAU

Teléfono: +971 04-321-0328

SEDES INTERNACIONALES DE CLIMAX

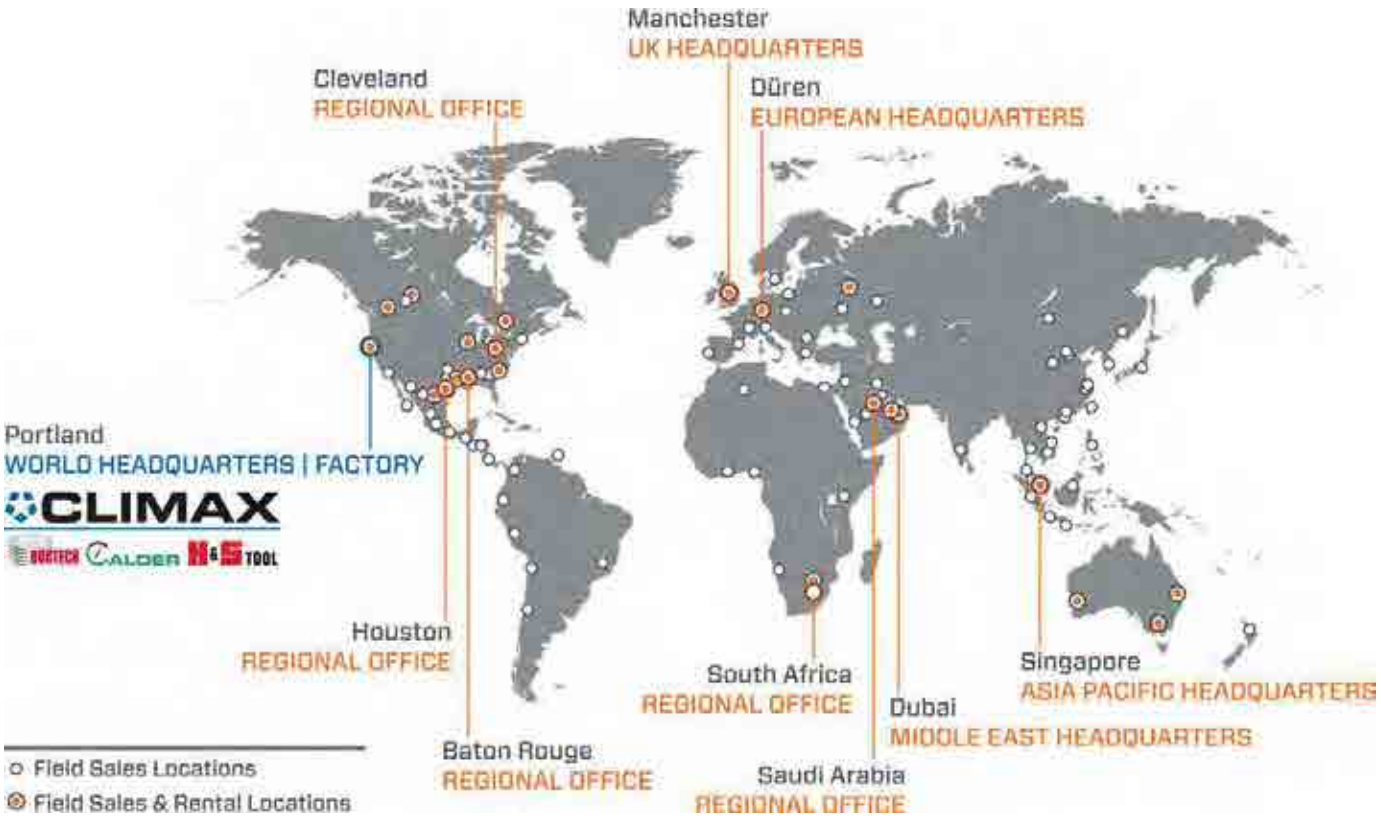

DOCUMENTACIÓN DE LA CE

Declaration of Conformity

2006/42/EC Machinery Directive

2014/35/EU Low Voltage Directive

2014/30/EU EMC Directive

Name of Manufacturer:
Climax Portable Machining and Welding Systems
Full postal address including country of origin:
2712 E. Second St., Newberg, OR 97132, USA
Object(s) of the Declaration:
Portable Milling Machine(s)

Name, type or model, batch or serial number:
CM6200 S/N Range: 150000268 and up
Harmonised Standards used, including number:
BS EN ISO 13854:2019 - Safety of Machinery; Gaps EN ISO 13849-1:2015 - Safety of Machinery; Controls
BS EN ISO 4413:2010 - Safety of Machinery; Fluid Power EN ISO 13850: Safety of Mach-E Stop
EN ISO 11201:2010 - Acoustics; Noise Emitted EN ISO 13857:2019 Safety of mach-Safe Distances
EN ISO 12100:2010 - Safety for Machinery; Principles
EN ISO 13732-1:2008 - Temperature of Touchable Surfaces
EN 60204-1:2018 - Safety of Machinery; Electrical Equipment
EN 61000 series - EMC Emissions and Immunity

Full postal address of the authorized person in the Community:
Guido Ewers zum Rode
Climax GmbH
Am Langen Graben 8
52353 Duren, Germany

Approved as conforming to Standard ISO 9001:2015 by:
Eagle Registrations Inc.
40 N. Main Street, Suite 1880
Dayton, OH 45423

Declaration
I declare that the above information in relation to the supply / manufacture of this product is in conformity with the relevant provisions of the Directives and Harmonised Standards listed above in this document along with their respective amendments and other related documents. This declaration of conformity is issued under the sole responsibility of the manufacturer.

Signature of Manufacturer: _____ **Position: VP of Engineering**

Date and Place: 3/2/2022 **, USA**

CE

CE	N.º de norma **EN 3744 y EN 11201**	CLIMAX

El nivel de **potencia sonora** declarado es:	L_{WA}=	74,4	dBA
La ***presión acústica*** **declarada** del operario es:	L_{pA}=	65,2	dBA
La ***presión acústica*** **declarada de los transeúntes** es:	L_{pA}=	65,3	dBA

GARANTÍA LIMITADA

Climax Portable Machine Tools, Inc (en adelante, «CLIMAX») garantiza que todas las máquinas nuevas carecen de defectos en los materiales y en la mano de obra. Esta garantía está a disposición del comprador original durante un período de un año a partir de la fecha de entrega. Si el comprador original encuentra algún defecto en los materiales o en la mano de obra durante el período de garantía, deberá ponerse en contacto con su representante de fábrica y devolver la máquina completa, a portes pagados, a la fábrica. CLIMAX, a su discreción, reparará o sustituirá la máquina defectuosa sin cargo alguno y devolverá la máquina a portes pagados.

CLIMAX garantiza que todas las piezas carecen de defectos de materiales y mano de obra, y que todo el trabajo se ha realizado correctamente. Esta garantía está a disposición del cliente que compra las piezas o la mano de obra durante un período de 90 días después de la entrega de la pieza o de la máquina reparada, o de 180 días en el caso de máquinas y componentes de segunda mano. Si comprador encuentra algún defecto en los materiales o en la mano de obra durante el período de garantía, deberá ponerse en contacto con el representante de la fábrica y devolver la pieza o la máquina reparada a la fábrica, a portes pagados. CLIMAX, a su discreción, reparará o sustituirá la pieza defectuosa y/o subsanará cualquier defecto en la mano de obra realizada, sin coste alguno, y devolverá la pieza o la máquina reparada a portes pagados.

Estas garantías no se aplican en los siguientes casos:

- Daños después de la fecha de envío no causados por defectos en los materiales o la fabricación
- Daños por un mantenimiento incorrecto o inadecuado de la máquina
- Daños causados por la reparación o modificación no autorizadas de la máquina
- Daños causados por el uso indebido de la máquina
- Daños causados por el uso de la máquina por encima de su capacidad nominal

Cualquier otra garantía, expresa o implícita, incluyendo, sin limitaciones, las garantías de comerciabilidad o aptitud para un propósito en particular, queda excluida y denegada.

Condiciones de Venta

Es importante que revise las condiciones de venta que aparecen en el reverso de la factura. Estas condiciones controlan y limitan sus derechos con respecto a los artículos adquiridos a CLIMAX.

Sobre este manual

CLIMAX proporciona el contenido de este manual de buena fe como guía para el operario. CLIMAX no puede garantizar que la información contenida en este manual sea correcta para aplicaciones distintas a la que se describen en este manual. Las especificaciones del producto están sujetas a cambios sin previo aviso.

ÍNDICE

CAPÍTULO/SECCIÓN **PÁGINA**

1 INTRODUCCIÓN 1
1.1 CÓMO UTILIZAR ESTE MANUAL 1
1.2 ALERTAS DE SEGURIDAD 1
1.3 PRECAUCIONES GENERALES DE SEGURIDAD 2
1.4 PRECAUCIONES DE SEGURIDAD ESPECÍFICAS DE LA MÁQUINA 3
1.5 EVALUACIÓN DE RIESGOS Y MITIGACIÓN DE PELIGROS 4
1.6 LISTA DE VERIFICACIÓN PARA LA EVALUACIÓN DE RIESGOS 5
1.7 IDENTIFICACIÓN DE LAS ETIQUETAS 6
1.8 ELEMENTOS NECESARIOS PERO NO SUMINISTRADOS 9

2 VISIÓN GENERAL 11
2.1 CARACTERÍSTICAS Y OPCIONES 11
2.1.1 Características 12
2.1.2 Opciones de máquina disponibles 12
2.1.3 Velocidades de la mesa giratoria mediante motores hidráulicos en el mecanizado de un solo punto13
2.2 COMPONENTES DE LA MÁQUINA 14
2.3 CAJA DE LA MÁQUINA Y DIMENSIONES DE FUNCIONAMIENTO 17
2.4 ESPECIFICACIONES 19
2.4.1 Especificaciones de peso 19
2.4.2 Especificaciones del motor hidráulico 19

3 DISPOSICIÓN 21
3.1 RECEPCIÓN E INSPECCIÓN 21
3.2 PREPARACIÓN DE LA MÁQUINA PARA SU USO 22
3.2.1 Comprobación previa a la configuración 22
3.2.2 Evaluar el área de trabajo 22
3.3 ELEVACIÓN Y APAREJO 22
3.4 PELIGROS DE LA INSTALACIÓN 25
3.5 INSTALACIÓN DE LA MÁQUINA EN LA PIEZA DE TRABAJO 26
3.5.1 Vista general de la configuración de la fresadora circular CM6200 26
3.5.2 Conjunto de pata de montaje DI 29
3.5.3 Conjunto de pata de montaje DE 33
3.6 MONTAJE DEL BRAZO DE MECANIZADO 35
3.6.1 Montaje del brazo de mecanizado en la mesa giratoria 35
3.6.2 Reposicionamiento del brazo de mecanizado 36
3.6.3 Fresado, rectificado o configuración de un solo punto 38
3.7 POSICIONAMIENTO DEL CONTRAPESO 39

ÍNDICE (CONTINUACIÓN)

CAPÍTULO/SECCIÓN **PÁGINA**

3.8 MONTAJE DE LA MÁQUINA EN LA PIEZA DE TRABAJO. 40
3.8.1 Montaje horizontal DI de la máquina. 40
3.8.2 Montaje horizontal DE de la máquina 41
3.8.3 Montaje vertical DI de la máquina. 41
3.8.4 Montaje vertical de la máquina DE 42
3.8.5 Montaje invertido. 43
3.9 CENTRADO Y NIVELACIÓN DE LA MÁQUINA 47
3.10 FIJACIÓN DE MONTAJE DI 48
3.11 INSTALACIÓN DE CABLES 50

4 FUNCIONAMIENTO 53

4.1 CONFIGURACIÓN DE FUNCIONAMIENTO 53
4.1.1 Comprobaciones previas al arranque 54
4.1.2 Configuración de la herramienta 54
4.1.3 Encarrilado del eje 55
4.2 MANDO COLGANTE. 59
4.2.1 Sistemas de coordenadas 59
4.2.2 Visión general de los controles de la máquina 60
4.2.3 Menú principal. 64
4.2.4 Configuración de la máquina 66
4.2.5 Desplazamiento incremental. 68
4.2.6 Desplazamiento absoluto 69
4.2.7 Movimiento de velocidad incremental. 70
4.2.8 Movimiento de velocidad absoluta 71
4.2.9 Pantallas emergentes 72
4.2.10 Pantallas de historial de alarmas 73
4.2.11 Pantalla de estado 74
4.2.12 Información del sistema 75
4.3 FRESADO CIRCULAR. 75
4.3.1 Instalación de la fresa del cabezal de fresado 76
4.3.2 Ajuste del DRO (equipo del cabezal de fresado) 76
4.3.3 Rangos de operación seguros 76
4.3.4 Sustitución del conjunto de fresado 79
4.3.5 Realización del fresado circular 80
4.4 OPCIÓN DE RECTIFICADO 81
4.4.1 Disposición de los adaptadores de rectificado 81
4.4.2 Funcionamiento 82

ÍNDICE (CONTINUACIÓN)

CAPÍTULO/SECCIÓN **PÁGINA**

4.5 OPCIÓN DE PUNTO ÚNICO . . . 82
4.5.1 Configuración de la junta rotativa para montaje del DI o el DE . . . 84
4.5.2 Sustitución del conjunto de fresado . . . 89
4.5.3 Montaje del accionamiento hidráulico en la configuración de punto único . . . 90
4.5.4 Instalación de la tolva . . . 91
4.5.5 Inversión de la dirección de la tolva . . . 92
4.5.6 Funcionamiento del sistema de alimentación neumática . . . 94
4.5.7 Ajuste de las características de corte . . . 95
4.6 DESMONTAJE . . . 95
5 MANTENIMIENTO Y SOLUCIÓN DE PROBLEMAS . . . 97
5.1 INTERVALOS DE MANTENIMIENTO . . . 97
5.2 TAREAS DE MANTENIMIENTO . . . 98
5.2.1 Comprobar la parada de emergencia de la unidad de acondicionamiento neumático . . . 98
5.2.2 Comprobar el circuito de salida de la unidad de acondicionamiento neumático . . . 98
5.2.3 Mantener la mesa giratoria y el conjunto de accionamiento . . . 99
5.2.4 Sustitución de la batería del PLC . . . 99
5.2.5 Ajustes del freno de arrastre . . . 100
5.2.6 Ajuste del freno de arrastre . . . 100
5.3 LUBRICANTES RECOMENDADOS . . . 102
5.3.1 Lubricación del engranaje del anillo principal . . . 104
5.3.2 Mantenimiento de rieles lineales . . . 104
5.4 RESOLUCIÓN DE PROBLEMAS . . . 105
5.4.1 La máquina no está girando . . . 105
5.4.2 La máquina no se está alimentando o es lenta y no responde . . . 105
5.4.3 La máquina está fresando mal . . . 105
5.4.4 La máquina no está cortando plana . . . 106
5.4.5 El eje no está girando . . . 106
5.4.6 La máquina se detiene repentinamente . . . 106
5.4.7 La profundidad de fresado cambia involuntariamente . . . 106
5.4.8 Alarma o advertencia del servosistema . . . 106
5.5 CÓDIGOS DE ERROR DEL SERVOAMPLIFICADOR MR-J3 . . . 107
6 ALMACENAMIENTO Y ENVÍO . . . 117
6.1 ALMACENAMIENTO . . . 117
6.1.1 Almacenamiento a corto plazo . . . 117
6.1.2 Almacenamiento a largo plazo . . . 118
6.2 TRANSPORTE . . . 118

ÍNDICE (CONTINUACIÓN)

CAPÍTULO/SECCIÓN **PÁGINA**

6.3 PUESTA FUERA DE SERVICIO 118

APÉNDICE A ESQUEMAS DE MONTAJE 119

APÉNDICE B ESQUEMAS 159

APÉNDICE C FDS [FICHAS DE DATOS DE SEGURIDAD]. 177

ANEXO D MANUAL DEL SERVOAMPLIFICADOR MR-J4 179

LISTA DE FIGURAS

FIGURA **PÁGINA**

2-1 Componentes de montaje DI 14
2-2 Sentido de giro para el motor hidráulico, la mesa de giro y el cabezal de fresado. 15
2-3 Componentes de montaje del DE 16
2-4 Dimensiones del DI de la máquina de montaje 17
2-5 Dimensiones del DE de la máquina de montaje 18
2-6 Especificaciones del motor hidráulico 20
3-1 Etiqueta de identificación de la argolla de elevación 23
3-2 Aros de elevación para izar la máquina montada 23
3-3 Aros de elevación para izar la máquina montada en posición vertical 24
3-4 Montaje de elevación en la máquina 24
3-5 Peligro de instalación vertical 25
3-6 Medir la pieza 26
3-7 Medición de la pata 27
3-8 Dedo de ajuste 28
3-9 Conjunto de elevación comprobado con carga N/P 68425. 28
3-10 Tuerca de bloqueo y mordaza de nivelación 29
3-11 Símbolos de candado en la culata 29
3-12 Puntos de aplicación de antiadherente 30
3-13 Tornillo de elevación 30
3-14 Ranura del tornillo de elevación (pata niveladora) 31
3-15 Pata de apoyo no nivelable 32
3-16 Conjunto de pata de montaje DE 33
3-17 Placa de centrado de montaje del DE 34
3-18 Dimensiones DE pata de sujeción 35
3-19 Tornillos de apriete y pasador de tope 36
3-20 Contrapeso 37
3-21 Brazo de mecanizado 37
3-22 Cabezal de fresado instalado 38
3-23 Posiciones de los orificios del perno del contrapeso 39
3-24 Contrapeso y brazo de mecanizado en la mesa giratoria. 40
3-25 Máquina montada en horizontal 40
3-26 Ajustes de la placa de centrado de montaje del DE 41
3-27 Montaje antes de la inversión 44
3-28 Contrachapado y flejes para inversión 44
3-29 CM6200 en posición vertical 45
3-30 CM6200 en vertical en bloques con correas reajustadas 45
3-31 Elevación de la CM6200 fuera de los bloques 46
3-32 Inversión de la CM6200 46
3-33 Ubicación de los bloques 47
3-34 Indicador de cuadrante unido 47
3-35 Conjunto de la pata del mandril de nivelación 48
4-1 Bloqueo del cabezal y DRO 55
4-2 Indicador de cuadrante en la fresadora frontal 56
4-3 Indicador tocando la superficie de ariete de la máquina. 56

LISTA DE FIGURAS (CONTINUACIÓN)

FIGURA **PÁGINA**

4-4 Eje girado hacia la superficie de ariete . . . 57
4-5 Placa de montaje del cabezal de fresado y puntos de encarrilado . . . 57
4-6 Ajuste del tornillo del eje Y . . . 58
4-7 Ubicación de los tornillos del eje X . . . 59
4-8 Resultados de la pasada de mecanizado . . . 59
4-9 Coordenadas absolutas. . . . 60
4-10 Coordenadas incrementales . . . 60
4-11 Mando colgante de la CM6200 . . . 61
4-12 Pantalla de bienvenida al inicio . . . 61
4-13 Pantalla de inicio Restablecer . . . 62
4-14 Pantalla Restablecer con botón pulsado . . . 63
4-15 Pantalla emergente después de iniciarse la parada de emergencia . . . 63
4-16 Pantalla emergente para solicitar el restablecimiento . . . 64
4-17 Aviso de inversión en la polaridad . . . 64
4-18 Menú principal sin aviso de servomotor . . . 65
4-19 Pantalla de configuración de la máquina. . . . 66
4-20 Teclado de entrada del número de configuración de la máquina . . . 67
4-21 Pantalla de verificación de parámetros de configuración . . . 67
4-22 Pantalla de desplazamiento incremental. . . . 68
4-23 Pantalla de movimiento absoluto. . . . 69
4-24 Pantalla de movimiento de velocidad incremental . . . 70
4-25 Pantalla de movimiento de velocidad absoluta . . . 71
4-26 Pantalla de estado. . . . 74
4-27 Pantalla de información del sistema . . . 75
4-28 Botones y pantalla del DRO . . . 76
4-29 Placa de deslizamiento transversal. . . . 79
4-30 Adaptador para el conjunto del cabezal de la herramienta . . . 79
4-31 Tornillos niveladores del cabezal de rectificado . . . 82
4-32 Componentes para la configuración de la junta rotativa . . . 84
4-33 Detalle de la tolva . . . 85
4-34 Ubicación de la tolva neumática . . . 86
4-35 Configuración de montaje DI de la junta rotativa . . . 87
4-36 Configuración de montaje del DE de la junta rotativa . . . 88
4-37 Configuración de montaje del DE de la junta rotativa . . . 89
4-38 Placa de deslizamiento transversal. . . . 90
4-39 Adaptador para el conjunto del cabezal de la herramienta . . . 90
4-40 Servomotor y caja de cambios . . . 91
4-41 Junta rotativa. . . . 91
4-42 Adaptador de la tolva neumática. . . . 92
4-43 Dirección de alimentación de la tolva . . . 92
4-44 Extracción de los pernos para invertir la dirección de avance . . . 92
4-45 Flecha de dirección de avance . . . 93
4-46 Posiciones de modo de la tolva . . . 93
4-47 Método de desconexión de la manguera de alimentación . . . 94
4-48 Válvulas de PCU . . . 94

LISTA DE FIGURAS (CONTINUACIÓN)

FIGURA **PÁGINA**

4-49 Posición de estiba de la torre de mangueras 96
5-1 Especificación de la batería del PLC 99
5-2 Vista superior del freno de arrastre 100
5-3 Vista lateral del freno de arrastre 100
A-1 Conjunto de la mesa giratoria (N/P 62028) 120
A-2 Lista de piezas del conjunto de la mesa giratoria (N/P 62028) 121
A-3 Conjunto de la mesa giratoria (N/P 96031) 122
A-4 Lista de piezas del conjunto de la mesa giratoria (N/P 96031) 123
A-5 Conjunto de protección del codificador (N/P 62869) 124
A-6 Conjunto de elevación comprobado con carga (N/P 68425) 125
A-7 Conjunto de montaje DI (N/P 62038) 126
A-8 Conjunto de pata de mandril ajustable (N/P 89730) 127
A-9 Conjunto de pie no nivelador (N/P 91317) 128
A-10 Conjunto de montaje DE (N/P 62039) 129
A-11 Conjunto del brazo de mecanizado (N/P 72676) 130
A-12 Lista de piezas del conjunto del brazo de mecanizado (N/P 72676) 131
A-13 Conjunto de encarrilado del cabezal fresador del brazo de mecanizado (N/P 63124) 132
A-14 Conjunto del brazo del contrapeso (N/P 62031) 133
A-15 Conjunto de montaje frontal (N/P 63106) 134
A-16 Accesorio de rectificado con conjunto de cabezal de la herramienta (N/P 63239) 135
A-17 Rectificadora para SP CM6200 con reductor de engranajes (N/P 63240) 136
A-18 Rectificadora para SP neumát. (N/P 62537) 137
A-19 Conjunto de cabezal de fresado giratorio de placa (N/P 63250) 138
A-20 Conjunto de cabezal de fresado y perno de tracción (N/P 73354) 139
A-21 Cabezal de fresado 2-29/32 brg 8 tiempos #50 conicidad (N/P 72277) 140
A-22 Lista de piezas del conjunto de cabezales de fresado 1 (N/P 72277) 141
A-23 Lista de piezas del conjunto de cabezales de fresado 2 (N/P 72277) 142
A-24 Conjunto de extensión del cabezal de fresado (N/P 65840) 143
A-25 Conjunto de servoaccionamiento (N/P 83156) 144
A-26 Conjunto de la caja de cambios de servoaccionamiento (N/P 62032) 145
A-27 Conjunto UE de punto único (N/P 83100) 146
A-28 Lista de piezas del conjunto UE de punto único (N/P 83100) 147
A-29 Conjunto de punto único (N/P 62037) 148
A-30 Lista de piezas del conjunto de punto único (N/P 62037) 149
A-31 Conjunto de junta rotativa (N/P 63121) 150
A-32 Unidad de acondicionamiento neumático (N/P 97742) 151
A-33 Conjunto de control de aire para alimentación neumática (N/P 63156) 152
A-34 Conjunto de accionamiento hidráulico de punto único (N/P 83186) 153
B-1 Esquema del cable del mando colgante MR-J3 y MR-J4 (N/P E00009) 160
B-2 Disposición del sistema MR-J3 (N/P A00033) 161
B-3 Conjunto de sujeción de fresado MR-J3 y MR-J4 (N/P B00070) 162
B-4 Montaje de caja de conexiones MR-J3 y MR-J4 (N/P B00083) 163
B-5 Conjunto colgante de operador MR-J3 y MR-J4 (N/P B00110) 164
B-6 Hoja 1 de montaje exterior del panel de control MR-J3 (N/P B00116) 165
B-7 Hoja 2 de montaje interior del panel de control MR-J3 (N/P B00116) 166

LISTA DE FIGURAS (CONTINUACIÓN)

FIGURA **PÁGINA**

B-8 MR-J3 hoja esquemática 1 (N/P C00088) 167
B-9 MR-J3 hoja esquemática 2 (N/P C00088) 168
B-10 MR-J3 hoja esquemática 3 (N/P C00088) 169
B-11 Esquema MR-J4 (N/P A00093). 170
B-12 Conjunto del panel de control MR-J4 exterior (N/P B000394) 171
B-13 Conjunto del panel de control MR-J4 interior (N/P B00394). 172
B-14 MR-J4 hoja esquemática 1 (N/P C00526) 173
B-15 MR-J4 hoja esquemática 2 (N/P C00526) 174
B-16 MR-J4 hoja esquemática 3 (N/P C00526) 175

LISTA DE TABLAS

TABLA **PÁGINA**

1-1 Lista de verificación para la evaluación de riesgos antes de la configuración 5
1-2 Lista de verificación para la evaluación de riesgos tras la colocación 5
1-3 Identificación de etiquetas. 6
2-1 Velocidades de la mesa giratoria durante el mecanizado de punto único 13
2-2 Identificación de montaje DI 14
2-3 Identificación de componentes de montaje DE. 16
2-4 Pesos de subconjuntos. 19
3-1 Identificación del conjunto de elevación 24
3-2 Identificación de la tuerca de bloqueo y de la mordaza de nivelación 29
3-3 Identificación de la ranura del tornillo de elevación 31
3-4 Identificación de pata de elevación sin nivelación 32
3-5 Especificaciones de configuración de la pata de mandril de DI 32
3-6 Tabla de configuración de la pata de mandril de DE 34
3-7 Tornillos de apriete e identificación del pasador de tope 36
3-8 Posición del brazo de mecanizado y del contrapeso 38
3-9 Identificación de la placa de centrado de montaje DE 41
3-10 Identificación de CM6200 vertical 45
3-11 Identificación de la pata del mandril de nivelación 48
4-1 Identificación de la placa de montaje del cabezal de fresado. 58
4-2 Máximo SFPM/SMPM posible desde el motor hidráulico a 60 Hz y 20 gpm (76 lpm) 77
4-3 Máximo SFPM/SMPM posible desde el motor hidráulico a 50 Hz y 16,6 gpm (63 lpm). 78
4-4 Definiciones de color del rango de funcionamiento 78
4-5 Identificación de la placa de deslizamiento transversal 79
4-6 Identificación de los componentes para la configuración de la junta rotativa 84
4-7 Identificación del detalle de la tolva 85
4-8 Identificación de la tolva neumática 86
4-9 Identificación de la configuración de montaje DI. 87
4-10 Identificación de la configuración de montaje del DE 88
4-11 Identificación de la configuración de montaje del DE de la junta rotativa 89
4-12 Identificación de la placa de deslizamiento transversal 90
4-13 Identificación del servomotor y caja de cambios. 91
4-14 Identificación del modo de la tolva 93
4-15 Identificación de las válvulas de PCU 94
5-1 Intervalos y tareas de mantenimiento 98
5-2 Lubricantes homologados. 102
A-1 Piezas de repuesto. 154
A-1 Kit de herramientas N/P 62029. 158

This page intentionally left blank

1 INTRODUCCIÓN

EN ESTE CAPÍTULO:

1.1 CÓMO UTILIZAR ESTE MANUAL - 1
1.2 ALERTAS DE SEGURIDAD - 1
1.3 PRECAUCIONES GENERALES DE SEGURIDAD - 2
1.4 PRECAUCIONES DE SEGURIDAD ESPECÍFICAS DE LA MÁQUINA - 3
1.5 EVALUACIÓN DE RIESGOS Y MITIGACIÓN DE PELIGROS - 4
1.6 LISTA DE VERIFICACIÓN PARA LA EVALUACIÓN DE RIESGOS - 6
1.7 IDENTIFICACIÓN DE LAS ETIQUETAS - 7
1.8 ELEMENTOS NECESARIOS PERO NO SUMINISTRADOS -10

1.1 CÓMO UTILIZAR ESTE MANUAL

Este manual describe la información necesaria para la configuración, el funcionamiento, el mantenimiento, el almacenamiento, el envío y la retirada del servicio del CM6200.

La primera página de cada capítulo incluye un resumen de su contenido que le ayudará a localizar la información que busca. Los anexos contienen información adicional sobre el producto que le ayudará en las tareas de instalación, funcionamiento y mantenimiento.

Lea todo este manual para familiarizarse con el CM6200 antes de intentar configurarlo u operarlo.

1.2 ALERTAS DE SEGURIDAD

Preste especial atención a las alertas de seguridad que figuran impresas en este manual. Las alertas de seguridad llamarán la atención sobre situaciones de peligro específicas que puede encontrar al operar esta máquina. Aquí se definen ejemplos de alertas de seguridad utilizadas en este manual:[1]

⚠ DANGER

indica una situación peligrosa que, si no se evita, ***CAUSARÁ*** la muerte o lesiones graves

1. Para obtener más información sobre alertas de seguridad, consulte *ANSI/NEMA Z5356-2011, Información sobre seguridad del producto en los manuales del producto, instrucciones y otros materiales colaterales*

⚠ WARNING

indica una situación peligrosa que, si no se evita, ***PUEDE CAUSAR*** la muerte o lesiones graves

⚠ CAUTION

indica una situación peligrosa que, si no se evita, puede causar lesiones leves o moderadamente graves

NOTICE

indica una situación peligrosa que, si no se evita, podría provocar daños materiales, fallos en el equipo o resultados de trabajo no deseados

1.3 PRECAUCIONES GENERALES DE SEGURIDAD

CLIMAX es líder en la promoción del uso seguro de máquinas-herramienta portátiles. La seguridad es un esfuerzo conjunto. Como usuario final, debe poner de su parte y conocer su entorno de trabajo y seguir minuciosamente los procedimientos de funcionamiento y las precauciones de seguridad contenidas en este manual, así como las pautas de seguridad de su empleador.

Tenga en cuenta las siguientes precauciones de seguridad cuando opere o trabaje alrededor de la máquina:

Formación: antes de utilizar esta o cualquier otra máquina herramienta, debe recibir instrucciones de un instructor cualificado. Póngase en contacto con CLIMAX para obtener información sobre la formación específica de la máquina.

Evaluación de riesgos: trabajar con esta máquina y a su alrededor representa un riesgo para su seguridad. Como usuario final, es responsable de efectuar una evaluación de riesgos en cada lugar de trabajo antes de configurar y utilizar esta máquina.

Uso previsto: utilice esta máquina de acuerdo con las instrucciones y precauciones de este manual. No utilice esta máquina para ningún otro fin que no sea el uso previsto que se describe en este manual.

Equipo de protección personal: utilice siempre un equipo de protección personal apropiado cuando opere esta o cualquier otra máquina herramienta. Durante el uso de esta máquina, se recomienda llevar ropa resistente al fuego con mangas y perneras largas, ya que las virutas calientes que salen disparadas de la pieza de trabajo pueden quemar o cortar la piel desprotegida.

Zona de trabajo: mantenga ordenada la zona de trabajo alrededor de la máquina. Sujete los cables y mangueras conectados a la máquina. Man-

tenga los otros cables y mangueras lejos de la zona de trabajo.

Elevación: muchos de los componentes de la máquina CLIMAX son muy pesados. Siempre que sea posible, levante la máquina o sus componentes utilizando el equipo de elevación y el aparejo adecuados. Utilice siempre los puntos de elevación designados de la máquina. Siga las instrucciones de elevación de los procedimientos de configuración de este manual.

Bloqueo/etiquetado: bloquee y etiquete la máquina antes de realizar el mantenimiento.

Piezas móviles: las máquinas CLIMAX tienen numerosas piezas móviles expuestas e interfaces que pueden causar graves impactos, pellizcos, cortes y otras lesiones. Salvo en el caso de los controles de funcionamiento fijos, evite tocar las piezas móviles o las herramientas mientras la máquina esté en funcionamiento. Quítese los guantes y proteja el cabello, la ropa, las joyas y los artículos de bolsillo para evitar que se enreden en las piezas móviles.

Bordes afilados: las herramientas de corte y las piezas de trabajo tienen bordes afilados que pueden cortar fácilmente la piel. Utilice guantes protectores y tenga cuidado al manipular las herramientas de corte o las piezas de trabajo.

Superficies calientes: durante el funcionamiento, los motores, las bombas, las unidades de bombas hidráulicas (HPU) y las herramientas de corte pueden generar suficiente calor para provocar quemaduras graves. Preste atención a las etiquetas indicadoras de superficie caliente y evite el contacto con la piel desprotegida hasta que la máquina se haya enfriado.

1.4 PRECAUCIONES DE SEGURIDAD ESPECÍFICAS DE LA MÁQUINA

Peligro ocular: esta máquina produce virutas de metal durante el funcionamiento. Lleve siempre protección ocular cuando utilice la máquina.

Nivel de sonido: Esta máquina produce niveles de sonido potencialmente dañinos. Se requiere protección auditiva cuando se utiliza la máquina o cuando se trabaja alrededor de ella. Durante las pruebas, la máquina produjo los siguientes niveles sonoros[1]:

- Potencia sonora: 74,4 dBA
- Presión acústica del operador: 65,2 dBA
- Presión sonora de los transeúntes: 65,3 dBA

Entornos peligrosos: No opere la máquina en ambientes donde puedan estar presentes materiales explosivos, productos químicos tóxicos o radiación. No exponga la máquina a la lluvia ni a otras condiciones de humedad.

Maquinaria rotativa: La maquinaria rotativa puede lesionar gravemente al

1. Las pruebas de sonido de las máquinas se realizaron de acuerdo con las normas armonizadas europeas EN ISO 3744:2010 y EN 11201:2010

operador. Desconecte todas las fuentes de alimentación antes de interactuar con la máquina.

Recoja la ropa suelta y el cabello largo:: La maquinaria rotativa puede causar lesiones graves. No use ropa suelta ni joyas. Sujete el cabello largo o use un sombrero.

Mangueras, colgantes y cables eléctricos : Siga todas estas pautas:

- No use incorrectamente el cable colgante ya que esto puede dañar el cable y el pedestal.
- Nunca utilice el cable para transportar, tirar o desenchufar.
- Quite todos los pliegues antes de estirar el cable.
- Mantenga los cables y las mangueras alejados del calor, el aceite, los bordes afilados o las piezas móviles.
- Los enchufes deben coincidir con la toma de corriente.
- Nunca modifique los enchufes de ninguna manera.
- No utilice un enchufe adaptador con herramientas eléctricas conectadas a tierra.
- No exponga la máquina a la lluvia ni a la humedad.
- Examine siempre las mangueras y los cables para ver si están dañados antes de usarlos.
- Tenga cuidado y nunca deje caer el equipo eléctrico, esto dañará los componentes.

Ajustes y mantenimiento – Todos los ajustes, lubricación y mantenimiento deben hacerse con la máquina parada y desconectada de todas las fuentes de energía. La válvula de cierre debe estar cerrada y etiquetada antes de llevar a cabo cualquier mantenimiento.

Controles –Los controles de la máquina están diseñados para soportar los rigores del uso normal y los factores externos. Los interruptores de encendido y apagado son claramente visibles e identificables. Si se produce un fallo en el suministro de aire comprimido, asegúrese de apagar la válvula de encendido y apagado antes de abandonar la máquina.

1.5 EVALUACIÓN DE RIESGOS Y MITIGACIÓN DE PELIGROS

Las máquinas herramienta están diseñadas específicamente para realizar operaciones precisas de retirada de material.

Las máquinas herramienta estacionarias incluyen tornos y fresadoras y se encuentran normalmente en un taller. Se montan en un lugar fijo durante el funcionamiento y se consideran una máquina completa y autónoma. Las máquinas herramienta estacionarias presentan la rigidez necesaria para realizar operaciones de extracción de material de la estructura que es una parte integral de la máquina herramienta.

Las máquinas herramientas portátiles están diseñadas para aplicaciones de mecanizado in situ. Por lo general, se fijan directamente a la pieza de trabajo o a

una estructura adyacente y logran su rigidez gracias a la estructura a la que se fijan. El objetivo del diseño es que la máquina herramienta portátil y la estructura a la que está sujeta sean una sola máquina completa durante el proceso de retirada de material.

Para lograr los resultados deseados y favorecer la seguridad, el operario debe comprender y seguir las prácticas de diseño, configuración y funcionamiento que son exclusivas de las máquinas herramienta portátiles.

El operario debe realizar una revisión general y una evaluación de riesgos de la aplicación prevista in situ. Debido a la naturaleza única de las aplicaciones de mecanización portátiles, lo habitual es que se identifiquen uno o más peligros que deberán abordarse.

Al realizar la evaluación de riesgos in situ, es importante tener en cuenta la máquina herramienta portátil y la pieza de trabajo en su conjunto.

1.6 LISTA DE VERIFICACIÓN PARA LA EVALUACIÓN DE RIESGOS

La siguiente lista de verificación no pretende ser exhaustiva sobre los aspectos que hay que tener en cuenta al configurar y utilizar esta máquina herramienta portátil. Sin embargo, estas listas de verificación son habituales para conocer los tipos de riesgos que el montador y el operario deben tener en cuenta. Utilice estas listas de verificación como parte de la evaluación de riesgos:

TABLA 1-1. LISTA DE VERIFICACIÓN PARA LA EVALUACIÓN DE RIESGOS ANTES DE LA COLOCACIÓN

	Antes de la colocación
☐	He tomado nota de todas las etiquetas de advertencia de la máquina.
☐	He eliminado o mitigado todos los riesgos identificados (tropiezos, cortes, aplastamientos, enredos, cizallamientos o caída de objetos).
☐	Me he planteado la necesidad de proteger la seguridad del personal y he instalado las protecciones necesarias.
☐	He leído las instrucciones de instalación (Sección 3) y he hecho un inventario de todos los elementos necesarios pero no suministrados (Sección 1.8).
☐	He creado un plan de elevación, incluyendo la identificación del aparejo adecuado, para cada uno de los elevadores de montaje necesarios durante la instalación de la estructura de soporte y la máquina.
☐	He localizado las trayectorias de caída involucradas en las operaciones de elevación y aparejo. He tomado precauciones para mantener a los trabajadores alejados de la trayectoria de caída identificada.
☐	He tenido en cuenta cómo funciona esta máquina y he identificado la mejor ubicación para los controles, el cableado y el operario.
☐	He evaluado y mitigado cualquier otro riesgo potencial específico de mi zona de trabajo.

TABLA 1-2. LISTA DE VERIFICACIÓN PARA LA EVALUACIÓN DE RIESGOS TRAS LA COLOCACIÓN

	Después de la configuración
☐	He comprobado que la máquina está instalada de forma segura (de acuerdo con la Sección 3) y que la trayectoria de caída potencial está despejada. Si la máquina está instalada en una posición elevada, he comprobado que esté protegida contra caídas.
☐	He identificado todos los posibles puntos de pinzamiento, como los causados por piezas giratorias, y he informado al personal afectado.
☐	He planeado la contención de virutas o astillas producidas por la máquina.
☐	He cumplido los intervalos de mantenimiento requeridos (Sección 5.1) con los lubricantes recomendados (Sección 5.3).

TABLA 1-2. LISTA DE VERIFICACIÓN PARA LA EVALUACIÓN DE RIESGOS TRAS LA COLOCACIÓN

	Después de la configuración
☐	He verificado que todo el personal afectado tenga el equipo de protección recomendado, así como cualquier equipo requerido por el sitio o que sea reglamentario.
☐	He comprobado que todo el personal afectado entienda y respete la zona de peligro.
☐	He evaluado y mitigado cualquier otro riesgo potencial específico de mi zona de trabajo.

1.7 IDENTIFICACIÓN DE LAS ETIQUETAS

Las siguientes etiquetas de advertencia deben estar visibles en su máquina. Si alguna falta o está dañada, póngase en contacto con CLIMAX inmediatamente para reemplazarla.

TABLA 1-3. IDENTIFICACIÓN DE LAS ETIQUETAS

	N/P 27462 Etiqueta de advertencia de máquina de punto único		N/P 29152 Placa de masa
		N/P 29154 Número de serie del CLIMAX, año y matrícula del modelo	
	N/P 35772 Etiqueta de dirección de la válvula de bola		N/P 35828 Placa de modelo del año de serie

TABLA 1-3. IDENTIFICACIÓN DE LAS ETIQUETAS (CONTINUED)

	N/P 46286 Etiqueta de peligro de aplastamiento de fresado circular		N/P 46902 Advertencia de superficie caliente
	N/P 59035 Etiqueta de advertencia de protección ocular		N/P 59037 Etiqueta de advertencia de protección auditiva
	N/P 59039 Etiqueta de advertencia del punto de elevación		N/P 59044 Etiqueta de advertencia sobre lectura del manual del operador
	N/P 62884 Etiqueta de peligro de impacto cara de la brida		
			P/N 64156 Etiqueta de contrapeso y posición del brazo

TABLA 1-3. IDENTIFICACIÓN DE LAS ETIQUETAS (CONTINUED)

	N/P 69422 Etiqueta de información y número de serie		
	N/P 84019 Etiqueta del logotipo CLIMAX		
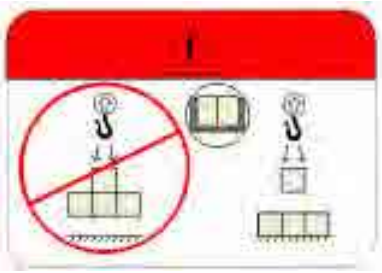	P/N 79385 Etiqueta de advertencia: consulte el manual para obtener instrucciones de elevación		
	N/P 80510 Etiqueta de advertencia: peligro de corte de los dedos con la cuchilla giratoria	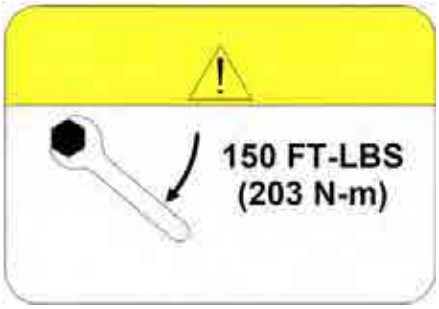	N/P 82157 Etiqueta de advertencia de par de fuerza
	N/P 82163 Etiqueta de advertencia: aplastamiento de mano		N/P 82164 Etiqueta de advertencia: aplasta-miento de cuerpo

TABLA 1-3. IDENTIFICACIÓN DE LAS ETIQUETAS (CONTINUED)

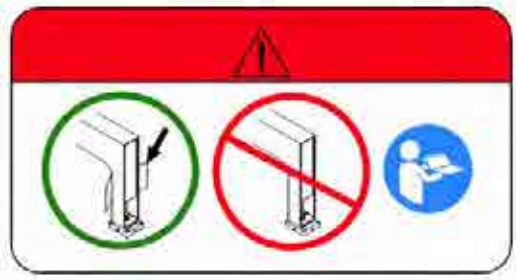	N/P 82172 Etiqueta de peligro, Etiqueta de colocación de la protección de montaje DE
	N/P 82195 Etiqueta de advertencia eléctrica/bloqueo

Para identificar las ubicaciones de las etiquetas, consulte las vistas detalladas del Anexo A.

1.8 ELEMENTOS NECESARIOS PERO NO SUMINISTRADOS

- Llave dinamométrica
- Nivel
- Indicador de cuadrante
- Bloques de soporte
- Placas de relleno (placas de acero que están atornilladas, sujetadas o soldadas a la brida o al alma de una pieza de trabajo para montar o asegurar el acoplamiento de una máquina herramienta a la pieza de trabajo)

2 VISIÓN GENERAL

EN ESTE CAPÍTULO:

2.1 Características y opciones -11
2.1.1 Características -12
2.1.2 Opciones de máquina disponibles -12
2.1.3 Velocidades de la mesa giratoria mediante motores hidráulicos en el mecanizado de un solo punto 13
2.2 Componentes de la máquina -14
2.3 Caja de la máquina y dimensiones de funcionamiento -17
2.4 Especificaciones -19
2.4.1 Especificaciones de peso -19
2.4.2 Especificaciones del motor hidráulico -19

2.1 Características y opciones

La CM6200 es una máquina totalmente configurable con numerosas opciones y accesorios. Este manual cubre el uso y funcionamiento de algunas de estas posibles opciones. Es posible que la configuración de la máquina adquirida no contenga todas las opciones y accesorios detallados en este documento. Si una aplicación específica de la máquina requiere opciones o accesorios adicionales, póngase en contacto con un representante de ventas de CLIMAX para que le ayude a obtener los componentes necesarios.

La CM6200 está diseñada para efectuar diferentes operaciones de mecanizado en una pieza circular, como por ejemplo una brida. La máquina consiste principalmente en una mesa giratoria con un rodamiento circular de precisión y un accionamiento servoeléctrico. La mesa lleva montados un brazo de mecanizado ajustable y un brazo de contrapeso para proporcionar un mecanizado preciso en cualquier orientación. El cabezal de fresado está ensamblado sobre un carro radial. La CM6200 se monta en la pieza de trabajo mediante un sistema de montaje de diámetro interior o exterior.

La aplicación más común de la CM6200 se produce en las bridas de conexión a aerogeneradores. Se utiliza para bridas de gran diámetro con las siguientes dimensiones:

- Para el montaje DI, 2000–4500 mm (78,9–177,2") de diámetro interior (consulte la Figura 2-4 en la página 17)
  El rango de mecanizado del montaje DI es de 2000–5004 mm (78,9–197") con un fresado frontal de 203 mm (8").

- Para el montaje del DE, 3442–5090 mm (135,5–200,4") de diámetro exterior (consulte la Figura 2-5 en la página 18)
  El rango de mecanizado del montaje DE es de 1715–5004 mm (67,5–197") con un fresado frontal de 203 mm (8").

- Para el montaje frontal, 1715 mm (67,5") o mayor (consulte la Figura 2-5 en la página 18)

La máquina se monta fácilmente mediante pernos de sujeción en el diámetro interior de la superficie de trabajo. La máquina puede nivelarse y centrarse fácilmente en su lugar.

El brazo de mecanizado gira alrededor del rodamiento, permitiendo que el cabezal de fresado (o la rectificadora opcional, o las herramientas de un solo punto) corte suavemente.

Para aplicaciones de fresado (o de rectificado opcional), la carrera radial y axial se puede accionar manualmente con una rueda manual. El cabezal de fresado puede girar 360° con una placa giratoria opcional.

2.1.1 Características

La CM6200 incluye las siguientes características:

Distancia entre pivotes: 25" (635 mm) diámetro para grúas de muelle y de construcción.

Sistema de accionamiento rotativo rígido: el rodamiento de gran diámetro y precargado proporciona una rigidez óptima durante el mecanizado.

Brazos giratorios y contrapesos ajustables: tanto el brazo de mecanizado como el brazo de contrapeso se pueden ajustar para obtener la holgura de giro y el rango de mecanizado deseados. Se recomienda utilizar el contrapeso, pero no es necesario para aplicaciones de mecanizado horizontal.

Diseño de mandril: sistema de mandril rígido tubular con nivelación y patas ajustables diseñado para una instalación sencilla y rápida.

Diseño modular: permite retirar muchos de los componentes de la máquina para facilitar la configuración y el almacenamiento.

Controles de pantalla táctil: la opción de servo viene con mandos colgantes de pantalla táctil completa.

2.1.2 Opciones de máquina disponibles

La CM6200 es configurable para muchas necesidades específicas de mecanizado. Opciones disponibles:

Montaje DI: esta máquina se puede montar en el interior de la pieza de trabajo utilizando pernos de sujeción en la superficie interior.

Montaje DE: Esta máquina se puede montar en el diámetro exterior de la pieza de trabajo utilizando nuestro kit de montaje DE opcional, y los estabilizadores o placas de relleno suministrados por el cliente.

Montaje DI y DE: esta máquina se puede montar en la pieza de trabajo utilizando una combinación de las máquinas DI y DE.

Montaje frontal: hay un kit de montaje frontal para permitir el montaje del mandril directamente a la pieza de trabajo o a un aparato de montaje suministrado por el cliente.

Mecanizado en un solo punto: proporciona capacidades de rectificado de brida en diámetros mayores. Esta opción es compatible con todas las opciones.

Accesorio de rectificado: proporciona capacidades de acabado de superficie mucho más finas. Esta opción es compatible con todas las opciones.

Póngase en contacto con CLIMAX para obtener más información sobre estas funciones y otras opciones, o si una aplicación específica de la máquina requiere opciones o accesorios adicionales.

2.1.3 Velocidades de la mesa giratoria mediante motores hidráulicos en el mecanizado de un solo punto

La Tabla 2-1 muestra las velocidades rotativas máximas efectivas para cada motor hidráulico disponible en el mecanizado de un solo punto (es decir, en el rectificado de brida).

TABLA 2-1. VELOCIDADES DE LA MESA GIRATORIA DURANTE EL MECANIZADO DE UN SOLO PUNTO

Motor N/P	Desplazamiento del motor hidráulico	Velocidad máxima[a] a 20 gpm		Velocidad máxima[b] a 10 gpm	
		HPU a 60 Hz	*HPU a 50 Hz*	*HPU a 60 Hz*	*HPU a 50 Hz*
46950	11,9 pulgadas^3 (195 cm^3)	32 rpm	26 rpm	16 rpm	13 rpm
46375	14,9 pulgadas^3 (244,2 cm^3)	25 rpm	20 rpm	13 rpm	10 rpm
46549	18,7 pulgadas^3 (306,4 cm^3)	20 rpm	16 rpm	10 rpm	8 rpm
46550	24 pulgadas^3 (393,3 cm^3)	16 rpm	13 rpm	8 rpm	6,5 rpm
48968	29,8 pulgadas^3 (488,3 cm^3)	13 rpm	10 rpm	6 rpm	5 rpm

a.RPM máximas de la mesa giratoria
b.RPM máximas de la mesa giratoria

2.2 COMPONENTES DE LA MÁQUINA

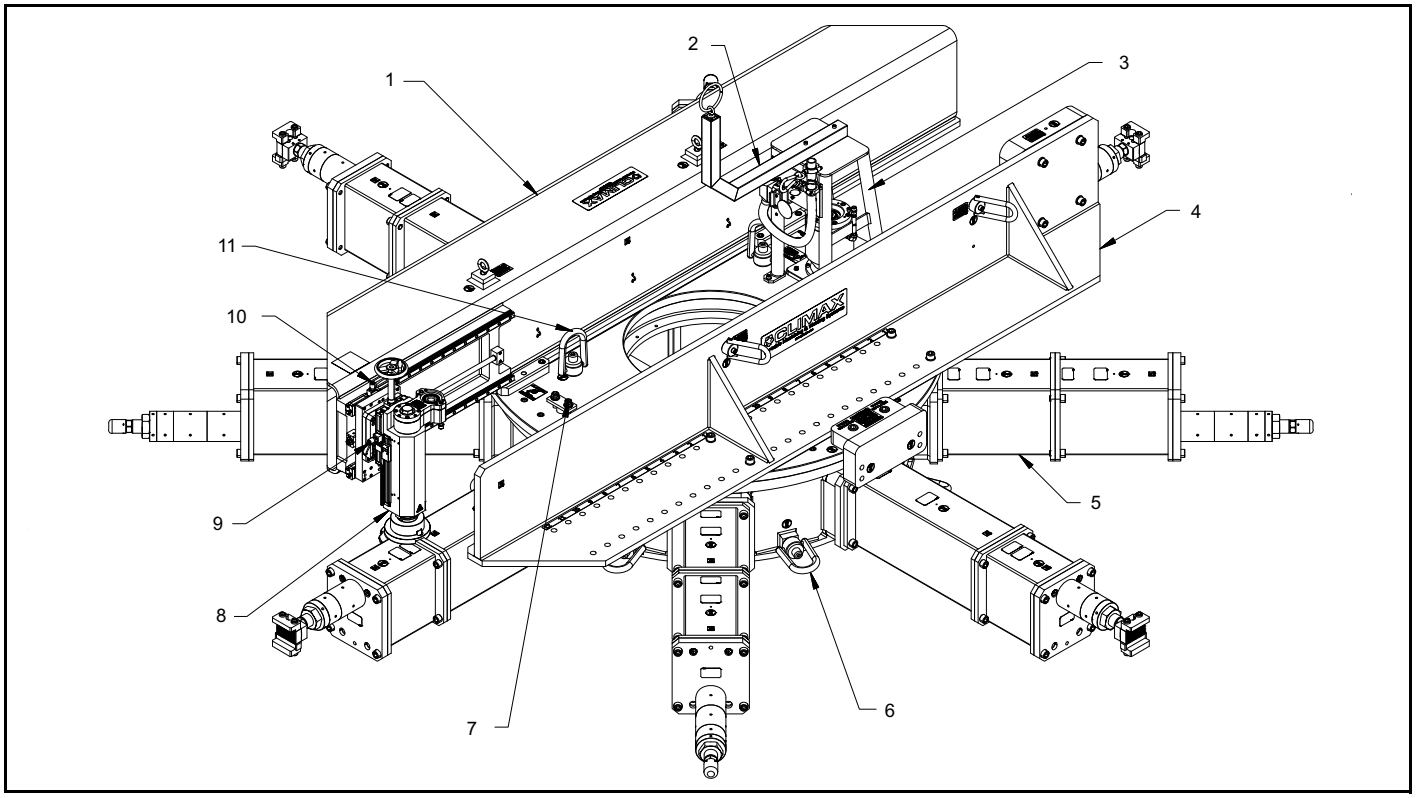

FIGURA 2-1. COMPONENTES DE MONTAJE DI

TABLA 2-2. IDENTIFICACIÓN DE MONTAJE DI

Número	Componente
1	Brazo de mecanizado
2	Torre de mangueras
3	Protección del codificador
4	Conjunto de contrapesos
5	Conjunto de mandril ajustable
6	Aros de elevación
7	Freno de arrastre
8	Cabezal de fresado
9	Freno de desplazamiento axial
10	Freno de desplazamiento radial
11	Aros de elevación

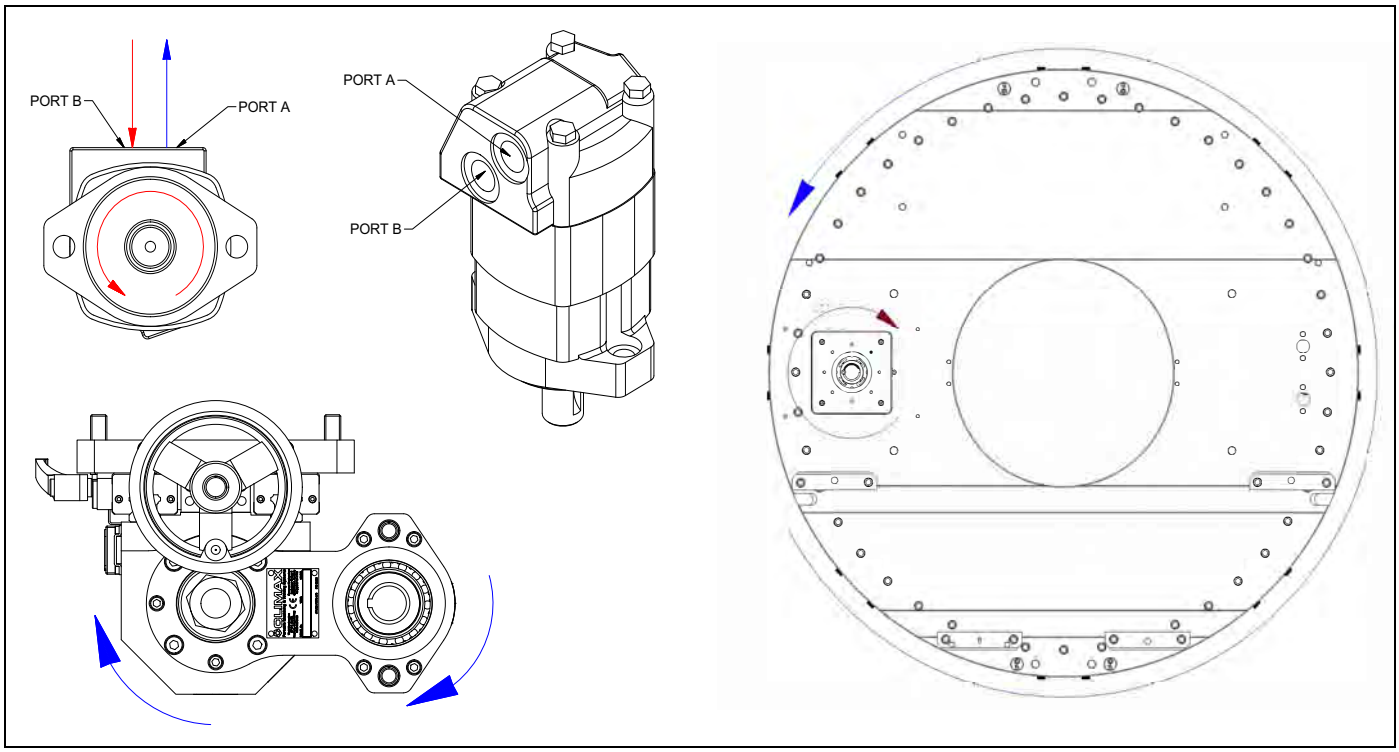

FIGURA 2-2. SENTIDO DE GIRO PARA EL MOTOR HIDRÁULICO, LA MESA DE GIRO Y EL CABEZAL DE FRESADO

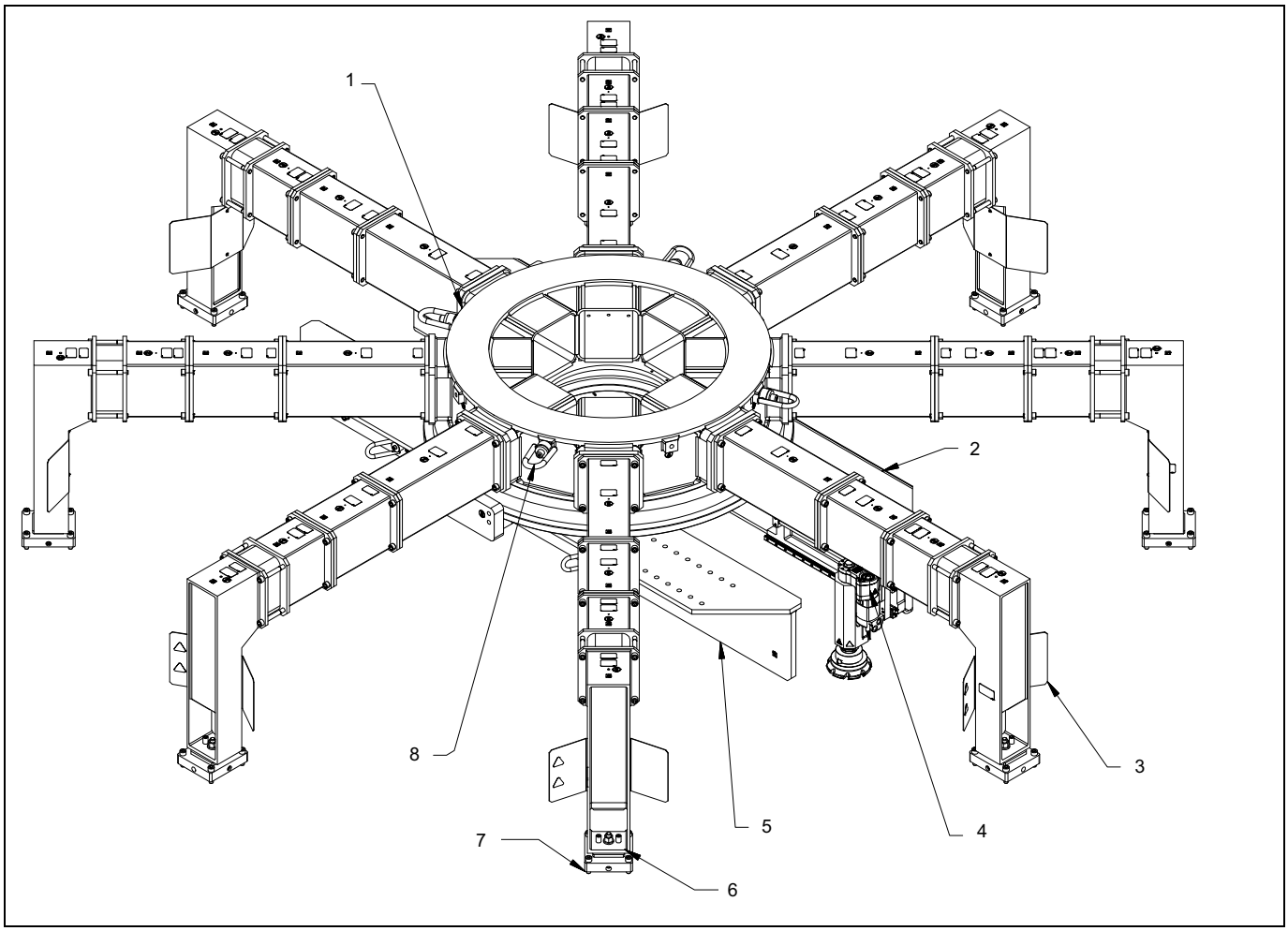

FIGURA 2-3. COMPONENTES DE MONTAJE DE

TABLA 2-3. IDENTIFICACIÓN DE COMPONENTES DE MONTAJE DE

Número	Componente
1	Conjunto de mandril ajustable
2	Brazo de mecanizado
3	Escudo de seguridad
4	Cabezal de fresado
5	Conjunto de contrapesos
6	Placa niveladora
7	Placa de centrado
8	Aros de elevación

2.3 CAJA DE LA MÁQUINA Y DIMENSIONES DE FUNCIONAMIENTO

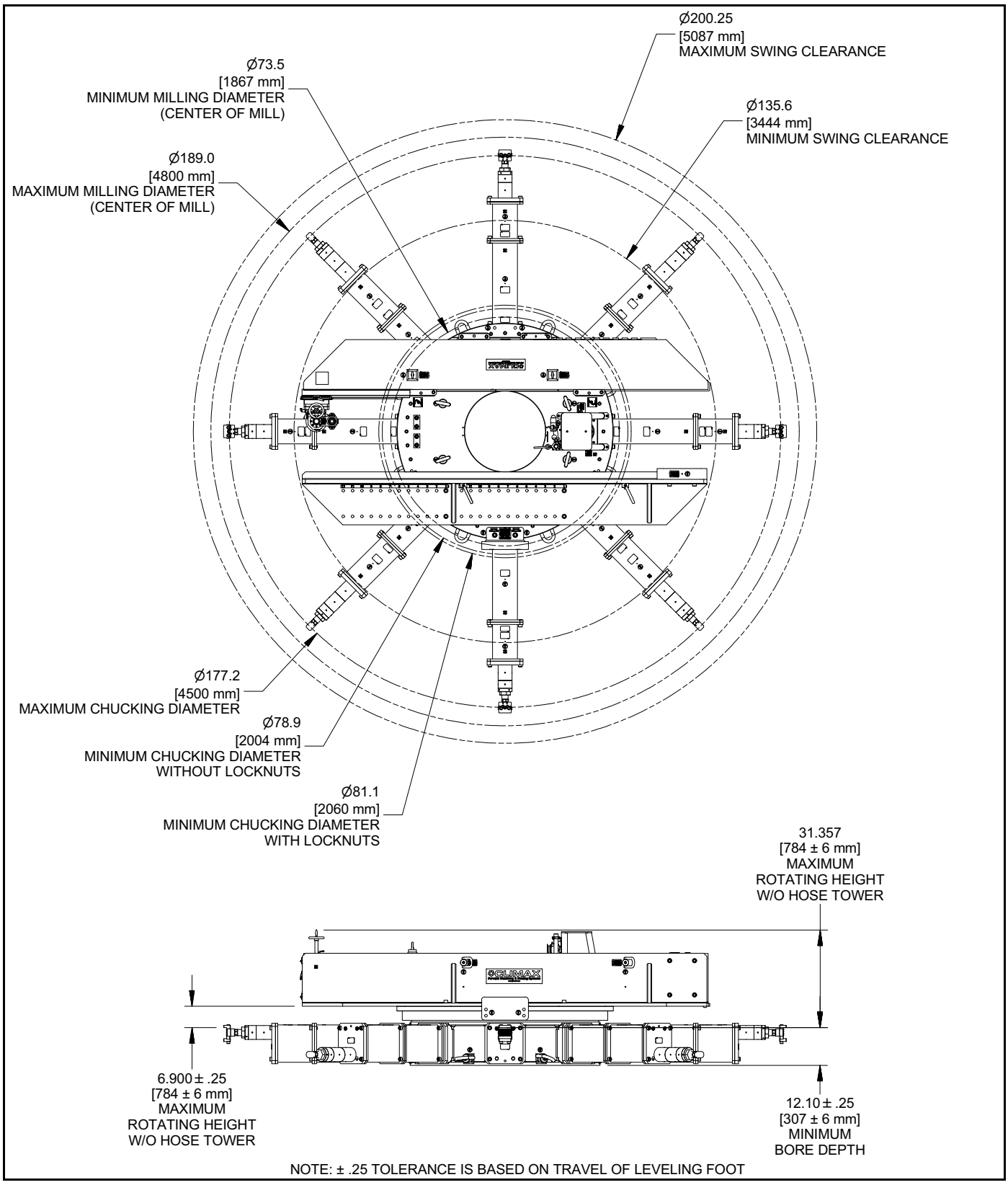

FIGURA 2-4. DIMENSIONES DE LA MÁQUINA DE MONTAJE DI

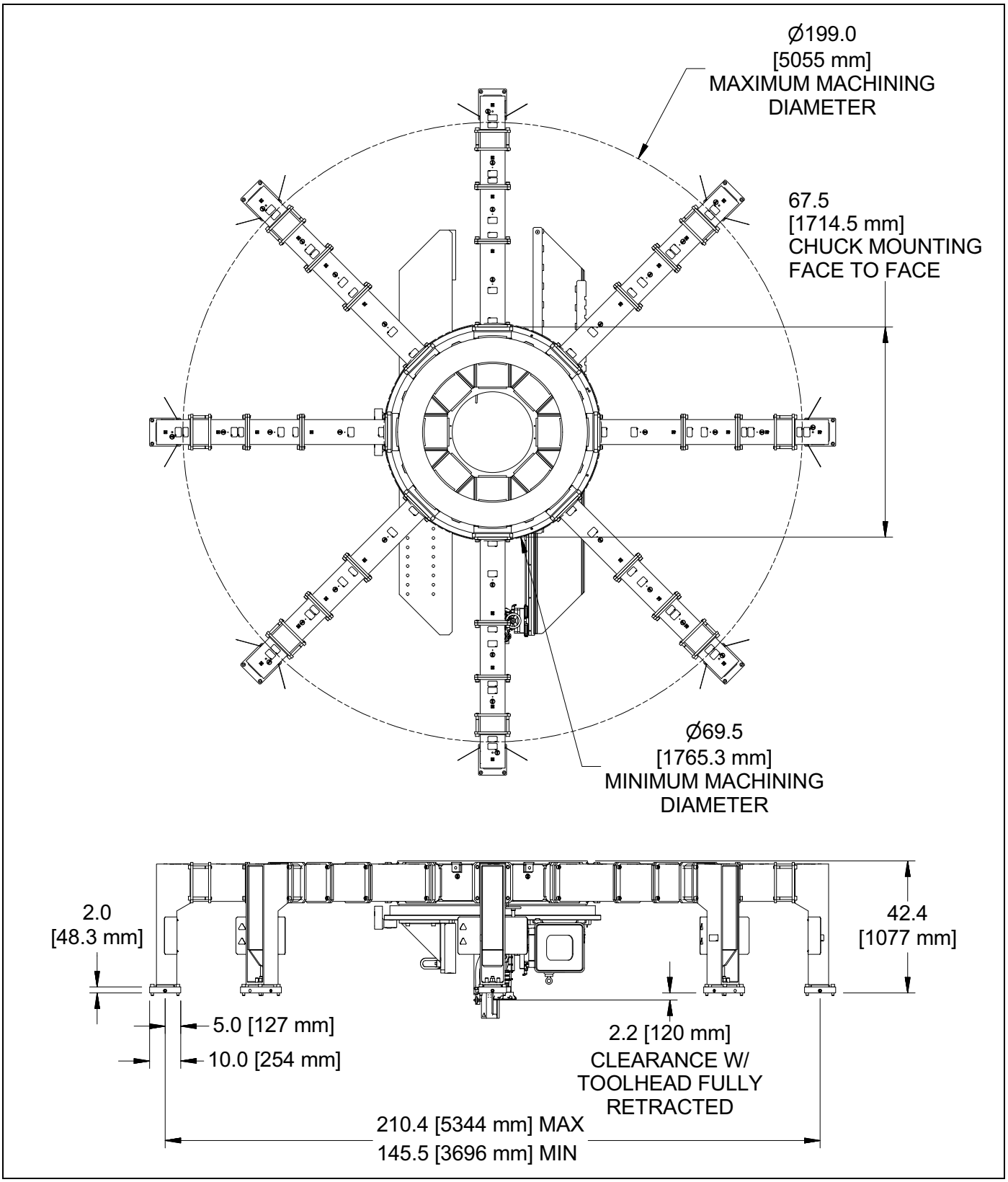

FIGURA 2-5. DIMENSIONES DEL DE DE LA MÁQUINA DE MONTAJE

2.4 ESPECIFICACIONES

2.4.1 Especificaciones de peso

TABLA 2-4. PESOS DE SUBCONJUNTOS

Subconjunto	Número de pieza	Peso
Mesa giratoria:	62028	3.493 lb (1.584 kg)
Brazo de mecanizado:	72676	1310 lb (594 kg)
Brazo de contrapeso:	62031	1590 lb (721 kg)
Sección de la pata de montaje DI de 12 pulgadas:	62038	70,5 lb (32 kg)
Sección de la pata de montaje de 17,5" de DI:	62038	90,4 lb (41 kg)
Sección de la pata de montaje de 27,5" de DI:	62038	110 lb (50 kg)
Sección de la pata de montaje de DE de 5 pulgadas:	60755	25,5 lb (11,6 kg)
Sección de la pata de montaje de DE de 12,5 pulgadas:	57724	66,5 lb (30,2 kg)
Sección de la pata de montaje de DE de 17,5 pulgadas:	57851	80,3 lb (36,4 kg)
Sección de la pata de montaje de 27,5" de DE:	57852	108 lb (49 kg)
Cabezal de fresado:	72277	112 lb (55 kg)

2.4.2 Especificaciones del motor hidráulico

Consulte en Figura 2-6 en la página 20 las velocidades, presiones y caudales máximos de los distintos motores hidráulicos. No exceda estos límites ni los límites de la HPU.

⚠ WARNING

Superar los parámetros previstos del sistema hidráulico puede provocar el mal funcionamiento de la máquina y daños en ella o lesiones a las personas.

Specification Data — 2000 Series Motors

Displ. cm³/r [in³/r]		80 [4.9]	90 [5.5]	100 [6.2]	130 [8.0]	160 [9.8]	195 [11.9]	245 14.9]	305 [18.7]	395 [24.0]	490 [29.8]
Max. Speed (RPM) @ Flow	Continuous	908	836	742	576	477	385	308	246	191	153
	Intermittent	908	1042	924	720	713	577	462	365	287	230
Flow l/min [GPM]	Continuous	75 [20]	75 [20]	75 [20]	75 [20]	75 [20]	75 [20]	75 [20]	75 [20]	75 [20]	75 [20]
	Intermittent	75 [20]	95 [25]	95 [25]	95 [25]	115 [30]	115 [30]	115 [30]	115 [30]	115 [30]	115 [30]
Torque* Nm [lb-in]	Continuous	235 [2065]	265 [2326]	295 [2630]	385 [3420]	455 [4040]	540 [4780]	660 [5850]	765 [6750]	775 [6840]	845 [7470]
	Intermittent	345 [3035]	390 [3458]	445 [3950]	560 [4970]	570 [5040]	685 [5890]	920 [7250]	885 [7820]	925 [8170]	930 [8225]
Pressure Δ bar [Δ PSI]	Continuous	205 [3000]	205 [3000]	205 [3000]	205 [3000]	205 [3000]	205 [3000]	205 [3000]	205 [3000]	155 [2250]	120 [1750]
	Intermittent	310 [4500]	310 [4500]	310 [4500]	310 [4500]	260 [3750]	260 [3750]	260 [3750]	260 [3700]	170 [2750]	140 [2000]
	Peak	310 [4500]	310 [4500]	310 [4500]	310 [4500]	310 [4500]	310 [4500]	310 [4500]	310 [4500]	205 [3250]	170 [2500]
Weight kg [lb]	Standard or Wheel Mount	9.3 [20.5]	9.3 [20.5]	9.5 [21.0]	9.8 [21.5]	10.0 [22.0]	10.4 [23.0]	10.9 [24.0]	11.3 [25.0]	11.8 [26.0]	12.2 [27.0]
	Bearingless	7.3 [16.0]	7.3 [16.0]	7.5 [16.5]	7.7 [17.0]	7.9 [17.5]	8.4 [18.5]	8.8 [18.5]	9.3 [20.5]	9.8 [21.5]	10.2 [22.5]

Maximum Case Pressure: See case pressure seal limitation graph.

*See shaft torque ratings for limitations.

FIGURA 2-6. ESPECIFICACIONES DEL MOTOR HIDRÁULICO

Para conocer los rangos de temperatura de las condiciones de funcionamiento, consulte el manual de la HPU.

3 CONFIGURACIÓN

EN ESTE CAPÍTULO:

3.1 Recepción e inspección -21
3.2 Preparación de la máquina para su uso -22
3.2.1 Comprobación previa a la configuración -22
3.2.2 Evaluar el área de trabajo -22
3.3 Elevación y aparejo -23
3.4 Peligros de la instalación -25
3.5 Instalación de la máquina en la pieza de trabajo -27
3.5.1 Vista general de la configuración de la fresadora circular CM6200 -27
3.5.2 Conjunto de pata de montaje DI -29
3.5.3 Conjunto de pata de montaje DE -34
3.6 Montaje del brazo de mecanizado -36
3.6.1 Montaje del brazo de mecanizado en la mesa giratoria -36
3.6.2 Reposicionamiento del brazo de mecanizado -37
3.6.3 Fresado, rectificado o configuración de un solo punto -39
3.7 Posicionamiento del contrapeso -40
3.8 Montaje de la máquina en la pieza de trabajo -42
3.8.1 Montaje horizontal DI de la máquina -42
3.8.2 Montaje horizontal DE de la máquina -42
3.8.3 Montaje vertical DI de la máquina -43
3.8.4 Montaje vertical de la máquina DE -44
3.8.5 Montaje invertido -45
3.9 Centrado y nivelación de la máquina -49
3.10 Fijación de montaje DI -51
3.11 Instalación de cables -53

Este capítulo contiene información sobre cómo configurar la máquina CM6200 para el diámetro interior (DI), el diámetro exterior (DE), el montaje invertido, el montaje frontal y el montaje de contrapeso. Es posible que su máquina no tenga todos estos componentes. Contacte con CLIMAX para formación y más piezas.

3.1 Recepción e inspección

Su producto CLIMAX ha sido inspeccionado y probado antes de su envío, y empaquetado para enviarlo en condiciones normales. CLIMAX no garantiza el estado de su máquina en el momento de la entrega. Cuando reciba su producto CLIMAX, efectúe las siguientes comprobaciones de recepción.

1. Inspeccione posibles daños en los contenedores de transporte.
2. Compruebe el contenido de los contenedores de envío comparándolo con la factura incluida para asegurarse de que se han enviado todos los componentes.
3. Inspeccione los posibles daños en todos los componentes.

4. Al desembalar la máquina, colóquela sobre bloques de 4" (102 mm) de altura para evitar que se dañen los componentes.
5. Utilice disolvente para eliminar cualquier capa protectora.

La máquina se envía desde CLIMAX con una capa gruesa de LPS 3. El limpiador recomendado es LPS PreSolve Orange Degreaser. Durante el uso de la máquina, se puede utilizar un anticorrosivo alternativo a largo plazo. Utilice siempre el limpiador correcto para la capa protectora aplicada.

Contacte inmediatamente con CLIMAX para notificar si faltan componentes o están dañados.

3.2 PREPARACIÓN DE LA MÁQUINA PARA SU USO

3.2.1 Comprobación previa a la configuración

La CM6200 puede configurarse y montarse de muchas maneras. Antes de montar la fresadora, compruebe lo siguiente:

- Los conjuntos de la máquina están colocados correctamente.
- Hay suficiente espacio para colocar toda la máquina sobre la pieza de trabajo o cerca de ella.
- Todas las conexiones están correctamente establecidas.

3.2.2 Evaluar el área de trabajo

La CM6200 se utiliza a menudo en lugares peligrosos (posiciones elevadas, cerca de otros equipos de operación, por encima de la cabeza, etc.). CLIMAX no puede prever dónde se utilizará esta máquina; por lo tanto, debe realizar una evaluación de riesgos específica del lugar (Sección 1.5 en la página 4 y Sección 1.6 en la página 5) para cada trabajo antes de comenzar a trabajar.

La CM6200 tiene características de funcionamiento remoto que permiten elegir la ubicación óptima para trabajar (Sección 1.6 de la página 5).

⚠ WARNING

Siga siempre prácticas de trabajo seguras, además de los requisitos de seguridad específicos del lugar de trabajo. Es su responsabilidad efectuar una evaluación de riesgos antes de configurar la máquina y siempre antes de utilizarla.

3.3 ELEVACIÓN Y APAREJO

⚠ DANGER

La CM6200 puede pesar 4536 kg (10.000 lbs) cuando está completamente montada en la configuración DI y 5456 kg (12.000 lbs) en la configuración DE. Tenga precaución y siga todos los procedimientos de aparejo del sitio, como un plan de elevación, no permitir que haya nadie debajo de la carga, etc. La caída o el balanceo incontrolado de la maquinaria puede causar lesiones graves o la muerte al operador y a los transeúntes.

La CM6200 cuenta con puntos de elevación para los subconjuntos individuales y para la máquina completamente montada. Los puntos de elevación están etiquetados con la etiqueta que se muestra en la Figura 3-1.

FIGURA 3-1. ETIQUETA DE IDENTIFICACIÓN DE LA ARGOLLA DE ELEVACIÓN

⚠ CAUTION

Levante la máquina solo por los aros de elevación marcados por la Figura 3-1.

Los subconjuntos pueden desmontarse y levantarse individualmente mediante las argollas de elevación etiquetadas en cada uno de ellos.

⚠ DANGER

¡No levante la máquina montada mediante las argollas o los aros de elevación del contrapeso o del brazo de mecanizado! Levante la máquina ensamblada únicamente por los cuatro aros de elevación mostrados en la Figura 3-2 y en la Figura 3-3. Elevar la máquina montada usando puntos de elevación diferentes puede causar que la máquina se suelte del aparejo y caiga. Al caer, las máquinas pueden causar lesiones graves o la muerte.

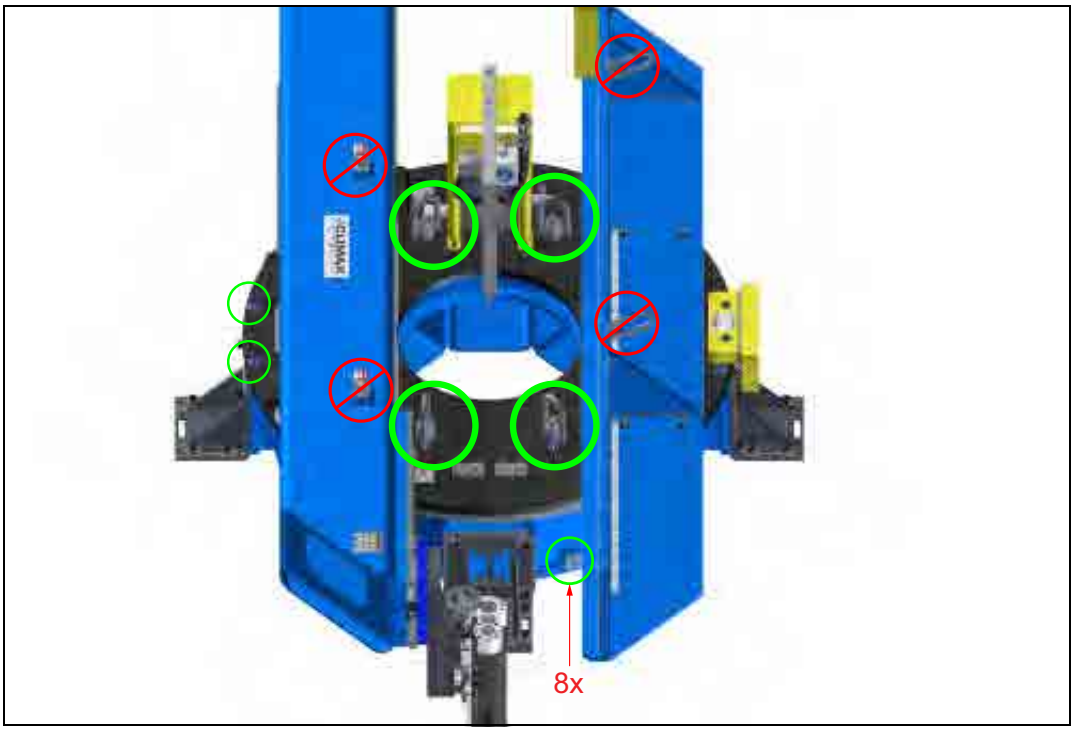

FIGURA 3-2. AROS DE ELEVACIÓN PARA IZAR LA MÁQUINA MONTADA

Hay cuatro posiciones de los aros de elevación en la parte superior de la mesa giratoria (Figura 3-2 en la página 24) y ocho posiciones de estos aros alrededor de los lados del cubo (una de ellas se muestra en la Figura 3-3). Según la orientación de la aplicación, asegure los aros de elevación suministrados en las posiciones necesarias.

FIGURA 3-3. AROS DE ELEVACIÓN PARA IZAR LA MÁQUINA MONTADA EN POSICIÓN VERTICAL

Al levantar la máquina, preste especial atención a la ubicación del centro de gravedad. Para evitar riesgos, asegúrese siempre que de que todas las piezas están bien apretadas.

Aparejo vertical

El conjunto de elevación, como se muestra en la Figura 3-4, permite que la máquina cuelgue a nivel con el mandril de DI o a nivel con el mandril de OD.

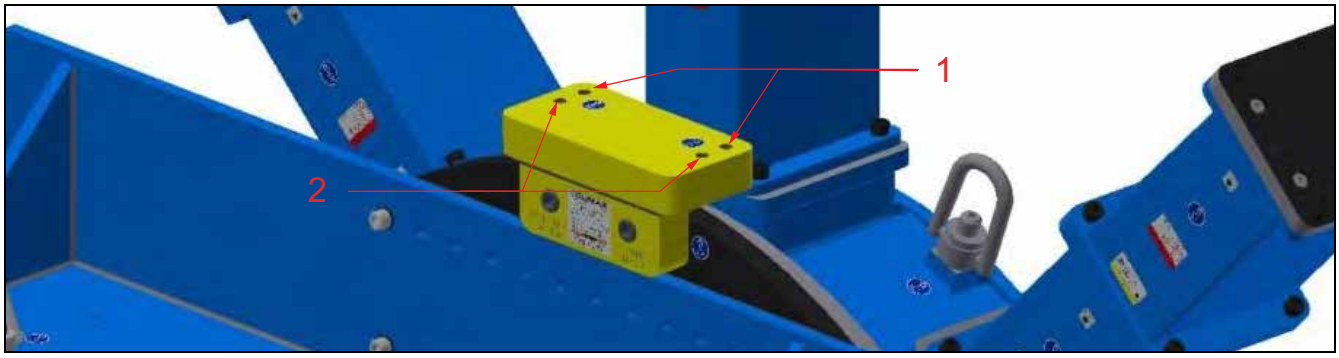

FIGURA 3-4. MONTAJE DE ELEVACIÓN EN LA MÁQUINA

TABLA 3-1. IDENTIFICACIÓN DEL CONJUNTO DE ELEVACIÓN

Número	Componente
1	Posición A
2	Posición B

Instale las argollas de elevación en la posición A para el montaje DI o en la posición B para el montaje DE.

Tenga en cuenta que solo dos de estos orificios son necesarios para levantar la máquina con las argollas de elevación instalados. Los orificios se separan para despejar las patas de montaje.

El conjunto de elevación debe apretarse a 230 pies-libras (310 Nm).

3.4 PELIGROS DE LA INSTALACIÓN

La etapa de instalación puede ser peligrosa, ya que depende de que el operador y el resto del personal sigan las precauciones de seguridad recomendadas. Observe cuidadosamente las siguientes advertencias antes de emprender el proceso de montaje.

⚠ WARNING

Al bascular o caer, la maquinaria podría causar lesiones graves o la muerte al personal que se encuentre cerca de la máquina. Asegure todos los componentes a la máquina antes de elevarla. Los métodos de elevación inadecuados pueden causar lesiones graves o incluso la muerte.

⚠ WARNING

Si no se sujeta correctamente, esta máquina puede caerse y causar lesiones mortales al personal. Preste especial atención a las instalaciones con bridas verticales.

• Las patas de amarre deben estar fijadas a la pieza de trabajo.

• Cuando sea posible, se deben utilizar dedos de ajuste y placas de soldadura de seguridad.

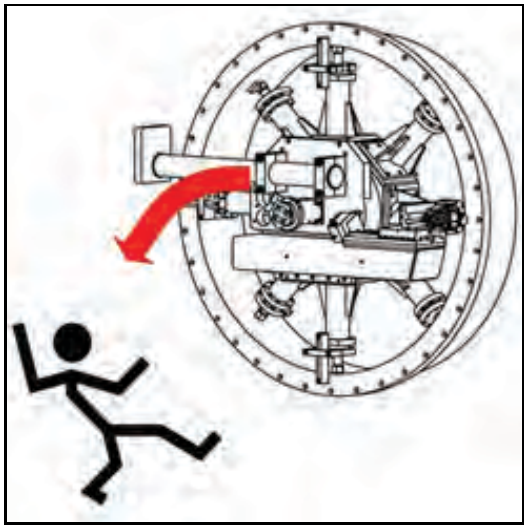

FIGURA 3-5. PELIGRO DE INSTALACIÓN VERTICAL

Para evitar el riesgo de caída de la máquina, asegúrela soldando con remaches los bloques de seguridad por encima de las mandíbulas superiores o utilizando abrazaderas atornilladas en la parte inferior de las patas del mandril de nivelación (los bloques de seguridad y las abrazaderas no se incluyen con la máquina).

⚠ WARNING

No retire la grúa hasta que al menos uno de los métodos de sujeción esté en su lugar y los tornillos de elevación de las patas del mandril estén apretados a 441 Nm (325 pies-libras).

NOTICE

Si el valor de par no puede alcanzarse sin una deformación aceptable de la pieza de trabajo, el operador debe aplicar sus propios dispositivos secundarios de apoyo y sujeción.

⚠ WARNING

No extienda los tornillos de elevación de las patas del mandril más allá de la ranura de extracción total del tornillo roscado. Si es necesario, agregue secciones adicionales de las patas para minimizar la longitud del tornillo de elevación roscado que queda expuesta.

3.5 INSTALACIÓN DE LA MÁQUINA EN LA PIEZA DE TRABAJO

3.5.1 Vista general de la configuración de la fresadora circular CM6200

Inspeccione y realice el mantenimiento necesario en la máquina antes de montarla en una pieza de trabajo. Los siguientes pasos son un resumen de los procesos involucrados para configurar la CM6200 en su modalidad de montaje DI. La modalidad de montaje DE figura en la Sección 3.5.3 en la página 34.

Para montar la máquina en la pieza de trabajo, haga lo siguiente:

1. Compruebe que las fuentes de alimentación estén desconectadas.
2. Mida la superficie para el montaje y seleccione las piezas adecuadas para el mecanizado, la fijación de placas de relleno (suministradas por el cliente) u otras superficies de montaje según sea necesario (Figura 3-6).

FIGURA 3-6. MEDIR LA PIEZA

3. Antes de insertar la fresadora circular en la pieza de trabajo, confirme que las patas están bien sujetas a la máquina.
   a) Para montaje DI:
   Confirme que las patas de montaje DI están ajustadas a un diámetro menor que el diámetro de montaje interno.
   b) Para montaje en DE:
   Confirme que las patas de montaje DE están ajustadas a un diámetro menor que el diámetro de la brida (Figura 3-7. Consulte la Sección 3.5.2 en la página 29 y la Sección 3.5.3 en la página 34 para ver el procedimiento completo de montaje de la pata de mandril.

FIGURA 3-7. MEDICIÓN DE LA PATA

NOTICE

Si se monta la CM6200 en posición vertical, el brazo de mecanizado y el contrapeso deben fijarse a la mesa giratoria (step 5) antes de montar la máquina en la pieza de trabajo (step 8), lo que reducirá la posibilidad de que se produzca un desplazamiento rotativo involuntario durante el proceso de instalación.

4. Coloque el contrapeso y el brazo de mecanizado en ranuras equidistantes del centro de la máquina, con el mismo número de posición, para equilibrar la máquina.
5. Fije el brazo de mecanizado y el contrapeso a la mesa giratoria. Consulte la Sección 3.6 en la página 36 y la Sección 3.7 en la página 40 para conocer los valores de par específicos.
6. Fije las eslingas de la grúa a los puntos de elevación de la mesa giratoria.

⚠ WARNING

Utilice solo eslingas individuales para cada aro de elevación y controle que tengan la longitud apropiada y sean iguales, además de estar clasificados para el peso de la máquina y el ángulo de la eslinga.

7. Levante la máquina lenta y cuidadosamente. Si está desequilibrada, descienda la máquina hasta el suelo. Haga los ajustes antes de intentar levantarla y maniobre de nuevo.
8. Monte la máquina en la pieza de trabajo con los dedos de ajuste (Figura 3-8).
9. Conecte los cables de control que sean necesarios (dependiendo de la configuración).
10. Compruebe que la máquina esté centrada y nivelada antes de realizar cualquier operación de mecanizado.

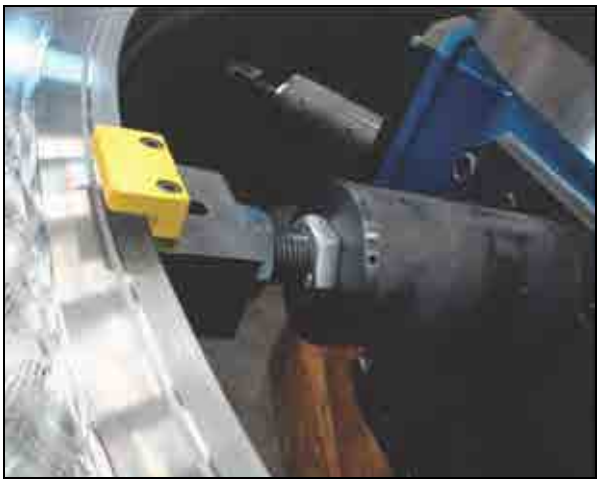

FIGURA 3-8. DEDO DE AJUSTE

Elevación de horizontal a vertical

Cuando levante la CM6200 de la posición horizontal a la vertical, asegúrese de que el conjunto de elevación con carga comprobado (Figura 3-9) esté instalado correctamente en la máquina, como se describe en la Sección 3.8.3 en la página 43 y en la Sección 3.8.4 en la página 44.

Este dispositivo de elevación ayudará a mantener la máquina estable y perpendicular, haciendo más seguro y fácil el montaje vertical de la máquina.

FIGURA 3-9. CONJUNTO DE ELEVACIÓN COMPROBADO CON CARGA N/P 68425

3.5.2 Conjunto de pata de montaje DI

Los elementos resaltados en la Figura 3-10 tienen rosca triple de 4"-4UN.

Las mordazas de la pata del mandril de nivelación incluyen abrazaderas para bridas internas de hasta 8" (210 mm).

TABLA 3-2. IDENTIFICACIÓN DE LA TUERCA DE BLOQUEO Y DE LA MORDAZA DE NIVELACIÓN

Número	Componente
1	Tuerca de bloqueo interna
2	Mandíbula niveladora

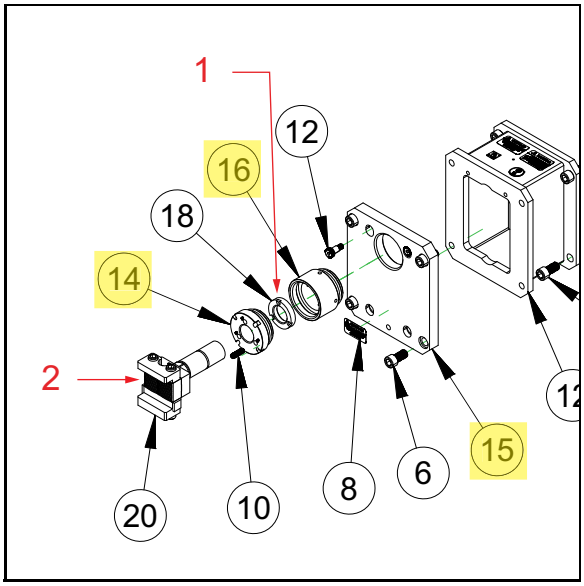

FIGURA 3-10. TUERCA DE BLOQUEO Y MORDAZA DE NIVELACIÓN

En la tapa final, los símbolos de bloqueo resaltados son para el sistema de bloqueo por tornillo de elevación (vea la Figura 3-11).

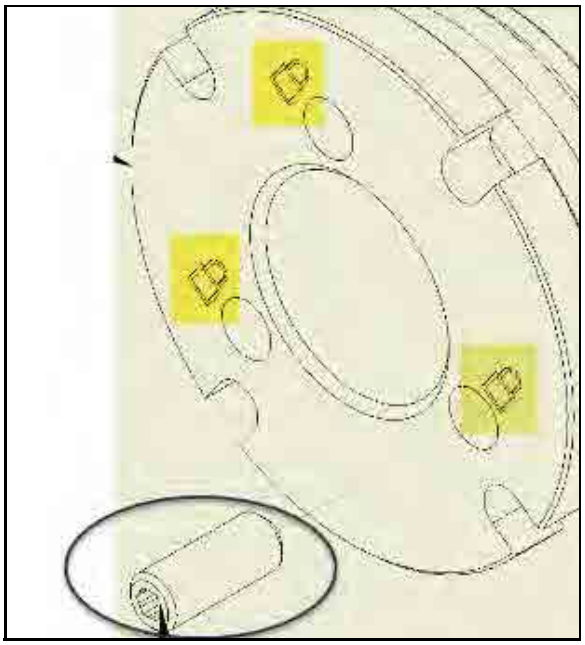

FIGURA 3-11. SÍMBOLOS DE CANDADO EN LA CULATA

NOTICE

Después de completar los ajustes finales en las patas del mandril, apriete uno de los tres tornillos de fijación de cabeza hueca (N/P 74499 M12 x 40 mm de largo a 29 ft-lbs (40 Nm) (circulado en la Figura 3-11) para bloquear la posición del tornillo de elevación. Afloje este tornillo antes de realizar ajustes adicionales en la elevación o de retirar la máquina de la brida.

NOTICE

Las patas del mandril se alternarán en altura y en profundidad alrededor del cubo para obtener un doble plano. En el caso de un solo plano, los tornillos de elevación se montan normalmente en posición alta.

⚠ WARNING

Utilice aparejos suplementarios, tales como dedos de ajuste, cuando monte la máquina, en caso de que quede fuera o atraviese el diámetro de sujeción.

La mesa giratoria se puede configurar en el DI o en la configuración opcional de DE. Una configuración DI permite el montaje interno en una brida. Una configuración de OD permite fijar la máquina al exterior de una brida. Consulte la Sección 4.5.1 de la página 84.

La configuración de doble plano en la configuración de DI utiliza patas alternados de modo que los tramos de nivelación sean más altos que los tramos de no nivelación. Esta disposición puede proporcionar una mayor estabilidad a la máquina, en función del tipo de pieza de trabajo.

NOTICE

Si la pieza de trabajo no se adapta a la configuración de doble plano, se deben utilizar otros métodos para aumentar la estabilidad de la máquina. Consulte la Sección 3.5.3 en la página 34 para conocer los métodos de fijación.

Haga lo siguiente para configurar las patas de montaje de la mesa giratoria:

1. Medir el orificio de la pieza de trabajo.
2. Seleccione las piezas adecuadas para el montaje.
3. Aplique antiadherente (incluido en el kit de herramientas) en los siguientes lugares:
   - Las roscas y las caras de contacto de cada sección de la pata de extensión del mandril, como se muestra en la Figura 3-12.

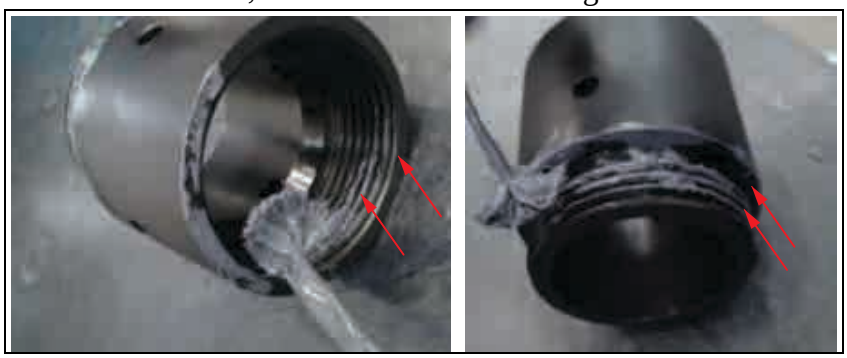

FIGURA 3-12. PUNTOS DE APLICACIÓN DE ANTIADHERENTE

   - Las roscas del tornillo de elevación, para evitar el gripado de las roscas (Figura 3-13.)

FIGURA 3-13. TORNILLO DE ELEVACIÓN

4. Consulte los planos de despiece Figura A-7 de la página 126, Figura A-8 de la página 127 y Figura A-9 de la página 128, Tabla 3-5 en la página 33 y Tabla 3-6 en la página 34 al montar las patas del mandril.
5. Las patas del mandril se alternarán en altura y en profundidad alrededor del cubo. Fije los brazos del mandril al cubo con los tornillos suministrados.
6. Después de fijar la tapa de extremo a la pata de extensión del mandril, instale los conjuntos de patas de mandril niveladoras y no niveladoras. Las patas del mandril niveladoras deben montarse en las cuatro tapas de los extremos superiores de las patas. Las patas del mandril no niveladoras deben montarse en las cuatro tapas de los extremos inferiores de las patas.
7. Fije los brazos del mandril al cubo con los tornillos suministrados.

8. Después de fijar la tapa de extremo a la pata de extensión del mandril, instale los conjuntos de patas de mandril de nivelación.

⚠ CAUTION

El tornillo de elevación debe insertarse de forma que la ranura de extensión total quede dentro de la tapa.

No extienda las patas de elevación más allá de la ranura de extensión total del tornillo roscado (Figura 3-14), ya que esto podría sobrecargar el tornillo de elevación y dañarlo.

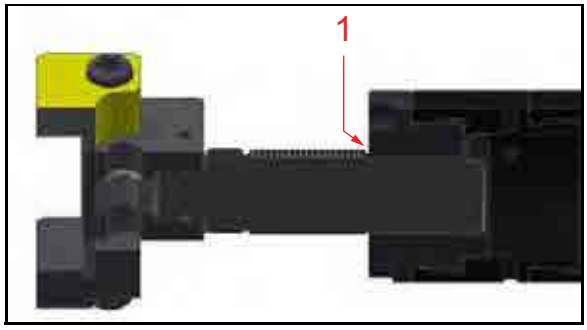

FIGURA 3-14. RANURA DEL TORNILLO DE ELEVACIÓN (PATA NIVELADORA)

Si es necesario, agregue secciones adicionales de las patas para minimizar la longitud del tornillo de elevación roscado que queda expuesta.

TABLA 3-3. IDENTIFICACIÓN DE LA RANURA DEL TORNILLO DE ELEVACIÓN

Número	Componente
1	Ranura del tornillo de elevación

9. Ajuste los pernos de elevación por igual hasta que sean aproximadamente 3/8" (10 mm) inferiores al diámetro interior de la pieza de trabajo.

FIGURA 3-15. PATA DE APOYO NO NIVELABLE

TABLA 3-4. IDENTIFICACIÓN DE PATA DE ELEVACIÓN SIN NIVELACIÓN

Número	Componente
1	Almohadilla de agarre
2	Perno de elevación

10. Monte los dedos de ajuste en los bloques de nivelado. Ajuste los dedos para que se apoyen en la brida de la pieza de trabajo.

⚠ CAUTION

Antes de colocar el mandril en la pieza de trabajo, compruebe que los tornillos de elevación están aproximadamente igual de replegados y equipados con los dedos de ajuste.

TABLA 3-5. ESPECIFICACIONES DE CONFIGURACIÓN DE LA PATA DE MANDRIL DE DI

Rango	Diámetro interior de la pieza de trabajo	Separa-dor de 12,5" (318 mm)	17,5" Separa-dor (445 mm)	Separa-dor de 27,5" (699 mm)	2,5" (64 mm) pata	5" (127 mm) pata
1	78,9–83,9" (2004–2131 mm)[a]	0	0	0	0	0
2	83,9–88,9" (2131–2285 mm)	0	0	0	1	0
3	88,9–93,9" (2285–2385 mm)	0	0	0	0	1
4	93,9–98,9" (2385–2512 mm)	0	0	0	1	1
5	98,9–103,9" (2.512–2.639 mm)	0	0	0	0	2[b]
6	103,9–108,9" (2639–2766 mm)	1	0	0	0	0
7	108,9–113,9" (2766–2893 mm)	1	0	0	1	0
8	113,9– 118,9" (2.893–3.020 mm)	0	1	0	0	0
9	118,9–123,9" (3020–3147 mm)	0	1	0	1	0
10	123,9–128,9" (3147–3274 mm)	0	1	0	0	1
11	128,9–133,9" (3274–3401 mm)	0	1	0	1	1
12	133,9–138,9" (3401–3528 mm)	0	0	1	0	0
13	138,9–143,9" (3528–3655 mm)	1	1	0	0	0
14	143,9–148,9" (3655–3782 mm)	1	1	0	1	0
15	148,9–153,9" (3782–3909 mm)	1	1	0	0	1
16	153,9–58,9" (3909–4036 mm)	1	1	0	1	1
17	158,9–163,9" (4036–4163 mm)	1	0	1	0	0
18	163,9–168,9" (4163–4290 mm)	1	0	1	1	0
19	168,9–173,9" (4290–4417 mm)	1	0	1	0	1
20	173,9–178,9" (4417–4544 mm)	1	0	1	1	1
21	178,9–183,9" (4544–4671 mm)	0	1	1	0	1

a. No utilice la tuerca de bloqueo interna.

b. Hay doce patas de 5 pulgadas en la lista de materiales. Cuando se requieran dos patas de 5" por conjunto de pata (16 en total), atornille dos patas de 2,5" para crear las cuatro patas adicionales de 5".

3.5.3 Conjunto de pata de montaje DE

Haga lo siguiente para montar el conjunto de patas OD:

1. Identifique la longitud necesaria de las secciones de las patas de montaje de diámetro exterior basándose en las mediciones del diámetro exterior de la pieza de trabajo y en las configuraciones de diámetro exterior de la Tabla 3-6 en la página 34.
2. Monte las patas de montaje de DE (Figura 3-16) de acuerdo con la vista de despiece de la Figura A-10 en la página 129.

FIGURA 3-16. CONJUNTO DE PATA DE MONTAJE DE

3. Fije la placa de centrado en los extremos de cada pata de montaje DE (Figura 3-17).

NOTICE

En la Tabla 3-6, las cuatro primeras filas resaltadas en gris oscuro no son aplicables debido a la longitud mínima de giro del brazo. Consulte la Figura 3-18 en la página 35.

FIGURA 3-17. PLACA DE CENTRADO DE MONTAJE DE

TABLA 3-6. TABLA DE CONFIGURACIÓN DE LA PATA DE MANDRIL OD

Diámetro				Separador de 12,5" (318 mm)	17,5" Separador (445 mm)	Separador de 27,5" (699 mm)	5" (127 mm) pata
Rango	A[a]	B[b]	C[c]				
1	92,5" (2350 mm)	102,38" (2600 mm)	110,4" (2804 mm)	1	0	0	0

TABLA 3-6. TABLA DE CONFIGURACIÓN DE LA PATA DE MANDRIL OD (CONTINUED)

Diámetro				Separa-dor de 12,5" (318 mm)	17,5" Separa-dor (445 mm)	Separa-dor de 27,5" (699 mm)	5" (127 mm) pata
Rango	A[a]	B[b]	C[c]				
2	102,5" (2604 mm)	112,38" (2854 mm)	120,4" (3058 mm)	0	1	0	0
3	112,5" (2858 mm)	122,38" (3108 mm)	130,4" (3312 mm)	0	1	0	1
4	122,5" (3112 mm)	132,38" (3362 mm)	140,4" (3566 mm)	0	0	1	0
5	127,5" (3239 mm)	137,38" (3489 mm)	145,4" (3693 mm)	1	1	0	0
6	137,5" (3493 mm)	147,38" (3743 mm)	155,4" (3947 mm)	1	1	0	1
7	147,5" (3747 mm)	157,38" (3997 mm)	165,4" (4201 mm)	1	0	1	0
8	157,5" (4001 mm)	167,38" (4251 mm)	175,4" (4455 mm)	1	0	1	1
9	167,5" (4255 mm)	177,38" (4505 mm)	185,4" (4709 mm)	0	1	1	1
10	182,5" (4636 mm)	192,38" (4886 mm)	200,4" (5090 mm)	1	1	1	0
11	192,5" (4890 mm)	202,38" (5140 mm)	210,4" (5344 mm)	1	1	1	1

a. A se mide desde la cara de montaje hasta la cara de montaje de los soportes verticales.
b. B es la holgura de giro dentro de los soportes verticales del brazo de mecanizado.
c. C se mide desde el centro de la placa de montaje hasta el centro de la placa de montaje.

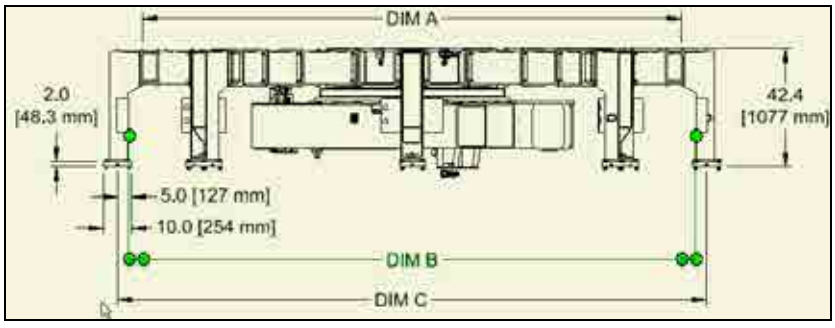

FIGURA 3-18. DIMENSIONES DE PATA DE SUJECIÓN

3.6 MONTAJE DEL BRAZO DE MECANIZADO

3.6.1 Montaje del brazo de mecanizado en la mesa giratoria

Después de que las patas del mandril estén correctamente configuradas y montadas en el cubo del mandril, el brazo de mecanizado debe montarse en la máquina.

NOTICE

Si la máquina va a montarse en posición vertical, este paso debe efectuarse antes de montar la máquina.

El brazo de mecanizado puede montarse en una orientación horizontal después de que el mandril se acople en la pieza de trabajo, pero el brazo de mecanizado debe montarse antes.

El brazo de mecanizado de la CM6200 se fija a la mesa giratoria con abrazaderas. Dos de las abrazaderas (las más cercanas al orificio central de la mesa) se conectan directamente a la parte superior de la mesa giratoria de la CM6200 y no es necesario retirarlas.

Haga lo siguiente para montar el brazo de mecanizado en la mesa giratoria:

1. Cuando lo levante, mantenga el brazo de mecanizado nivelado y plano. utilizando dos de las argollas de elevación montadas en la parte superior del brazo de mecanizado.
2. Coloque el brazo de mecanizado contra las dos mordazas fijas.

NOTICE

La superficie de montaje del brazo de mecanizado, opuesta al cabezal de fresado, está ranurada para permitir el acceso mediante la abrazadera de seguridad. Asegúrese de que las muescas encajan en el pasador de seguridad de la abrazadera.

3. Instale las dos abrazaderas restantes y monte los tornillos 5/8-SHCS para fijar las abrazaderas.

⚠ WARNING

Apriete los pernos de la abrazadera a 150 Nm (110 pies-libras) para evitar movimientos inesperados que podrían causar lesiones graves o la muerte.

TIP:

El perno del selector no necesita estar enganchado en una muesca después del ajuste del brazo giratorio. Su finalidad es limitar el recorrido máximo del brazo giratorio en caso de que este se afloje durante el funcionamiento.

⚠ WARNING

No desactive el pasador de tope de seguridad. El pasador de tope de seguridad está diseñado para evitar el desplazamiento no deseado del brazo de mecanizado, que podría provocar lesiones graves o la muerte.

3.6.2 Reposicionamiento del brazo de mecanizado

El brazo de mecanizado es ajustable de forma incremental para un posicionamiento versátil y para eliminar obstrucciones.

Para reposicionar el brazo de mecanizado, haga lo siguiente:

1. Afloje los tornillos que sujetan las cuatro abrazaderas.
2. Mantenga abierto el pasador de tope de seguridad (Figura 3-19).
3. Deslice el brazo hasta la posición necesaria.
4. Suelte el pasador de parada de tope.
5. Vuelva a apretar las abrazaderas.

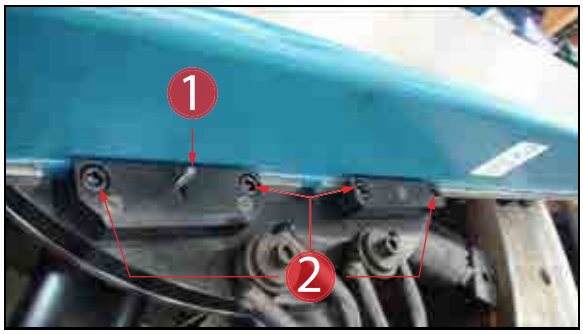

FIGURA 3-19. TORNILLOS DE APRIETE Y PASADOR DE TOPE

TABLA 3-7. TORNILLOS DE APRIETE E IDENTIFICACIÓN DEL PASADOR DE TOPE

Número	Componente
1	Pasador de tope
2	Tornillos de apriete

⚠ CAUTION

Después de ajustar el brazo de mecanizado, asegúrese de que el contrapeso esté ajustado al incremento correspondiente de la posición del tornillo.
Para un mecanizado preciso y para evitar daños en la máquina, el

contrapeso y el brazo de mecanizado deben estar siempre a la misma distancia del centro de la máquina.

El contrapeso y el brazo de mecanizado tienen incrementos numerados a lo largo de las superficies de montaje. Cada ranura numerada en el brazo de mecanizado coincide con una posición de perno numerada en el brazo de contrapeso. Asegúrese de mover el contrapeso un espacio de perno por cada ranura en la que mueva el brazo de mecanizado.

FIGURA 3-20. CONTRAPESO

FIGURA 3-21. BRAZO DE MECANIZADO

El cabezal de fresado tiene un recorrido de 24" (609,6 mm) a lo largo del brazo de mecanizado.

Para ajustar la máquina a un rango de fresado, utilice el mínimo y el máximo de su superficie para determinar los ajustes para el brazo de mecanizado y el contrapeso, como se muestra en la Tabla 3-8.

TABLA 3-8. POSICIÓN DEL BRAZO DE MECANIZADO Y DEL CONTRAPESO

Posición	Rango de superficie en pulgadas (mm)
1	123–73,5" (3.124,2–1.866,9 mm)
2	129–79,5" (3.276,6–2.019,3 mm)
3	135–85,5" (3429,0–2171,7 mm)
4	141–91,5" (3581,4–2324,1 mm)
5	147–97,5" (3733,8–2476,5 mm)
6	153–103,5" (3886,2–2628,9 mm)
7	159–109,5" (4038,6–2781,3 mm)
8	165–115,5" (4191,0–2933,7 mm)
9	171–121,5" (4343,4–3073,4 mm)
10	177–127,5" (4495,8–3238,5 mm)
11	183–133,5" (4648,2–3390,9 mm)
12	189–149,5" (4800,6–3797,3 mm)

3.6.3 Fresado, rectificado o configuración de un solo punto

Consulte la Sección 4.4 en la página 81 para conocer la configuración de rectificado.

Consulte la Sección 4.5 en la página 82 para conocer la configuración de un solo punto.

Para el fresado, el cabezal de fresado se CM6200monta en la placa adaptadora.

Los patrones de orificios para pernos en la placa adaptadora permiten que el conjunto del cabezal de fresado se coloque en incrementos de 180°.

Antes de levantar el conjunto del cabezal de fresado, determine qué alineación es necesaria para las operaciones de mecanizado.

Para instalar el cabezal de fresado, haga lo siguiente:

1. Levante la placa adaptadora y proceda a alinearla.
2. Monte el adaptador en el soporte de la corredera radial y atorníllelo en su sitio.
3. Alinee la placa del cabezal de fresado con los pasadores de la placa adaptadora.
4. Retire todas las herramientas y el equipo de elevación o aparejo.
5. Compruebe que todos los tornillos estén bien apretados.

FIGURA 3-22. CABEZAL DE FRESADO INSTALADO

3.7 POSICIONAMIENTO DEL CONTRAPESO

Después de que las patas del mandril estén correctamente configuradas y montadas en el cubo del mandril, el contrapeso debe montarse en la máquina.

NOTICE

El contrapeso debe instalarse cuando la máquina se utiliza en una aplicación de mecanizado vertical. CLIMAX recomienda utilizar siempre el contrapeso, ya que mejora el rendimiento de la máquina y produce una superficie más plana.

El brazo de mecanizado puede montarse en una orientación horizontal después de que el mandril se acople en la pieza de trabajo, pero el brazo de mecanizado debe montarse antes.

El contrapeso sirve para reducir la carga en el servomotor y proteger el sistema de accionamiento de una fuerza excesiva. El contrapeso también proporciona estabilidad a la máquina, lo que crea tolerancias de mecanizado más precisas.

El contrapeso tiene múltiples ajustes y puede posicionarse deslizándolo radialmente a la siguiente posición de orificio para pernos (Figura 3-23). Siga los

parámetros de la Tabla 3-8 en la página 39 para posicionar el brazo de mecanizado y el contrapeso en la posición necesaria para el correcto desarrollo del mecanizado.

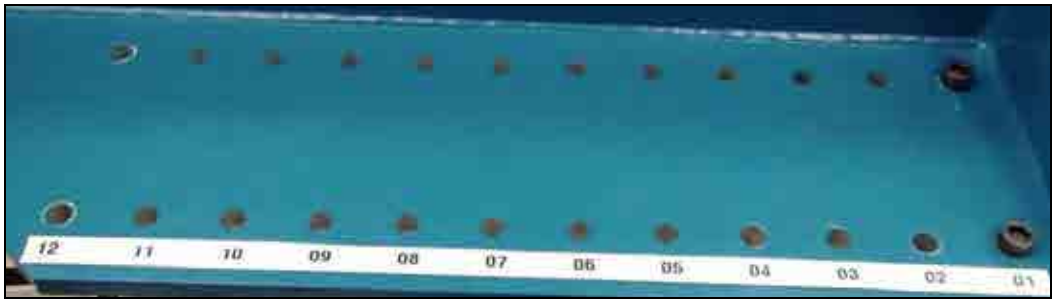

FIGURA 3-23. POSICIONES DE LOS ORIFICIOS DEL PERNO DEL CONTRAPESO

⚠ WARNING

Apriete los pernos del brazo de contrapeso a 150 Nm (110 pies-libras) para evitar movimientos inesperados que podrían causar lesiones graves o la muerte.

Compruebe que todas las piezas de montaje estén bien fijadas. Un contrapeso suelto puede caerse durante el funcionamiento, causando lesiones graves al operario o a los transeúntes.

Haga lo siguiente para montar el contrapeso:

1. Coloque el contrapeso en el lugar requerido por sus necesidades de mecanizado.
2. Atornille el contrapeso firmemente en su lugar (Figura 3-24).

FIGURA 3-24. CONTRAPESO Y BRAZO DE MECANIZADO EN LA MESA GIRATORIA

⚠ CAUTION

Para un mecanizado preciso y para evitar daños en la máquina, el contrapeso y el brazo de mecanizado deben estar siempre a la misma distancia del centro de la máquina. Los números de ubicación deben ser los mismos.

3.8 MONTAJE DE LA MÁQUINA EN LA PIEZA DE TRABAJO

Una vez que las patas del mandril están correctamente configuradas y fijadas al mandril, la máquina está lista para ser montada en la pieza de trabajo.

Consulte la Sección 3.4 en la página 25 para obtener una lista completa de los peligros de la instalación.

3.8.1 Montaje horizontal DI de la máquina

Haga lo siguiente para montar en DI la máquina en una brida horizontal:

1. Ajuste las patas del mandril de montaje DI a una dimensión que sea 0,01" (0,25 mm) inferior por pata que la dimensión del diámetro interno de la pieza de trabajo.
2. Coloque el brazo de mecanizado (consulte la Sección 3.6 en la página 36) y el brazo de contrapeso (consulte la Sección 3.7 en la página 40) antes de proceder a la elevación (consulte la Sección 3.3 en la página 23).
3. Levante la máquina hacia el diámetro interior de la pieza de trabajo, utilizando los cuatro aros de elevación del cubo superior (como se muestra en la Figura 3-2 en la página 24).
4. Extienda las patas del mandril a las posiciones 6:00, 9:00, 12:00 y 3:00 para fijar la máquina en su posición.
5. Centre y nivele la máquina en la brida como se describe en la Sección 3.9 en la página 49.

FIGURA 3-25. MÁQUINA MONTADA EN HORIZONTAL

3.8.2 Montaje horizontal DE de la máquina

Haga lo siguiente para montar la máquina en DE en una brida horizontal:

1. Coloque el brazo de mecanizado (consulte la Sección 3.6 en la página 36) y el brazo de contrapeso (consulte la Sección 3.7 en la página 40) antes de proceder a la elevación (consulte la Sección 3.3 en la página 23).
2. Levante la máquina por encima de la brida utilizando los cuatro puntos de elevación indicados (como se muestra en la Figura 3-2 en la página 24).
3. Centre y nivele la máquina en la brida como se describe en la Sección 3.9 en la página 49.

4. Apriete la tuerca (en el centro de la Figura 3-26) a 230 pies-libras (310 Nm).

TABLA 3-9. IDENTIFICACIÓN DE LA PLACA DE CENTRADO DE MONTAJE DE

Número	Componente
1	Apretado
2	Nivelación
3	Centrado

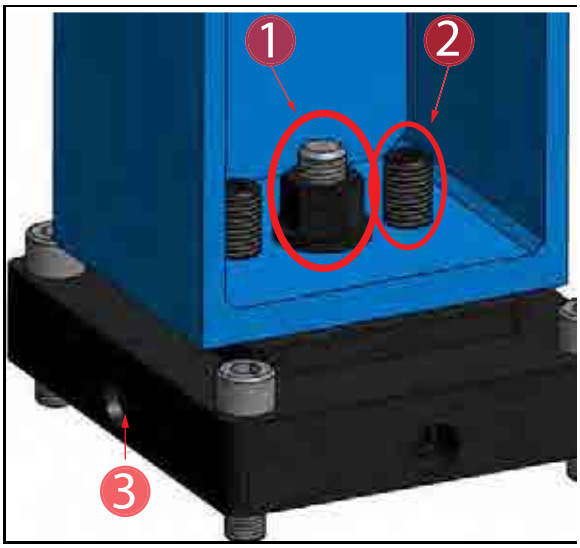

FIGURA 3-26. AJUSTES DE LA PLACA DE CENTRADO DE MONTAJE DE

3.8.3 Montaje vertical DI de la máquina

Cuando monte la CM6200 en posición vertical, asegúrese de que el conjunto de elevación (N/P 68425 en la Figura 3-9 en la página 29) esté instalado correctamente en la máquina. Este dispositivo de elevación ayudará a mantener la máquina estable y perpendicular, haciendo más seguro y fácil el montaje vertical de la máquina.

Haga lo siguiente para montar en DI la máquina en una brida vertical:

1. Ajuste las patas del mandril de montaje DI a una dimensión que sea 0,01" (0,254 mm) inferior por pata que la requerida.
2. Coloque el brazo de mecanizado (consulte la Sección 3.6 en la página 36) y el brazo de contrapeso (consulte la Sección 3.7 en la página 40) antes de proceder a la elevación (consulte la Sección 3.3 en la página 23).

⚠ WARNING

Asegure todas las piezas móviles para evitar que se desplacen al punto más bajo.

3. Conecte y apriete a 230 pies-libras (310 Nm) el conjunto de elevación (N/P 68425 en la Figura 3-9).
4. Levante la máquina hasta el diámetro interior de la brida utilizando el sistema de elevación, hasta que los dedos de ajuste reposen en la brida.
5. Extienda las patas del mandril a las posiciones 6:00, 9:00, 12:00 y 3:00 para fijar la máquina en su posición.

6. Utilice un segundo método de fijación, además de las patas de bloqueo. Consulte la Sección 3.5.3 en la página 34 para conocer las opciones de fijación para el montaje DI.

⚠ DANGER

Para fijar la CM6200 en la pieza de trabajo, **además de** bloquear las patas de apoyo, se debe utilizar la placa de soldadura o la abrazadera de brida. Si no se asegura correctamente la máquina, esta podría caerse de la pieza de trabajo y provocar lesiones graves o incluso la muerte.

7. Retire todas las herramientas de la pieza de trabajo y de la máquina.
8. Centre y nivele la máquina en la brida como se describe en la Sección 3.9 en la página 49.

3.8.4 Montaje vertical de la máquina DE

Cuando monte la CM6200 en posición vertical, asegúrese de que el conjunto de elevación (N/P 68425 en la Figura 3-9) esté instalado correctamente en la máquina. Este dispositivo de elevación ayudará a mantener la máquina estable y perpendicular, haciendo más seguro y fácil el montaje vertical de la máquina.

Haga lo siguiente para montar en DE la máquina en una brida vertical:

1. Coloque el brazo de mecanizado (consulte la Sección 3.6 en la página 36) y el brazo de contrapeso (consulte la Sección 3.7 en la página 40) antes de proceder a la elevación (consulte la Sección 3.3 en la página 23).

⚠ WARNING

Asegure todas las piezas móviles para evitar que se desplacen al punto más bajo.

2. Conecte y apriete a 230 pies-libras (310 Nm) el conjunto de elevación (N/P 68425 Figura 3-9).
3. Levante la máquina sobre la brida utilizando el sistema de elevación, hasta que los dedos de ajuste reposen en la brida.
4. Fije firmemente la pata DE a las placas de relleno (suministradas por el cliente) o a otra estructura de montaje adecuada (consulte la Sección 3.8 en la página 42).

⚠ DANGER

Si no se asegura correctamente la máquina, esta podría caerse de la pieza de trabajo y provocar lesiones graves o incluso la muerte.

5. Retire todas las herramientas de la pieza de trabajo y de la máquina.

6. Centre y nivele la máquina en la brida como se describe en la Sección 3.9 en la página 49.
7. Apriete la tuerca (en el centro de la Figura 3-26 en la página 43) a 230 pies-libras (310 Nm).

3.8.5 Montaje invertido

La CM6200 también se puede montar en posición invertida en la pieza de trabajo. En la posición horizontal, el brazo de mecanizado y el contrapeso están por debajo del mandril en esta posición, en lugar de estar por encima. Se debe seguir el procedimiento de montaje horizontal para obtener el montaje inverso DI. Tenga mucho cuidado al girar la máquina.

⚠ DANGER

Al bascular o caer, la maquinaria podría causar lesiones graves o la muerte al personal que se encuentre cerca de la máquina. Asegure todos los componentes a la máquina e impida que la mesa giratoria gire antes de levantar la máquina. Los métodos de elevación inadecuados pueden causar lesiones graves o incluso la muerte.

Consulte la Sección 3.3 en la página 23 para ver las instrucciones sobre cómo levantar el dispositivo, prestando especial atención a la Figura 3-2 en la página 24 y al uso del conjunto de elevación como se muestra en la Figura 3-4 en la página 25.

⚠ DANGER

Para fijar la CM6200 en la pieza de trabajo, **además de** bloquear las patas de apoyo, se debe utilizar la placa de soldadura o la abrazadera de brida. Si no se asegura correctamente la máquina, esta podría caerse de la pieza de trabajo y provocar lesiones graves o incluso la muerte.

TIP:

El método preferido para invertir la máquina es con dos grúas.

Para el montaje invertido, haga lo siguiente:

1. Retire las patas de sujeción o el soporte frontal si están conectados (Figura 3-27).

FIGURA 3-27. MONTAJE ANTES DE LA INVERSIÓN

2. Coloque un trozo de contrachapado junto a la máquina para que descanse sobre ella después de levantarla (Figura 3-28).
3. Fije las correas del dispositivo de elevación a cuatro argollas de elevación en el cuerpo del mandril (dos en lados opuestos), como se muestra en la Figura 3-28.
4. Levante la máquina lentamente hasta la posición vertical (consulte la Figura 3-29).

FIGURA 3-28. CONTRACHAPADO Y FLEJES PARA INVERSIÓN

FIGURA 3-29. CM6200 EN POSICIÓN VERTICAL

TABLA 3-10. IDENTIFICACIÓN DE LA CM6200 EN VERTICAL

Número	Componente
1	Correas inferiores

5. Si utiliza dos grúas, quite las correas inferiores que se ven en la Figura 3-29.
6. Levante la máquina lo suficientemente alto para colocar los bloques debajo del brazo giratorio y del cuerpo del mandril.
7. Baje la máquina sobre los bloques (consulte la Figura 3-30). Si utiliza dos grúas, vuelva a colocar las correas en las argollas de elevación inferiores.

FIGURA 3-30. LA CM6200 EN VERTICAL EN BLOQUES CON CORREAS REAJUSTADAS

8. Levante la máquina en vertical sin tocar el suelo ni los bloques (consulte la Figura 3-31).
9. Retire los bloques.

FIGURA 3-31. ELEVANDO LA CM6200 FUERA DE LOS BLOQUES

10. Levante las correas inferiores hasta que la máquina esté completamente invertida (consulte la Figura 3-32).
11. Vuelva a colocar los bloques debajo del brazo giratorio y del brazo de contrapeso.

FIGURA 3-32. INVIRTIENDO LA CM6200

12. Baje la máquina sobre los bloques (consulte la Figura 3-33).
13. Instale el aparato de montaje apropiado (montaje DI, montaje DE o montaje frontal).

FIGURA 3-33. UBICACIÓN DE LOS BLOQUES

3.9 CENTRADO Y NIVELACIÓN DE LA MÁQUINA

NOTICE

Al mecanizar al aire libre o bajo la luz directa del sol, tenga en cuenta que los cambios de temperatura pueden afectar a las tolerancias finales. En estas circunstancias, CLIMAX recomienda instalar una zona de sombra temporal.

Haga lo siguiente para centrar y nivelar la máquina con precisión:

1. Mientras gira la máquina, utilice un indicador de cuadrante que refleje la nivelación de la superficie de la pieza de trabajo.
2. Nivele la máquina haciendo lo siguiente:

FIGURA 3-34. INDICADOR DE CUADRANTE UNIDO

   a) Para el DI, ajuste los tornillos de nivelación en cada una de las patas del mandril de nivelación (consulte la Figura 3-35).

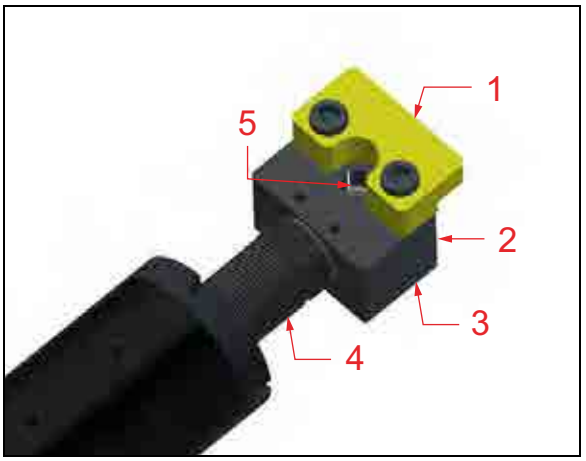

FIGURA 3-35. CONJUNTO DE LA PATA DEL MANDRIL DE NIVELACIÓN

TABLA 3-11. IDENTIFICACIÓN DE LA PATA DEL MANDRIL DE NIVELACIÓN

Número	Componente
1	Dedo de ajuste
2	Ajustador de mandíbula
3	Ajustador de base
4	Perno de elevación
5	Tornillo nivelador

   b) Para el DE, gradúe los tornillos de ajuste de nivelación sobre la placa de centrado (consulte la Figura 3-26 en la página 43).
3. Vuelva a colocar el indicador de cuadrante para comprobar el centrado de la máquina.
4. Centre la máquina haciendo lo siguiente:
   a) Para el DI, ajuste los pares opuestos de las patas del mandril (una se muestra en la Figura 3-35).

b) Para el DE, gradúe los tornillos de ajuste de nivelación en la placa de centrado (consulte la Figura 3-26 en la página 43).

5. Compruebe el nivel de la máquina y vuelva a centrarla.
6. Repita step 2 a 6step 6la máquina esté alineada.
7. Fije la máquina en su sitio de acuerdo con la Sección 3.10 en la página 51 (para el DI) y la Sección 3.5.3 en la página 34 (para el DE).
8. Vuelva a comprobar la alineación de la máquina. Si es necesario realizar algún ajuste, repita «Fijación de montaje DI» en la página 51 (para el DI) y la Sección 3.5.3 en la página 34 (para el DE).
9. Marque el punto alto de la brida para que la profundidad de fresado inicial pueda ajustarse en este punto.
10. Retire cualquier aparejo.

3.10 FIJACIÓN DE MONTAJE DI

En las configuraciones de DI, la CM6200se sujeta en la pieza de trabajo mediante la fuerza de fricción de los ocho tornillos de elevación de las patas del mandril.

NOTICE

Todos los tornillos de elevación de las patas del mandril deben estar apretados a un par de al menos 441 Nm (325 pies-libras). El valor de torque mínimo del perno de elevación se determinó con pernos roscados lubricados y una interfaz pieza de trabajo/perno seco.

Antes de montar la CM6200 en la pieza de trabajo, compruebe lo siguiente:

- La superficie de la pieza de trabajo que entrará en contacto con los tornillos de elevación de la CM6200 está seca y completamente exenta de aceite, grasa u otro lubricante.

⚠ WARNING

La humedad, el aceite o los lubricantes en las áreas de contacto de la pata de sujeción de la pieza de trabajo pueden provocar una fuerza de rozamiento de elevación insuficiente y permitir que la máquina se desplace o se caiga de la pieza de trabajo.

- Las roscas de los tornillos de elevación de las patas del mandril están recubiertas con lubricante antiadherente.

⚠ WARNING

Si no se aplica lubricante antiadherente a las roscas de los tornillos de elevación, la fuerza de sujeción del perno de elevación puede ser

inferior a la prevista, lo que puede permitir que la máquina se desplace o se caiga de la pieza de trabajo.

Haga lo siguiente para instalar el montaje DI:

1. Apriete todos los tornillos de elevación de nivelación con un par de apriete **mínimo** de 441 Nm (325 pies-libras). Alterne las patas de elevación opuestas cuando apriete para asegurarse de que la alineación de la configuración no se vea afectada.
2. Extienda todos los tornillos de elevación de las patas del mandril que no estén niveladas y apriételos con un par de apriete **mínimo** de 441 Nm (325 pies-libras).

⚠ WARNING

Las patas del mandril niveladoras y no niveladoras deben ajustarse a las especificaciones de par de torsión indicadas en las instrucciones anteriores. Si no se aprietan suficientemente las patas del mandril, la máquina puede resbalar o caerse de la pieza de trabajo, lo que puede provocar lesiones graves o la muerte. Consulte en la Sección 3.5.3 los métodos para asegurar la CM6200 en la pieza de trabajo.

3. Fije los tornillos de elevación según los métodos descritos en la Sección 3.5.3 en la página 34.
4. Retire los dedos de ajuste si la operación de la máquina no se puede realizar con los dedos de ajuste aún unidos a las patas del mandril de nivelación.

⚠ WARNING

No retire más de un dedo al mismo tiempo, ya que esto puede hacer que la máquina se deslice en la brida y se caiga de la pieza de trabajo, causando lesiones o la muerte.

Los dedos de ajuste solo se deben retirar si la fresadora no puede realizar las operaciones de mecanizado necesarias en la pieza de trabajo con ellos todavía sujetos a las patas del mandril. Si se retiran los dedos de ajuste, se reduce la estabilidad de la máquina.

Además de este par mínimo de 441 Nm (325 pies-libras), se deben utilizar en combinación tantos de los siguientes métodos de fijación como sea posible. **Las aplicaciones de montaje vertical e invertido deben utilizar la placa soldada o la abrazadera de brida, además de bloquear los pies de elevación.** Consulte la Sección 3.8.3 en la página 43 y la Sección 3.8.5 en la página 45 para obtener más información sobre el montaje vertical e invertido.

- Tuerca de bloqueo interna: Se suministra una tuerca de bloqueo interna con cada tornillo de elevación, que debe apretarse cuando la máquina

esté centrada y los tornillos de elevación estén apretados según las especificaciones. La finalidad de utilizar la tuerca de bloqueo interna es ayudar a evitar que se suelte el tornillo de elevación debido a la vibración de la máquina durante el funcionamiento. Consulte la Sección 3.5.2 en la página 29.

- Placa soldada: Estas cuatro placas deben soldarse completamente a la pieza de trabajo (con una soldadura en ángulo de la longitud de cada extremo y un par de filetes cortos a lo largo de la parte delantera) con la máquina en su lugar y atornilladas a la pata del mandril de nivelación ajustable.
- Abrazadera de brida: Las abrazaderas de brida se suministran con los pernos de nivelación ajustables y están compuestas por el dedo de ajuste y la abrazadera de brida interna. Estos elementos se fijan en una superficie interior de la brida de montaje.

⚠ DANGER

No retire la grúa hasta que los tornillos de elevación estén apretados con el par de apriete especificado (441 Nm [325 pies-libras]) y al menos uno de los métodos de sujeción esté en su lugar.

3.11 INSTALACIÓN DE CABLES

⚠ WARNING

La caída o el giro de la maquinaria pueden causar lesiones graves al operador. Asegúrese de que la máquina esté fijada a la pieza de trabajo antes de conectar los cables de alimentación.

Para habilitar la conexión eléctrica, haga lo siguiente:

1. Compruebe que todos los conectores y accesorios de los cables estén limpios.
2. Reemplace cualquier pieza desgastada o dañada.
3. Compruebe que el interruptor de alimentación del conmutador principal está en la posición ABIERTO.
4. Compruebe que la parada de emergencia del mando colgante esté sin pulsar.
5. Cierre toda la alimentación.
6. Conecte el cable de control de la corriente a la caja de conexiones principal en el mando colgante de la CM6200.
7. Conecte el conducto al servomotor.
8. Fije el soporte del mosquetón a la torre de la manguera.
9. Conecte el otro extremo al panel de control de la HPU.

10. Fije la abrazadera del conducto al bastidor de la HPU.
11. Conecte todos los demás cables de control al panel eléctrico de la HPU.

NOTICE

El servomotor debe estar conectado a la HPU, pero no a la máquina. Existe el peligro de dañar el servomotor si el motor se desconecta cuando se enciende la HPU.

⚠ CAUTION

Para evitar dañar las líneas eléctricas, asegúrese de que estén libres de piezas móviles y puntos de apriete durante el funcionamiento.

12. Compruebe que no haya personal junto a la mesa giratoria.
13. Cierre el interruptor de desconexión principal de la HPU.
14. Gire y suelte el freno de emergencia en el panel de control de la HPU.
15. Gire y suelte el freno de emergencia en el mando colgante.
16. Inicie la HPU.
17. Mueva el motor del rotor para asegurarse de que el rotor gira en la dirección esperada.
18. Si es necesario cambiar la dirección, detenga el movimiento. En el caso de motores de eje accionados hidráulicamente, retire y conmute las mangueras para que la dirección del flujo sea la correcta. En el caso de motores de eje accionados eléctricamente, cambie la dirección del servosistema en el panel de control.

⚠ CAUTION

Desconectar el cable de control principal mientras está bajo tensión puede dañar los componentes eléctricos del panel principal.

4 FUNCIONAMIENTO

EN ESTE CAPÍTULO:

4.1 CONFIGURACIÓN DE FUNCIONAMIENTO -53
4.1.1 COMPROBACIONES PREVIAS AL ARRANQUE -54
4.1.2 CONFIGURACIÓN DE LA HERRAMIENTA -54
4.1.3 ENCARRILADO DEL EJE -55
4.2 MANDO COLGANTE -59
4.2.1 SISTEMAS DE COORDENADAS -59
4.2.2 VISIÓN GENERAL DE LOS CONTROLES DE LA MÁQUINA -60
4.2.3 MENÚ PRINCIPAL -64
4.2.4 CONFIGURACIÓN DE LA MÁQUINA -66
4.2.5 DESPLAZAMIENTO INCREMENTAL -67
4.2.6 DESPLAZAMIENTO ABSOLUTO -69
4.2.7 MOVIMIENTO DE VELOCIDAD INCREMENTAL -69
4.2.8 MOVIMIENTO DE VELOCIDAD ABSOLUTA -70
4.2.9 PANTALLAS EMERGENTES -72
4.2.10 PANTALLAS DE HISTORIAL DE ALARMAS -73
4.2.11 PANTALLA DE ESTADO -74
4.2.12 INFORMACIÓN DEL SISTEMA -75
4.3 FRESADO CIRCULAR -75
4.3.1 INSTALACIÓN DE LA FRESA DEL CABEZAL DE FRESADO -76
4.3.2 AJUSTE DEL DRO (EQUIPO DEL CABEZAL DE FRESADO) -76
4.3.3 RANGOS DE OPERACIÓN SEGUROS -76
4.3.4 SUSTITUCIÓN DEL CONJUNTO DE FRESADO -79
4.3.5 REALIZACIÓN DEL FRESADO CIRCULAR -80
4.4 OPCIÓN DE RECTIFICADO -81
4.4.1 DISPOSICIÓN DE LOS ADAPTADORES DE RECTIFICADO -81
4.4.2 FUNCIONAMIENTO -82
4.5 OPCIÓN DE PUNTO ÚNICO -82
4.5.1 CONFIGURACIÓN DE LA JUNTA ROTATIVA PARA MONTAJE DEL DI O EL DE - - - - - - - - - - - - - -84
4.5.1.1 CONFIGURACIÓN DEL MONTAJE DI -87
4.5.1.2 CONFIGURACIÓN DEL MONTAJE DEL DE -88
4.5.2 SUSTITUCIÓN DEL CONJUNTO DE FRESADO -90
4.5.3 MONTAJE DEL ACCIONAMIENTO HIDRÁULICO EN LA CONFIGURACIÓN DE PUNTO ÚNICO - - - - - - - -91
4.5.4 INSTALACIÓN DE LA TOLVA -92
4.5.5 INVERSIÓN DE LA DIRECCIÓN DE LA TOLVA -92
4.5.6 FUNCIONAMIENTO DEL SISTEMA DE ALIMENTACIÓN NEUMÁTICA - - - - - - - - - - - - - - - - - - -95
4.5.7 AJUSTE DE LAS CARACTERÍSTICAS DE CORTE -95
4.6 DESMONTAJE -96

4.1 CONFIGURACIÓN DE FUNCIONAMIENTO

No opere esta máquina sin la capacitación adecuada para comprender completamente la configuración, operación y procedimientos de mantenimiento seguros.

⚠ WARNING

Solo los operadores que han sido entrenados en el uso de la CM6200 deben configurar y operar la máquina. No opere esta máquina en condiciones climáticas adversas sin protección contra los elementos. Para evitar lesiones personales graves, manténgase alejado de la maquinaria en movimiento durante el funcionamiento. Tenga siempre presente la ubicación de todo el personal próximo a la máquina.

NOTICE

El servomotor debe estar conectado a la HPU, pero no a la máquina. Existe el peligro de dañar el servomotor si el motor se desconecta cuando se enciende la HPU.

4.1.1 Comprobaciones previas al arranque

⚠ WARNING

Las máquinas giratorias pueden causar lesiones graves. Apague y bloquee la máquina antes de realizar las comprobaciones previas a la operación. Durante el funcionamiento, tenga siempre presente la ubicación de todas las personas que se encuentren cerca de la máquina.

Antes de poner en marcha la máquina, compruebe siempre los siguientes puntos:

- El brazo de mecanizado y el contrapeso se fijan a la plataforma giratoria con un par de apriete de 150 Nm (110 pies-libras).

⚠ CAUTION

Compruebe que la máquina (incluido el husillo y todas las piezas móviles) pueda girar sin colisiones.

- La máquina está montada de forma segura en la pieza de trabajo.
- El husillo está fijado al brazo de mecanizado y la placa adaptadora.
- Todos los tornillos de elevación y sujeción están asegurados (apretados a 441 Nm [325 pies-libras]).
- Los cables y mangueras están asegurados lejos de la trayectoria de las piezas móviles de la máquina.
- Todos los mangos y herramientas se retiran de la máquina.
- El área está claramente marcada con una zona de seguridad.

4.1.2 Configuración de la herramienta

El cabezal de fresado tiene cuatro tornillos de encarrilado junto a los tornillos de montaje de la carcasa. Esto permite que el cabezal de fresado se separe de la placa

adaptadora para encarrilar la orientación vertical del huso. En la parte superior de la placa, dos tornillos adicionales permiten ajustar el ángulo de inclinación del cabezal de fresado.

Puesto que el cabezal de fresado está montado en un pivote central, el ángulo de este cabezal debe alinearse antes de comenzar el mecanizado. Este ajuste se realiza mediante los tornillos de ajuste de los bloques montados debajo o encima de la carcasa. Los tornillos de ajuste de rotación permiten que la carcasa gire ligeramente para lograr una orientación vertical u horizontal en relación con el brazo de mecanizado.

Para ajustar el cabezal de fresado y el eje, haga lo siguiente:

1. Afloje el bloqueo.
2. Ajuste el cabezal de fresado y el huso.
3. Utilice el DRO para posicionar el cabezal de fresado.
4. Apriete el bloqueo antes de mecanizar.

FIGURA 4-1. BLOQUEO DEL CABEZAL Y DRO

4.1.3 Encarrilado del eje

El encarrilado del huso es el proceso de orientación del huso.

NOTICE

El huso debe estar orientado perpendicularmente a la máquina herramienta y no a la pieza de trabajo, que no es un punto de referencia fiable.

Haga lo siguiente para encarrilar el huso:

1. Si está instalado el motor de accionamiento del eje, retírelo de la caja de engranajes del eje para facilitar la rotación manual de este.

2. Instale un indicador de cuadrante de base magnética en el cuerpo de la fresadora frontal (consulte la Figura 4-2).

FIGURA 4-2. INDICADOR DE CUADRANTE EN LA FRESADORA FRONTAL

TIP:

Un dispositivo de fijación en ángulo recto orientado desde el carril de deslizamiento lineal puede servir como punto de referencia perpendicular al brazo fresador.

3. Extienda el indicador hacia afuera para hacer contacto con la parte inferior de la superficie de la máquina (consulte la Figura 4-3).
4. Con el lápiz del indicador tocando la superficie, ponga el dial del indicador en «0».

FIGURA 4-3. INDICADOR TOCANDO LA SUPERFICIE DEL PISTÓN DE LA MÁQUINA

5. Gire el eje 180° hacia la superficie de ataque de la máquina (consulte la Figura 4-4).

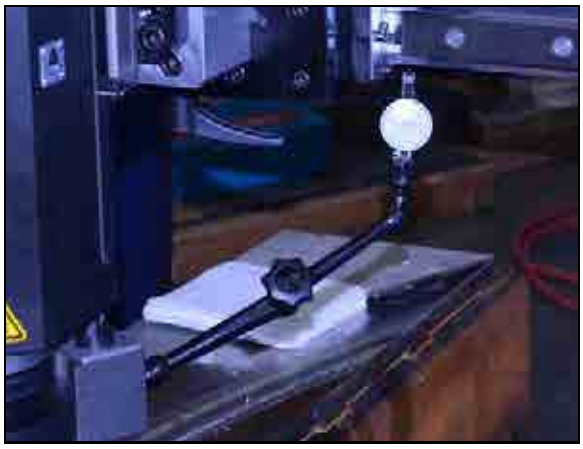

FIGURA 4-4. EJE GIRADO HACIA LA SUPERFICIE DE ATAQUE

TIP:

Con el huso estándar, el ángulo está limitado a ±1°. Si se necesita un ángulo mayor, se necesitará un adaptador de cabeza giratoria. Para más información, póngase en contacto con CLIMAX.

6. Anote la lectura del dial. Si está más de 0,001" (0,03 mm) fuera de la tolerancia de encarrilado, haga lo siguiente:
   a) Afloje los cuatro tornillos de cabeza de modo que queden ligeramente ajustados (entre 1-3 pies-libras ([1-4 Nm]), como se muestra en la Figura 4-5, de modo que los tornillos de encarrilado puedan ajustarse a la placa.

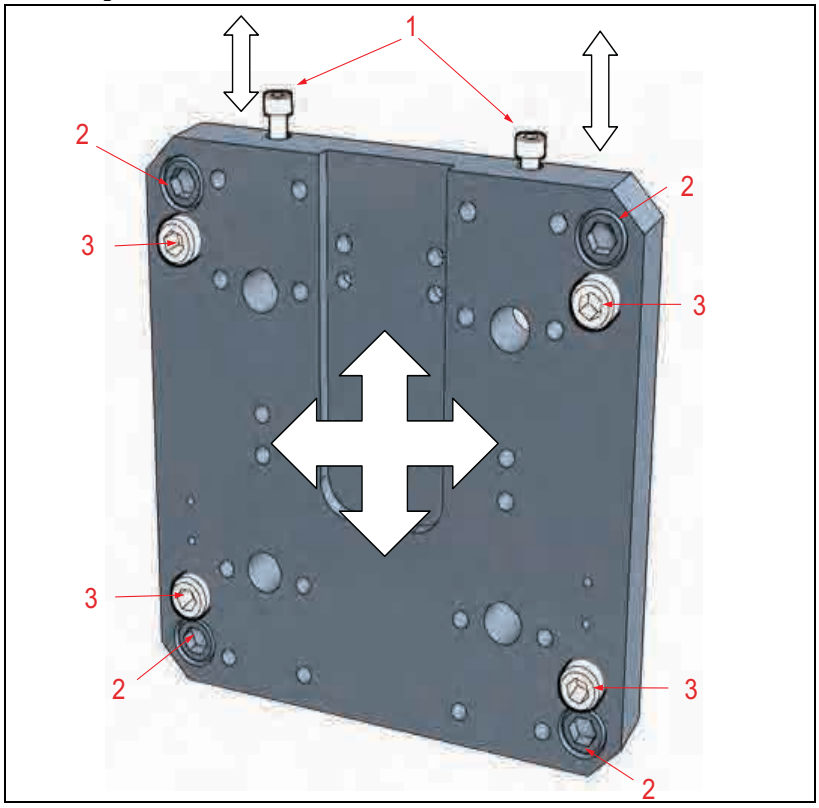

FIGURA 4-5. PLACA DE MONTAJE DEL CABEZAL DE FRESADO Y PUNTOS DE ENCARRILADO

TABLA 4-1. IDENTIFICACIÓN DE LA PLACA DE MONTAJE DEL CABEZAL DE FRESADO

Número	Componente
1	Rotación de los puntos de encarrilado de eje Y
2	Afloje primero
3	Punto de encarrilado del eje X

NOTICE

A cada lado del cabezal de fresado hay dos tornillos de cabeza cilíndrica montados en el centro de la placa de encarrilado que se muestran en la Figura 4-5..

b) Ajuste los tornillos del eje Y hasta que el indicador muestre 0,001" (0,03 mm). Consulte la Figura 4-6.

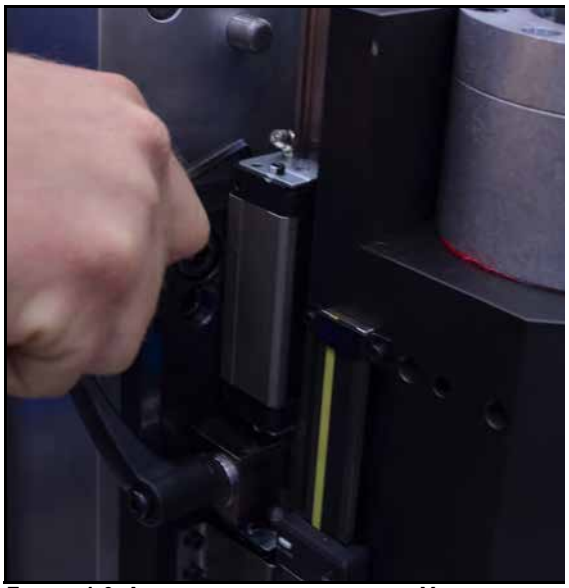

FIGURA 4-6. AJUSTE DEL TORNILLO DEL EJE Y

c) Ajuste los tornillos del eje X (donde se muestra en la Figura 4-7) hasta que el indicador marque 0,001" (0,03 mm).

7. Repita el proceso de barrido del indicador en las posiciones de 0° y 180° y ajuste la orientación del huso hasta que se obtenga la misma lectura en ambas posiciones.
8. Cuando ambos ejes estén dentro de la tolerancia, apriete los pernos de montaje a 45 pies-libras (61 Nm).

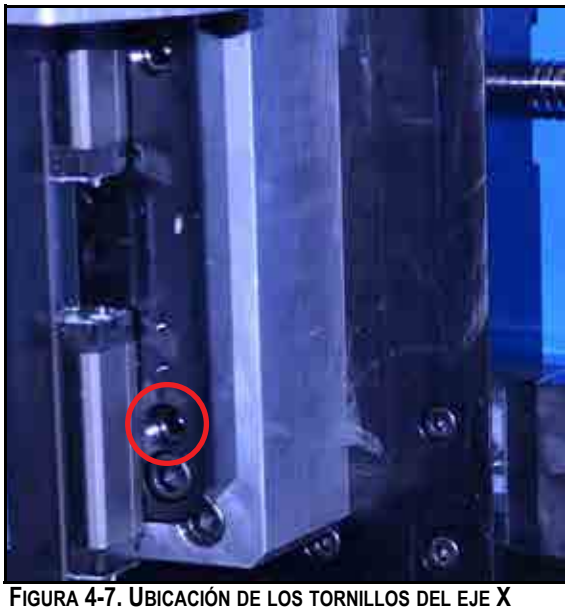

FIGURA 4-7. UBICACIÓN DE LOS TORNILLOS DEL EJE X

TIP:

Mantenga el indicador de cuadrante durante el apriete final de los tornillos de montaje, para que pueda volver a comprobar que la carcasa no se mueve durante el tensado.

9. Reinstale el motor de accionamiento del huso (si fuera necesario).

Cuando esté listo para operar la máquina, observe la superficie mecanizada después de la primera pasada.

Un patrón cruzado es el resultado óptimo, como se muestra a la derecha de la Figura 4-8.

Si los resultados son de bordes agudos, como se muestra en la parte izquierda de la Figura 4-8, ajuste los tornillos del eje X de acuerdo con el paso c de la página 59.

FIGURA 4-8. RESULTADOS DE LA PASADA DE MECANIZADO

4.2 MANDO COLGANTE

4.2.1 Sistemas de coordenadas

Esta máquina tiene dos sistemas de coordenadas separados que siguen la posición de la máquina. El punto cero se puede restablecer en cualquier momento en cualquiera de los sistemas de coordenadas sin afectar a la posición en el otro sistema.

NOTICE

La máquina responderá a las instrucciones de movimiento de forma diferente en función del sistema de coordenadas que se esté utilizando.

Coordenadas absolutas

En el sistema de coordenadas absoluto, todos los destinos de desplazamiento son relativos a una posición de cero absoluto designada. Por ejemplo: una entrada de destino de 90 grados hará que la máquina se mueva a la posición absoluta de 90 grados, independientemente de dónde se encuentre la posición actual de la máquina. La máquina terminará en la posición de 90 grados, ya sea que la dirección de movimiento esté en la dirección + o -. Se puede controlar la dirección de marcha en coordenadas absolutas.

Un movimiento de 0 a 90 grados en la dirección positiva produce 90 grados de rotación en el sentido positivo. Un movimiento de 0 a 90 grados en sentido negativo provoca 270 grados de giro en el sentido negativo, siendo la posición final la posición absoluta de 90 grados.

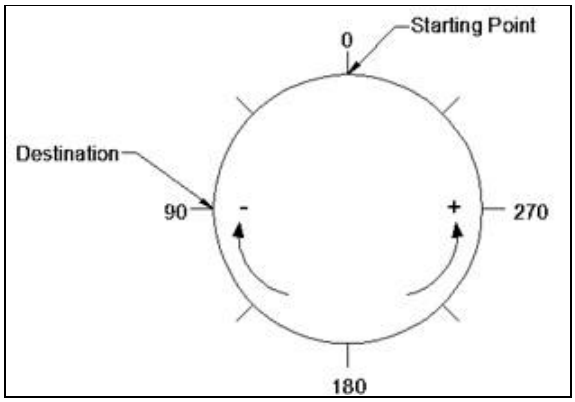

FIGURA 4-9. COORDENADAS ABSOLUTAS

Coordenadas incrementales

En el sistema de coordenadas incrementales, los incrementos de movimiento son siempre relativos a la posición actual de la máquina. Por ejemplo: si la máquina está en el punto de 180 grados con respecto al cero absoluto, un movimiento de menos 90 dará como resultado una posición absoluta final de 90 grados. Un movimiento de más 90 provocará una posición absoluta de 270 grados.

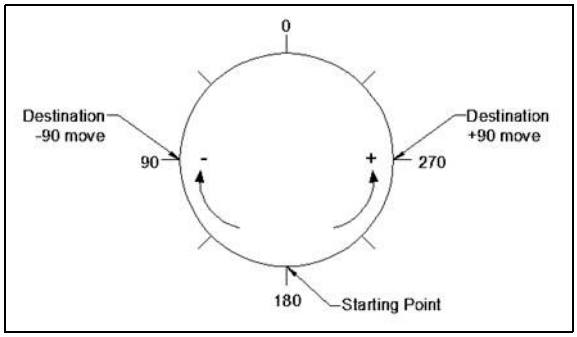

FIGURA 4-10. COORDENADAS INCREMENTALES

4.2.2 Visión general de los controles de la máquina

El mando colgante HMI es la interfaz para controlar las operaciones de la CM6200. Las siguientes pantallas le servirán para controlar y configurar las dis-

tintas funciones de la máquina. El mando colgante se muestra en la Figura 4-11 en la página 61.

FIGURA 4-11. MANDO COLGANTE CM6200

Cuando se enciende la HMI, aparecerá la pantalla que se muestra en la Figura 4-12. El ajuste predeterminado se fijará para todos los parámetros de la máquina.

FIGURA 4-12. PANTALLA DE BIENVENIDA AL INICIO

NOTICE

Los ajustes del usuario no se guardan cuando la unidad está apagada.

Después de la pantalla de bienvenida, se mostrará la pantalla de inicio (Figura 4-13 en la página 62) en la HMI. Se advierte al usuario sobre el funcionamiento de la máquina. Debe restablecer los parámetros y las conexiones pulsando el botón RESET para ir al menú principal.

FIGURA 4-13. PANTALLA DE INICIO RESTABLECER

Si el botón de parada de emergencia sigue pulsado cuando la máquina está encendida, el botón azul de arranque (RESET) no estará activo y el texto debajo del botón dará las instrucciones para arrancar.

FIGURA 4-14. PANTALLA RESTABLECER CON BOTÓN PULSADO

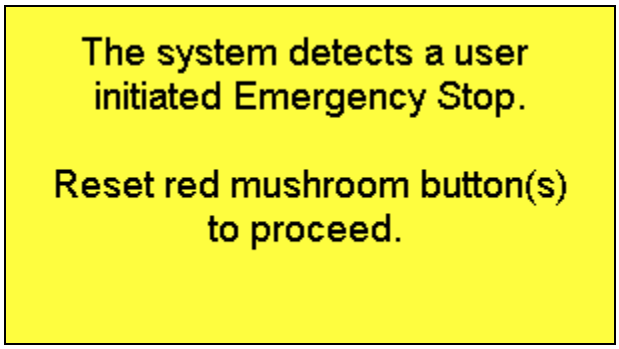

FIGURA 4-15. PANTALLA EMERGENTE DESPUÉS DE INICIARSE LA PARADA DE EMERGENCIA

Esta pantalla también aparece después de iniciarse la parada de emergencia. Después de que el operador resuelva el problema, aparecerá la pantalla de inicio del sistema.

Otros posibles fallos en el sistema se mostrarán con pantallas emergentes:

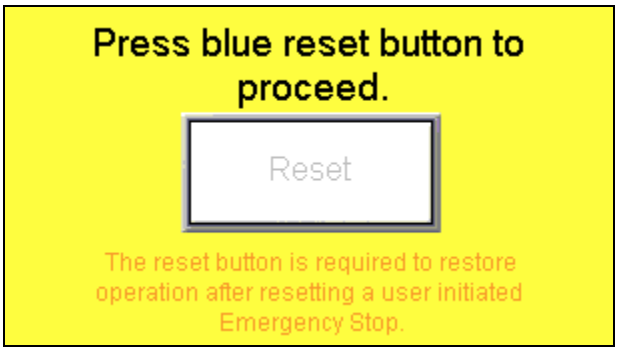

FIGURA 4-16. PANTALLA EMERGENTE PARA SOLICITAR EL RESTABLECIMIENTO

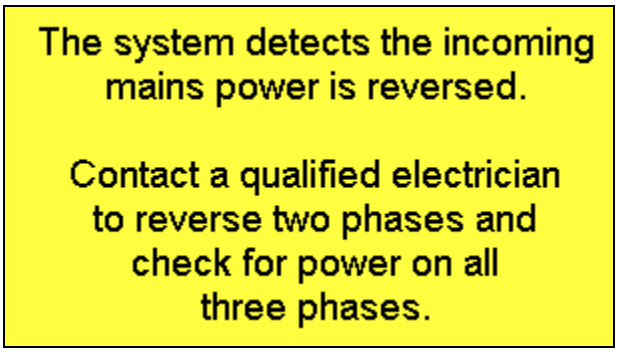

FIGURA 4-17. AVISO DE INVERSIÓN EN LA POLARIDAD

Una vez resueltos los problemas, el botón de reinicio se activará y el sistema podrá reiniciarse. Después de reiniciar el sistema, la HMI se redirige a la pantalla Menú principal.

⚠ CAUTION

¡No desconecte ningún cable del sistema mientras esté bajo tensión! Podrá provocar daños en el sistema.

⚠ WARNING

Advertencia del servomotor: no conecte ni desconecte los cables mientras la unidad esté conectada a la corriente.

4.2.3 Menú principal

La pantalla del menú principal, mostrada en la Figura 4-18, proporciona acceso a todas las pantallas principales para el funcionamiento de la máquina.

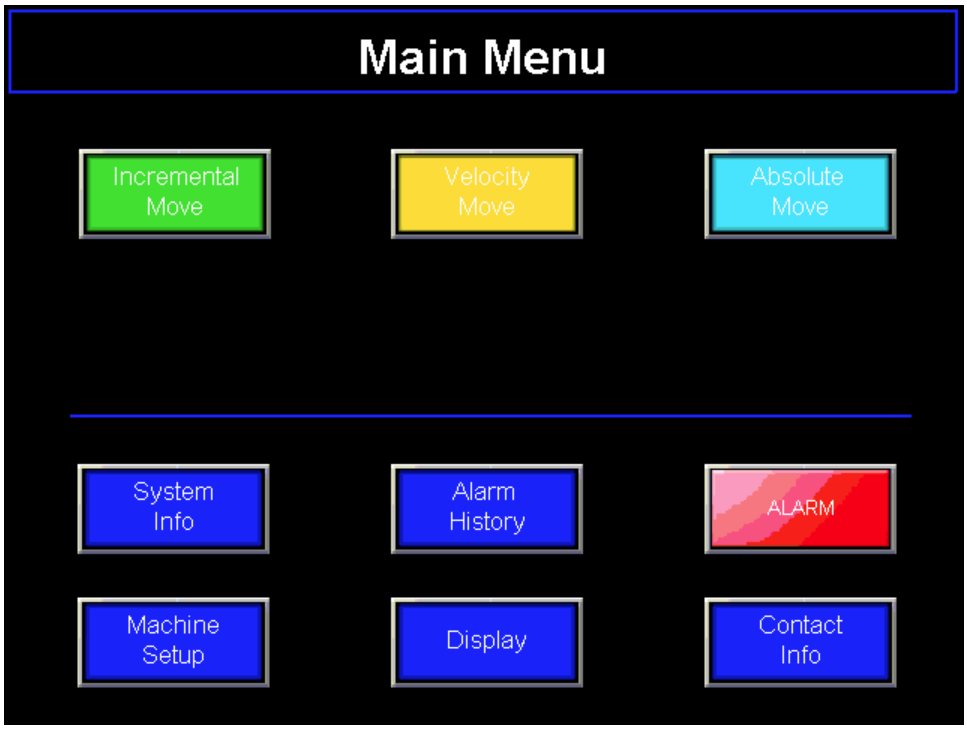

FIGURA 4-18. MENÚ PRINCIPAL SIN AVISO DE SERVOMOTOR

Todos los botones se activan con el tacto. Algunos de los botones también activarán subpantallas de entrada de datos. A continuación se ofrecen más explicaciones sobre cada pantalla.

Los botones están codificados por colores para facilitar el reconocimiento de los diferentes modos de funcionamiento. Las funciones de coordenadas incrementales se codifican con un color verde y las funciones de coordenadas absolutas se codifican con un color azul claro.

4.2.4 Configuración de la máquina

La pantalla de configuración de la máquina, mostrada en la Figura 4-19, muestra los parámetros de la máquina que pueden ser ajustados por el operador.

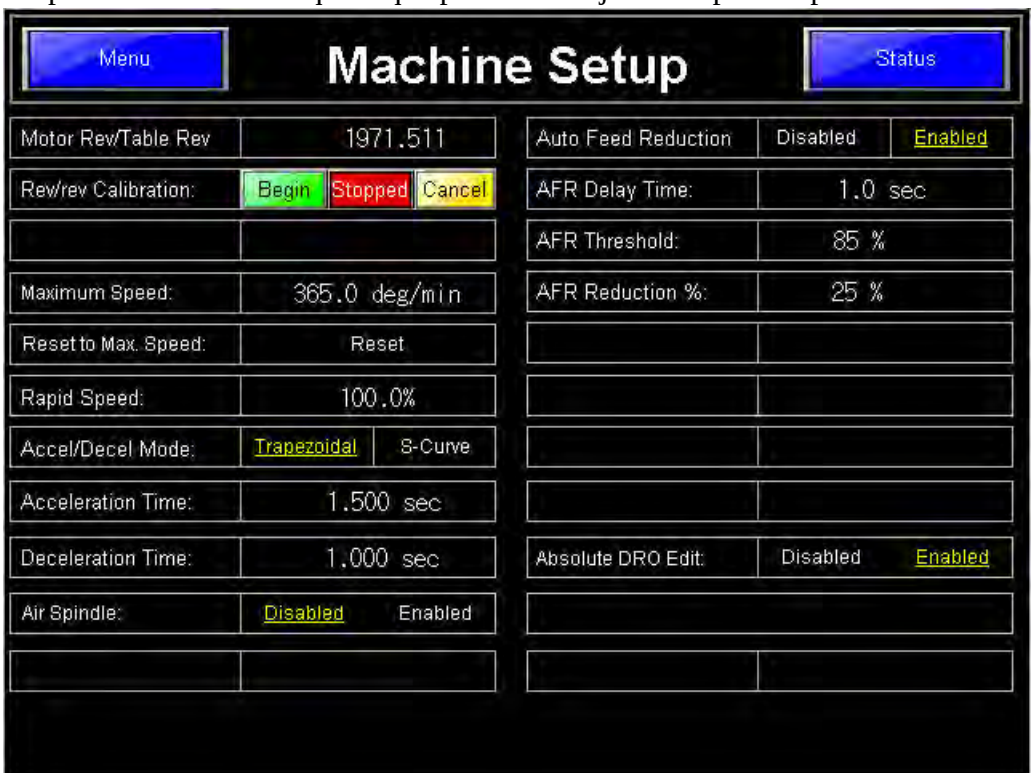

FIGURA 4-19. PANTALLA DE CONFIGURACIÓN DE LA MÁQUINA

Los ajustes estándar de fábrica de esta máquina se muestran en la Figura 4-19. No cambie los datos de Revoluciones del Motor/Tabla de Revoluciones, ya que estos datos se basan en la relación de transmisión total real de esta máquina.

La velocidad rápida se ajusta en esta pantalla. Esta característica está disponible en otras pantallas, pero se edita aquí.

La reducción automática de alimentación (AFR) está HABILITADA de forma predeterminada. Esta característica ayuda a proteger la máquina de sufrir daños por una sobrecarga. Si la máquina encuentra resistencia de puntos altos u otras irregularidades durante el mecanizado que empujan más allá del ajuste AFR THRESHOLD, el sistema contará para el AFR DELAY TIME y reducirá automáticamente el avance en el porcentaje de AFR REDUCTION % especificado. Si la resistencia sigue presente, el sistema continuará supervisándola en los intervalos de AFR DELAY TIME y seguirá reduciendo la alimentación en el AFR REDUCTION % cada vez. El operario puede devolver la máquina a la velocidad normal desde el mando colgante.

Al tocar cualquiera de los campos numéricos, aparecerá la siguiente pantalla de entrada (Figura 4-20). Introduzca los datos necesarios y pulse INTRO.

FIGURA 4-20. TECLADO DE ENTRADA DEL NÚMERO DE CONFIGURACIÓN DE LA MÁQUINA

Todos los ajustes de esta página se mantienen en la memoria permanente aunque la máquina esté desconectada de la corriente.

Si alguno de los parámetros de configuración no se ha configurado con un número válido, se mostrará el mensaje mostrado en la Figura 4-21. Confirme esta ventana emergente pulsando el botón OK e introduzca los datos necesarios en la pantalla SETUP.

FIGURA 4-21. PANTALLA DE VERIFICACIÓN DE PARÁMETROS DE CONFIGURACIÓN

4.2.5 Desplazamiento incremental

La pantalla de desplazamiento incremental, mostrada en la Figura 4-22, permite controlar las operaciones de la CM6200 según un sistema de coordenadas incre-

mental.

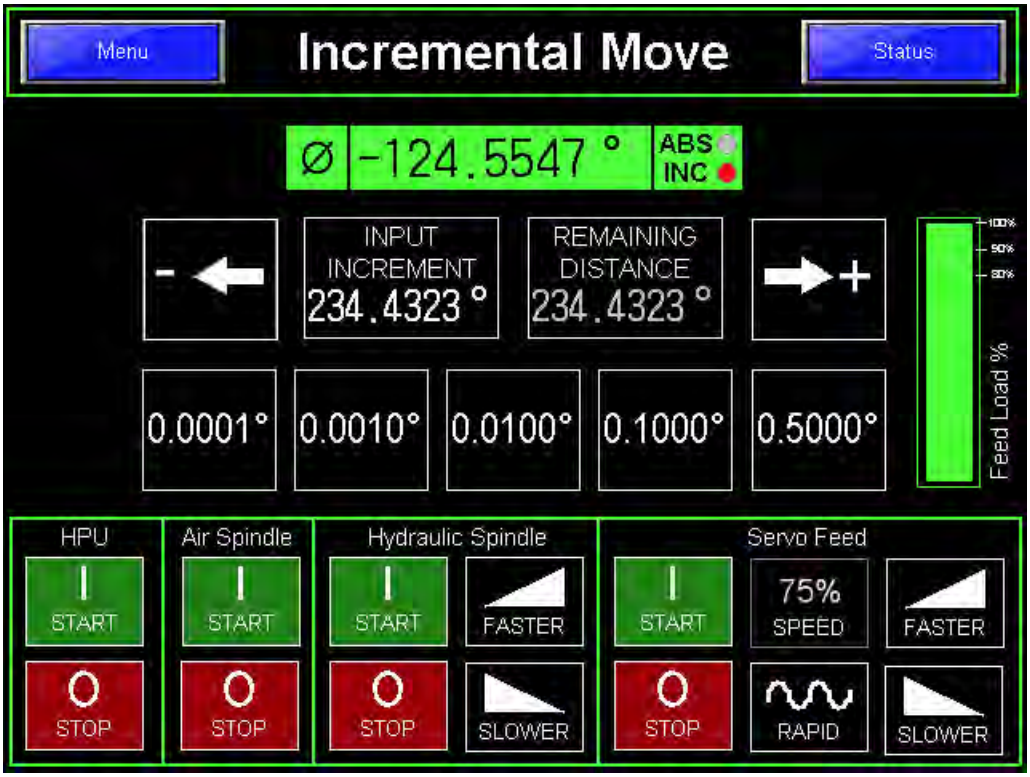

FIGURA 4-22. PANTALLA DE DESPLAZAMIENTO INCREMENTAL

Los movimientos incrementales son relativos a la posición actual, en la dirección y velocidad que introduzca.

Un desplazamiento incremental será siempre la distancia introducida en el campo «Incremento de entrada», y en el sentido y velocidad seleccionados.

NOTICE

En función de la configuración solicitada de las opciones de la CM6200, solo determinadas funciones estarán habilitadas y visibles. Como resultado, es posible que algunas de las funciones mostradas anteriormente no estén disponibles en el mando colgante.

4.2.6 Desplazamiento absoluto

La pantalla de desplazamiento absoluto, mostrada en la Figura 4-23, permite controlar las operaciones de la CM6200 según un sistema de coordenadas absoluto.

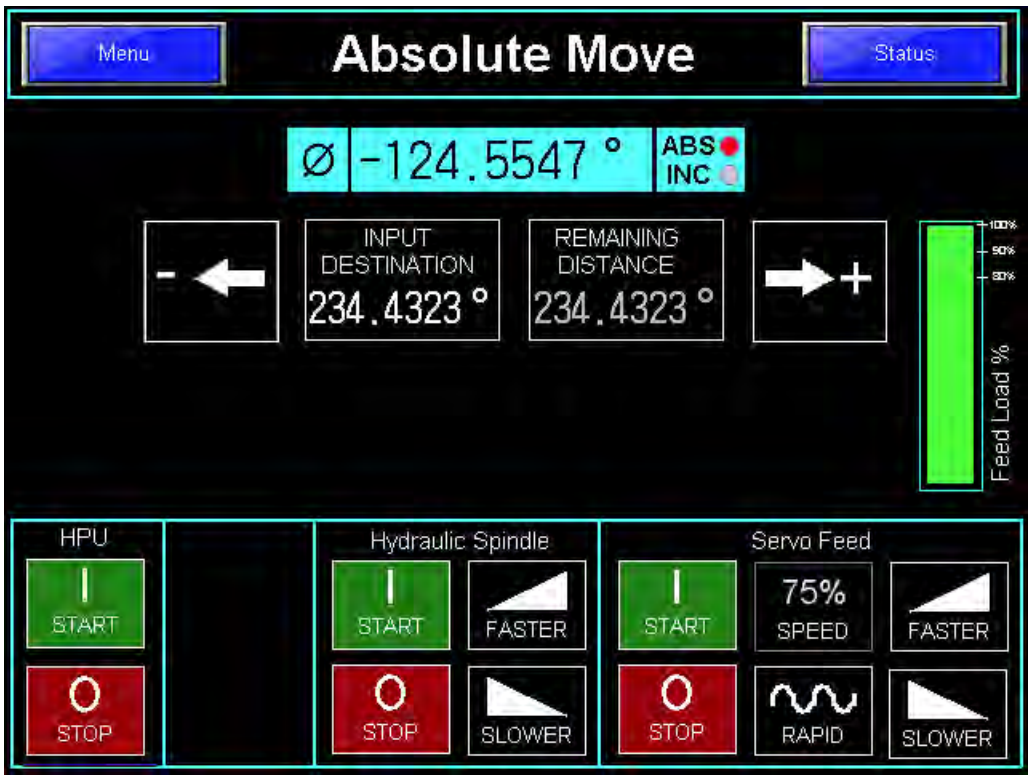

FIGURA 4-23. PANTALLA DE MOVIMIENTO ABSOLUTO

Los movimientos absolutos se producen con respecto a la posición cero absoluta, que puede ser cualquier lugar a lo largo de la circunferencia de un círculo de 360 grados. Sin confundirlo con los movimientos incrementales, el movimiento absoluto se desplazará al destino introducido, en la dirección y velocidad especificadas, en relación con la posición CERO.

NOTICE

En función de la configuración solicitada de las opciones de la CM6200, solo determinadas funciones estarán habilitadas y visibles. Como resultado, es posible que algunas de las funciones mostradas anteriormente no estén disponibles en el mando colgante.

4.2.7 Movimiento de velocidad incremental

La pantalla de movimiento de velocidad incremental, mostrada en la Figura 4-24, permite controlar el movimiento de la CM6200 en función del porcentaje de la

velocidad máxima.

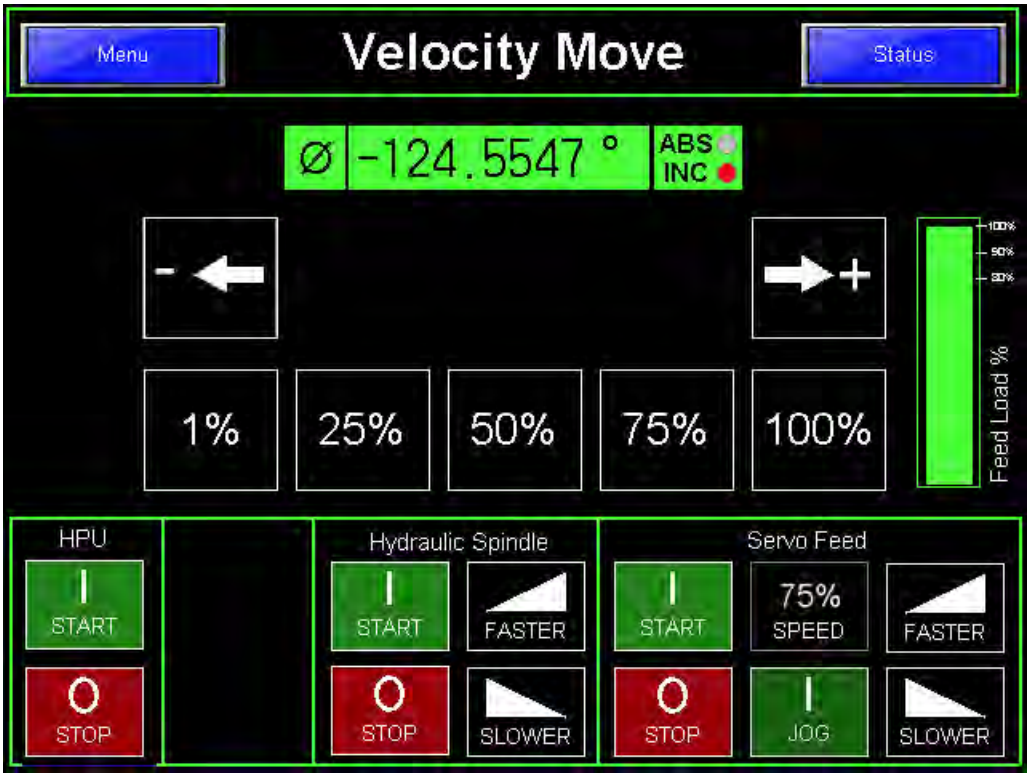

FIGURA 4-24. PANTALLA DE MOVIMIENTO DE VELOCIDAD INCREMENTAL

Observe el código de color y el punto de identificación para las pantallas de movimiento de incremento con respecto a las de movimiento de velocidad absoluta. Para desplazarse a cualquier posición de forma incremental, mantenga pulsada la tecla de JOG o pulse la tecla de inicio.

⚠ WARNING

En función de la configuración solicitada de las opciones de la CM6200, solo determinadas funciones estarán habilitadas y visibles. Como resultado, es posible que algunas de las funciones mostradas anteriormente no estén disponibles en el mando colgante.

4.2.8 Movimiento de velocidad absoluta

La pantalla de movimiento de velocidad absoluta, mostrada en la Figura 4-25, permite controlar el movimiento de la CM6200 en función del porcentaje de la veloci-

dad máxima.

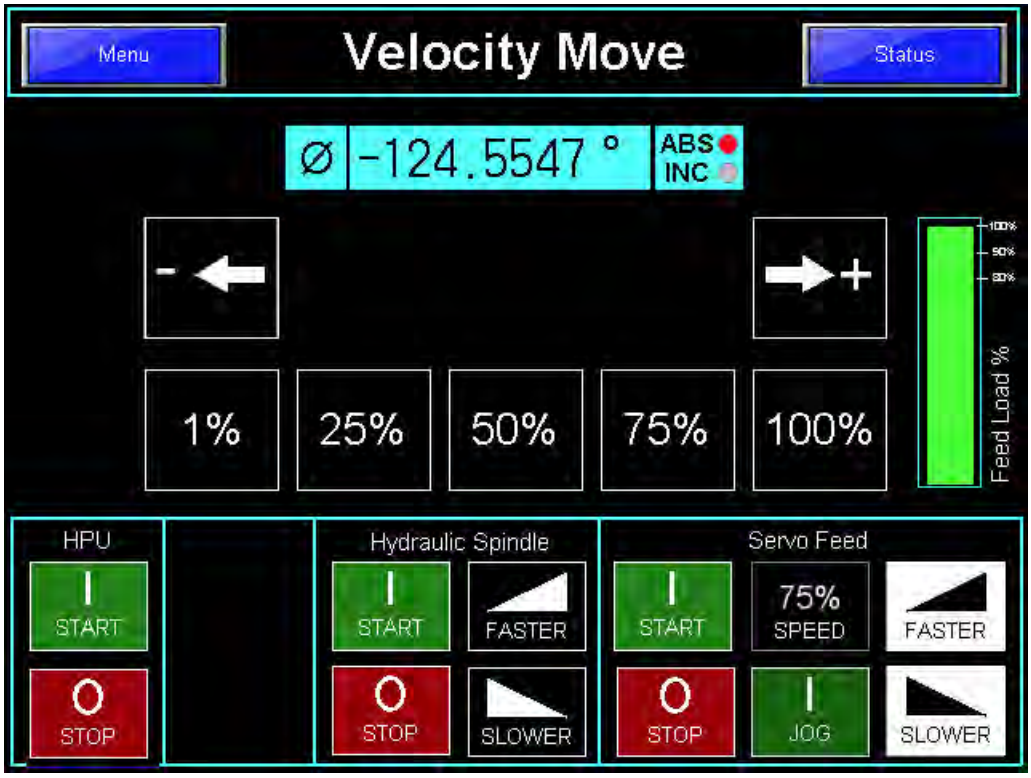

FIGURA 4-25. PANTALLA DE MOVIMIENTO DE VELOCIDAD ABSOLUTA

Observe el color y el punto de identificación de las coordenadas absolutas. La función es la misma que la de la pantalla incremental, pero el desplazamiento será en relación al cero absoluto.

NOTICE

En función de la configuración solicitada de las opciones de la CM6200, solo determinadas funciones estarán habilitadas y visibles. Como resultado, es posible que algunas de las funciones mostradas anteriormente no estén disponibles en el mando colgante.

4.2.9 Pantallas emergentes

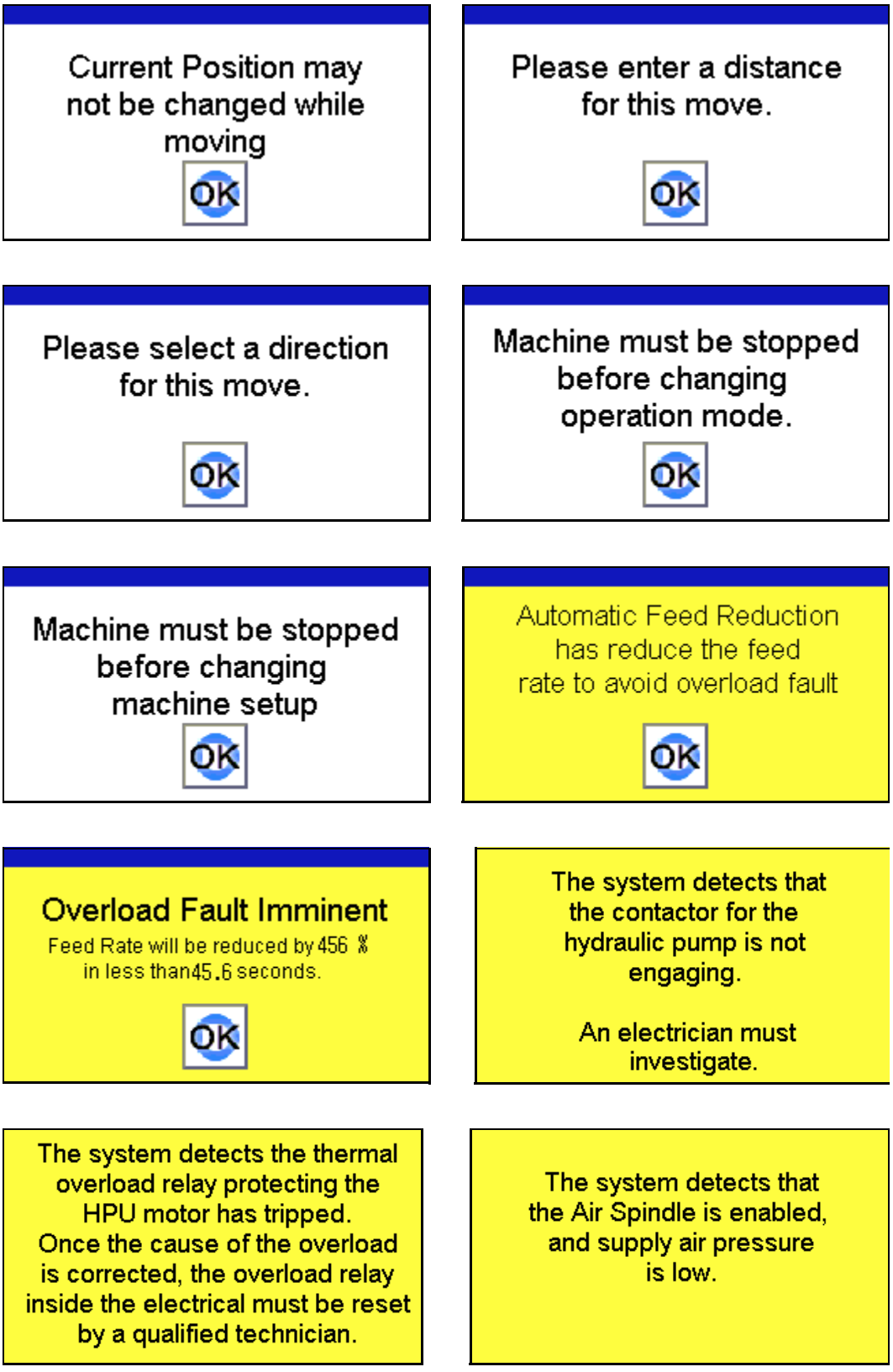

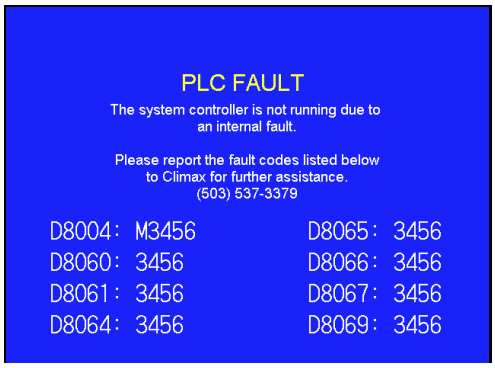

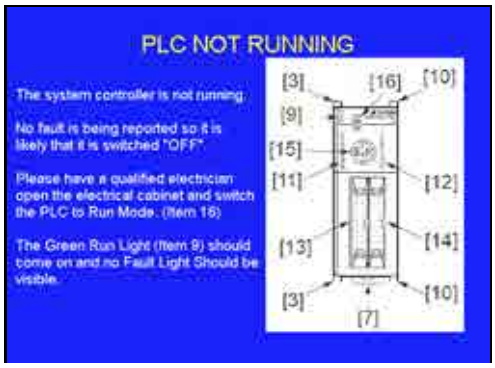

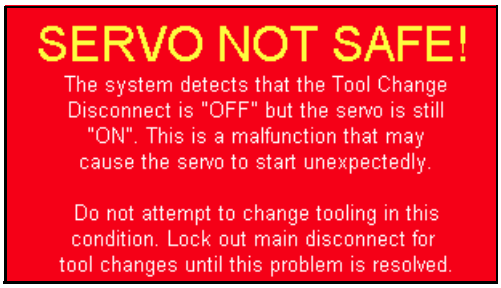

4.2.10 Pantallas de historial de alarmas

4.2.11 Pantalla de estado

La pantalla de estado, mostrada en la Figura 4-26, muestra el estado actual de los componentes de la CM6200.

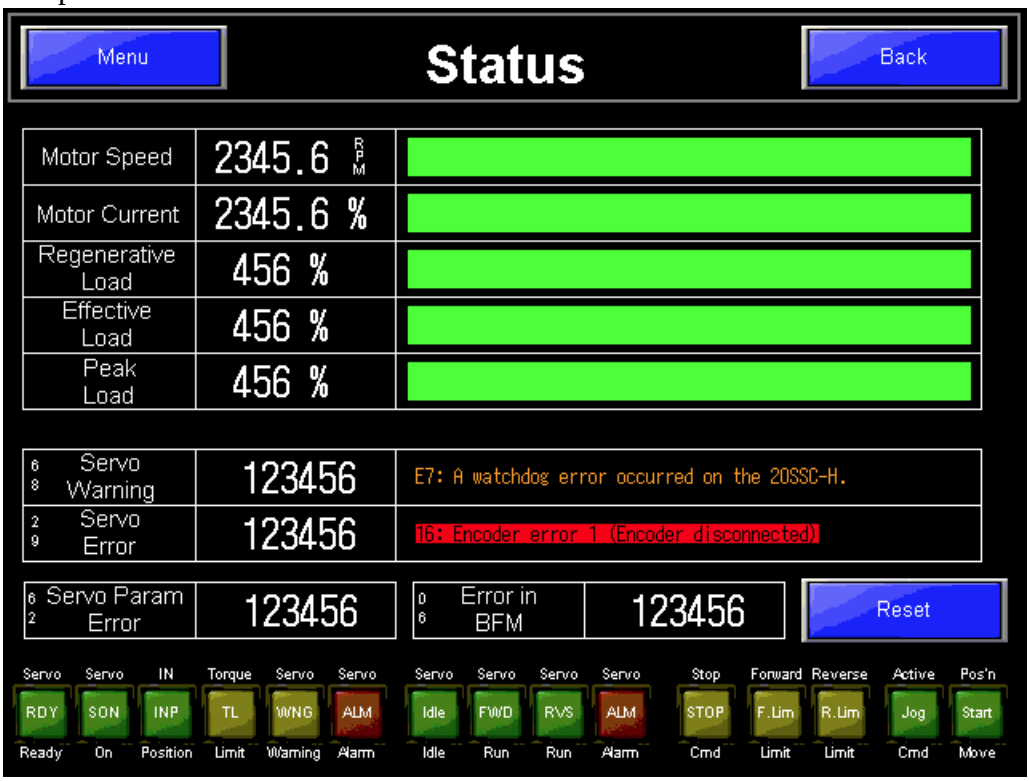

FIGURA 4-26. PANTALLA DE ESTADO

Normalmente, la pantalla de estado solo se utiliza para la resolución de problemas o cuando se pone en contacto con CLIMAX para obtener ayuda en caso de problemas.

NOTICE

En función de la configuración solicitada de las opciones de la CM6200, solo determinadas funciones estarán habilitadas y visibles. Como resultado, es posible que algunas de las funciones mostradas anteriormente no estén disponibles en el mando colgante.

4.2.12 Información del sistema

La pantalla de información del sistema, mostrada en la Figura 4-27, muestra información sobre el funcionamiento y la identificación de la máquina.

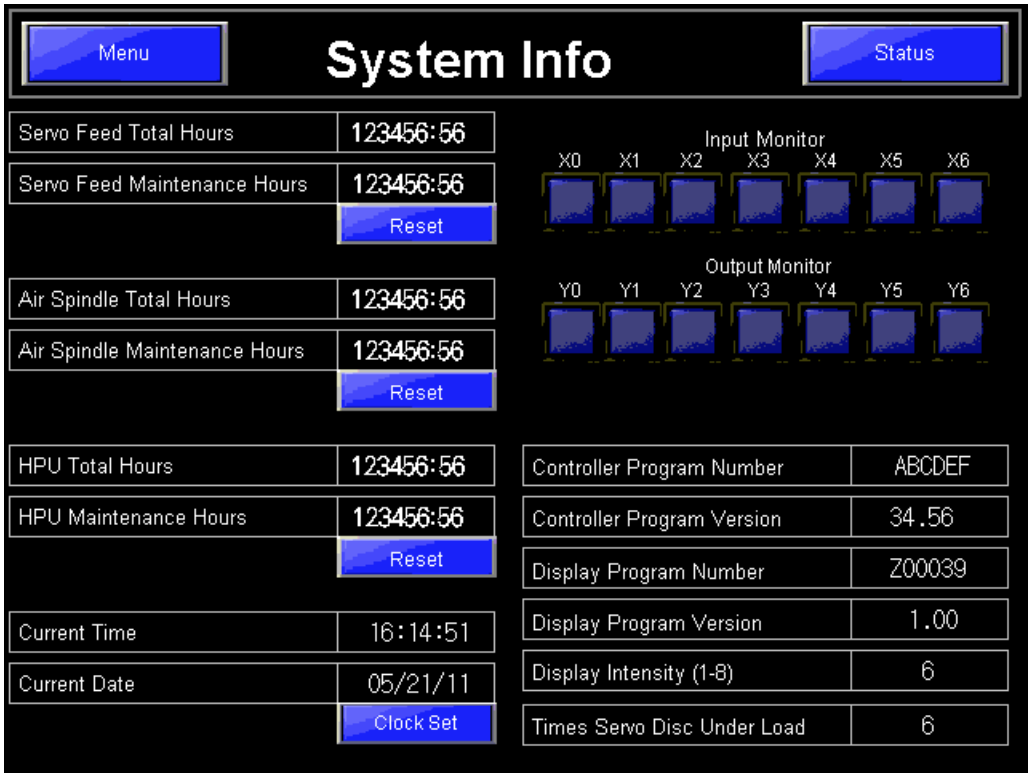

FIGURA 4-27. PANTALLA DE INFORMACIÓN DEL SISTEMA

NOTICE

En función de la configuración solicitada de las opciones de la CM6200, solo determinadas funciones estarán habilitadas y visibles. Como resultado, es posible que algunas de las funciones mostradas anteriormente no estén disponibles en el mando colgante.

4.3 FRESADO CIRCULAR

⚠ WARNING

Antes del mecanizado, realice una inspección visual y una revisión del área de configuración. Asegúrese de que se han adoptado todas las medidas necesarias para evitar el bloqueo accidental de las piezas giratorias. Las obstrucciones en el mecanizado rotativo o en el ensamblaje del contrapeso y el cabezal de fresado son un peligro para la seguridad de las operaciones de mecanizado y pueden ocasionar lesiones graves o la muerte.

4.3.1 Instalación de la fresa del cabezal de fresado

Para instalar la fresa del cabezal de fresado, haga lo siguiente:

1. Compruebe que la fresa esté afilada y exenta de mellas.
2. Compruebe que el huso está completamente parado y que la alimentación de la máquina está bloqueada.
3. Limpie la suciedad y las virutas de la superficie del eje cónico.
4. Inserte la fresa en el huso. Asegúrese de que la fresa esté enganchada a las lengüetas de accionamiento.
5. Instale el perno de tracción para asegurar la fresa en el eje.

4.3.2 Ajuste del DRO (equipo del cabezal de fresado)

Para la mayoría de las operaciones, basta con encender el visualizador y pulsar el botón ZERO/ ABS para poner a cero la pantalla antes de realizar cualquier ajuste en el cabezal de fresado. El DRO mostrará las distancias correctas en la lectura digital (consulte la Figura 4-28).

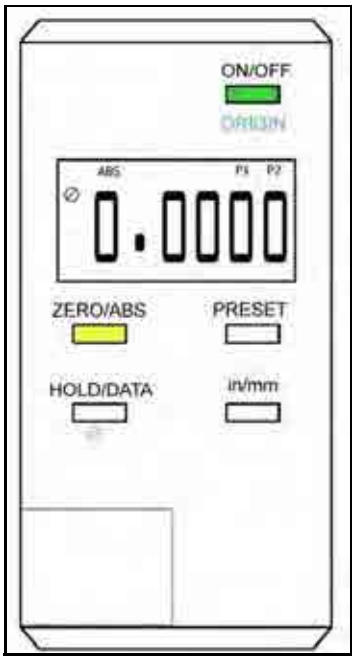

FIGURA 4-28. BOTONES Y PANTALLA DEL DRO

4.3.3 Rangos de operación seguros

En la Tabla 4-2 en la página 77 se muestran los pies de superficie por minuto (sfpm) y los metros de superficie por minuto (smpm) para un determinado diámetro de herramienta y tamaño de motor hidráulico a 60 Hz y 20 galones por minuto (gpm) o 76 litros por minuto (lpm). La Tabla 4-3 en la página 78 muestra la misma información a 50 Hz y 16,6 gpm (63 lpm).

⚠ CAUTION

No escoja una combinación de motor y herramienta inferior a 150 sfpm (45,72 smpm) a 20 gpm (76 lpm). La fuerza máxima resultante en la cortadora podría dañar la máquina. Es aceptable hacer funcionar una herramienta a menos de 150 sfpm (45,72 smpm), siempre que a 20 gpm (76 lpm) sea mayor que 150 sfpm (45,72 smpm).

Si el operador decide hacer funcionar la máquina más allá de las limitaciones de diseño, lo hace bajo su propia responsabilidad.

TABLA 4-2. MÁXIMO SFPM/SMPM POSIBLE DESDE EL MOTOR HIDRÁULICO A 60 HZ Y 20 GPM (76 LPM)

Diámetro de herramientas	Tamaños de motor hidráulico opcionales							
	6,2 cu-in (101,6 cu-cm)	8 cu-in (131 cu-cm)	9,6 cu-in (157,3 cu-cm)	11,9 cu-in (195 cu-cm)	14,9 cu-in (244,17 cu-cm)	18,7 cu-in (244,2 cu-cm)	24 cu-in (393,3 cu-cm)	29,8 cu-in (488,3 cu-cm)
1" (25 mm)	194 sfpm (59,1 smpm)	151 sfpm (46 smpm)	125 sfpm (38,1 smpm)	101 sfpm (30,8 smpm)	81 sfpm (24,7 smpm)	64 sfpm (24,7 smpm)	50 sfpm (15,2 smpm)	40 sfpm (12,2 smpm)
2" (51 mm)	389 sfpm (118,6 smpm)	302 sfpm (92,1 smpm)	250 sfpm (76,2 smpm)	202 sfpm (61,6 smpm)	161 sfpm (49,1 smpm)	129 sfpm (39,3 smpm)	100 sfpm (30,5 smpm)	80 sfpm (24,4 smpm)
4" (102 mm)	777 sfpm (236,8 smpm)	603 sfpm (183,8 smpm)	500 sfpm (152,4 smpm)	403 sfpm (122,8 smpm)	323 sfpm (98,5 smpm)	258 sfpm (78,6 smpm)	200 sfpm (61 smpm)	160 sfpm (48,8 smpm)
5" (127 mm)	971 sfpm (296 smpm)	754 sfpm (229,8 smpm)	624 sfpm (190,2 smpm)	504 sfpm (153,6 smpm)	403 sfpm (122,8 smpm)	322 sfpm (98,2 smpm)	250 sfpm (76,2 smpm)	200 sfpm (61 smpm)
6" (152 mm)	1166 sfpm (355,4 smpm)	905 sfpm (275,8 smpm)	749 sfpm (228,3 smpm)	605 sfpm (184,4 smpm)	484 sfpm (147,5 smpm)	386 sfpm (117,7 smpm)	300 sfpm (91,4 smpm)	240 sfpm (73,2 smpm)
8" (203 mm)	1554 sfpm (473,7 smpm)	1 206 sfpm (367,6 smpm)	905 sfpm (275,8 smpm)	806 sfpm (245,7 smpm)	645 sfpm (196,6 smpm)	515 sfpm (157 smpm)	400 sfpm (121,9 smpm)	320 sfpm (97,5 smpm)
10" (254 mm)	1943 sfpm (592,2 smpm)	1508 sfpm (459,6 smpm)	1 206 sfpm (367,6 smpm)	1008 sfpm (307,2 smpm)	806 sfpm (245,7 smpm)	644 sfpm (196,3 smpm)	500 sfpm (152,4 smpm)	401 sfpm (122,2 smpm)

TABLA 4-3. MÁXIMO SFPM/SMPM POSIBLE DESDE EL MOTOR HIDRÁULICO A 50 HZ Y 16,6 GPM (63 LPM)

Diámetro de herramientas	Tamaños de motor hidráulico opcionales							
	8 cu-in (131 cu-cm)	9,6 cu-in (157,3 cu-cm)	11,9 cu-in (195 cu-cm)	14,9 cu-in (244,17 cu-cm)	18,7 cu-in (244,2 cu-cm)	24 cu-in (393,3 cu-cm)	29,8 cu-in (488,3 cu-cm)	6,2 cu-in (101,6 cu-cm)
1" (25 mm)	161 sfpm (49,1 smpm)	125 sfpm (38,1 smpm)	104 sfpm (31,7 smpm)	84 sfpm (25,6 smpm)	67 sfpm (20,4 smpm)	53 sfpm (16,2 smpm)	41 sfpm (12,5 smpm)	33 sfpm (10,1 smpm)
2" (51 mm)	323 sfpm (98,5 smpm)	251 sfpm (76,5 smpm)	208 sfpm (63,4 smpm)	168 sfpm (51,2 smpm)	134 sfpm (40,8 smpm)	108 sfpm (32,9 smpm)	83 sfpm (25,3 smpm)	66 sfpm (20,1 smpm)
4" (102 mm)	645 sfpm (196,6 smpm)	500 sfpm (152,4 smpm)	415 sfpm (126,49 smpm)	334 sfpm (101,8 smpm)	268 sfpm (81,7 smpm)	214 sfpm (65,2 smpm)	166 sfpm (50,6 smpm)	133 sfpm (40,5 smpm)
5" (127 mm)	806 sfpm (245,7 smpm)	626 sfpm (109,8 smpm)	518 sfpm (157,9 smpm)	418 sfpm (127,4 smpm)	334 sfpm (101,8 smpm)	267 sfpm (81,4 smpm)	208 sfpm (63,4 smpm)	166 sfpm (50,6 smpm)
6" (152 mm)	968 sfpm (295,1 smpm)	751 sfpm (228,9 smpm)	622 sfpm (189,6 smpm)	502 sfpm (153 smp m)	402 sfpm (122,5 smpm)	320 sfpm (97,5 smpm)	249 sfpm (75,9 smpm)	199 sfpm (60,7 smpm)
8" (203 mm)	1290 sfpm (393,2 smpm)	1001 sfpm (305,1 smpm)	751 sfpm (228,9 smpm)	669 sfpm (203,9 smpm)	535 sfpm (163,1 smpm)	427 sfpm (130,2 smpm)	332 sfpm (101,2 smpm)	266 sfpm (81,1 smpm)
10" (254 mm)	1613 sfpm (491,6 smpm)	1252 sfpm (381,6 smpm)	1001 sfpm (305,1 smpm)	837 sfpm (255,1 smpm)	669 sfpm (203,9 smpm)	551 sfpm (167,9 smpm)	415 sfpm (126,5 smpm)	333 sfpm (101,5 smpm)

Los colores mostrados corresponden a las definiciones de la Tabla 4-4.

TABLA 4-4. DEFINICIONES DE COLOR DEL RANGO DE OPERACIÓN

SFPM/SMPM	Definición
<150 sfpm (45,7 smpm)	No operar
150–250 sfpm (45,7–76,2 smpm)	Se puede operar
250–500 sfpm (76,2–152,4 smpm)	Rango de operación óptimo
> 500 sfpm (152,4 smpm)	Se puede operar

4.3.4 Sustitución del conjunto de fresado

Proceda de la siguiente manera para sustituir el conjunto de fresado por el conjunto de cabezal de herramienta de un solo punto:

1. Desconecte completamente la corriente y apague la fuente de alimentación.
2. Retire el conjunto del cabezal de fresado, incluida la placa adaptadora del cabezal de fresado, de la placa de deslizamiento transversal (consulte la Figura 4-38, que también se muestra en la Figura A-11 de la página 130).
3. Fije el conjunto de cabezal de la herramienta de un solo punto (N/P 62984) a la placa de deslizamiento transversal.

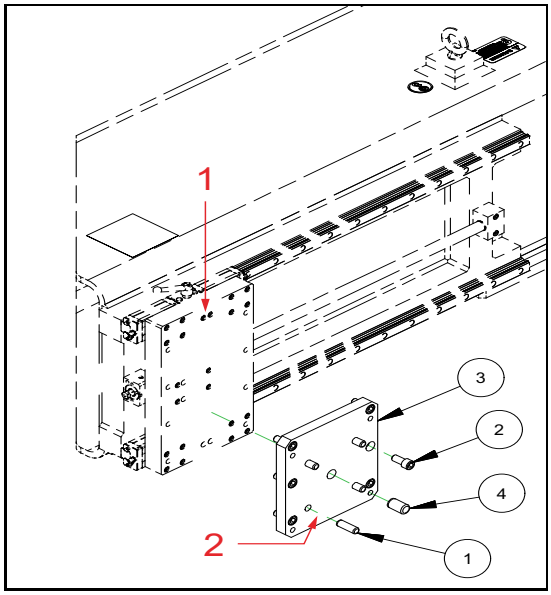

FIGURA 4-29. PLACA DE DESLIZAMIENTO TRANSVERSAL

TABLA 4-5. IDENTIFICACIÓN DE LA PLACA DE DESLIZAMIENTO TRANSVERSAL

Número	Componente
1	Placa de sillín
2	Placa adaptadora del cabezal de fresado

4. Monte el conjunto del cabezal de la herramienta al adaptador (consulte la Figura 4-39, que se muestra en Figura A-27 de la página 146).

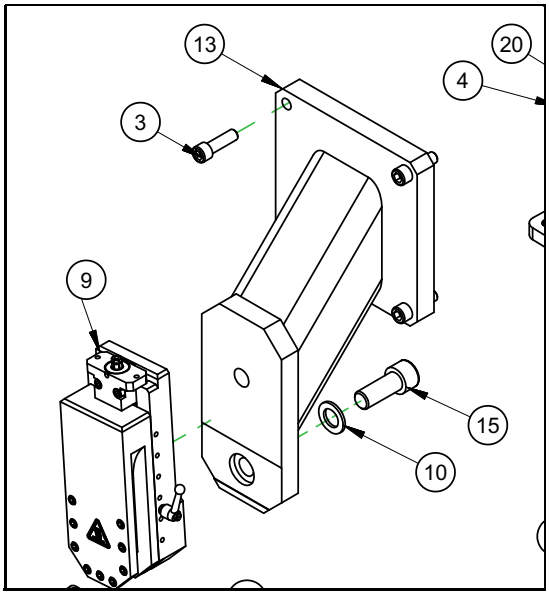

FIGURA 4-30. ADAPTADOR PARA EL CONJUNTO DEL CABEZAL DE LA HERRAMIENTA

4.3.5 Realización del fresado circular

El mecanizado en ambos sentidos es posible con un fresado de rectificado de brida general. Se recomienda realizar una pasada en un sentido y la siguiente en sentido contrario.

⚠ CAUTION

Si las condiciones o las herramientas requieren que todas las pasadas se hagan en una sola dirección, entonces retire el eje al final de cada una o dos de ellas e invierta la mesa para evitar que las mangueras y los cables eléctricos se tuerzan y se doblen excesivamente.

Para realizar el fresado circular, proceda de la siguiente manera:

1. Coloque el eje sobre la pieza en el punto de partida deseado.
2. Ponga a cero la velocidad de la mesa giratoria.
3. Arranque la plataforma giratoria y ajuste la velocidad de fresado deseada.
4. Detenga la mesa.
5. Avance el eje hacia el trabajo hasta que la fresa haga contacto con la superficie. Reinicie el DRO.
6. Separe el eje de la pieza para que no deje de estar sobre la superficie que se va a mecanizar.
7. Ajuste el eje para determinar la profundidad de fresado deseada.
8. Encienda la máquina e inicie el giro del eje.
9. Lleve la fresa radialmente en la pieza de trabajo mediante el avance radial del eje.
10. Cuando la cortadora esté funcionando a pleno rendimiento, inicie la rotación de la mesa giratoria.

⚠ CAUTION

Nunca detenga el eje hasta que la mesa giratoria esté completamente parada. Si se detiene el eje antes de detener la mesa giratoria, se dañará la máquina.

TIP:

Es posible que sea necesario retirar los dedos de ajuste durante el fresado.

⚠ DANGER

Quitar los dedos de ajuste de la máquina reducirá la estabilidad de ésta. Asegúrese de que la máquina está fijada a la pieza de trabajo de

acuerdo con las especificaciones que se indican en la Sección 3.4 de la página 25 antes de retirar los dedos de ajuste.

11. Ajuste el pulsador de velocidad del mando colgante hasta que la plataforma giratoria gire a la velocidad necesaria.

⚠ WARNING

Para protegerse de las virutas que salten, use protección ocular mientras opera la máquina.

12. Para detener la rotación de la máquina, presione el botón de parada del mando colgante de la fresadora circular.
13. Repita las pasadas de fresado según sea necesario. Para acabados muy finos haga varios fresados gruesos y un corte de acabado fino.

Mueva la fresadora radialmente fuera de la pieza de trabajo entre operaciones o cuando el fresado se haya completado.

4.4 OPCIÓN DE RECTIFICADO

4.4.1 Disposición de los adaptadores de rectificado

El adaptador de rectificado utiliza el mismo adaptador de montaje que la opción de herramienta de un solo punto. Consulte las vistas de despiece (Figura A-16 de la página 135, Figura A-17 de la página 136 o Figura A-18 de la página 137) para obtener más información sobre las piezas necesarias para el rectificado.

Haga lo siguiente para configurar el adaptador de rectificado:

1. Coloque la máquina en la brida, de acuerdo con las instrucciones de montaje de la Sección 3.4 de la página 25.
2. Instale el cabezal de rectificado en el brazo (consulte la Sección 4.5.2 en la página 89 para ver las instrucciones sobre cómo sustituir el cabezal de fresado).
3. Utilice los tornillos suministrados para fijar la rectificadora a la parte frontal del cabezal de la herramienta.
4. Conecte las mangueras del adaptador de rectificado a la PCU.

NOTICE

Haga un máximo de dos o tres pasadas en cada dirección. A continuación, invierta la dirección para evitar que se atasquen las mangueras.

5. Ajuste los tornillos de nivelación hasta que se alcance el ángulo de rectificado deseado (Figura 4-31).
6. Utilice el tornillo de ajuste de altura en el cabezal de rectificado para ajustar la altura.
7. Compruebe que la protección esté en su sitio y que todos los tornillos estén bien apretados.

FIGURA 4-31. TORNILLOS NIVELADORES DEL CABEZAL DE RECTIFICADO

4.4.2 Funcionamiento

El rectificado debe realizarse después de haber cortado la brida plana con una herramienta de un solo punto o con el cabezal de rectificado.

1. Encienda el cabezal de rectificado y fije la rampa a la velocidad de operación deseada.
2. Ajuste el eje para que toque la superficie y haga un ligero rectificado.
3. Compruebe el acabado de la superficie.
4. Realice los ajustes necesarios en los ajustes de la rectificadora.
5. Cuando el acabado sea satisfactorio, continúe rectificando la superficie según sea necesario.

⚠ WARNING

Manténgase alejado de la rectificadora durante el funcionamiento. Pueden salir virutas de metal lanzadas al aire desde la rectificadora. Use protección ocular cuando opere la máquina.

6. Cuando termine el rectificado, levante el eje y apague la rectificadora.

4.5 OPCIÓN DE PUNTO ÚNICO

Como se muestra en Figura 4-32 en la página 84, la opción de un solo punto requiere un adaptador y un conjunto de cabezal de herramienta, además de los sistemas neumáticos para el control del avance. Este adaptador se monta directamente en el

brazo de la herramienta existente. Consulte también la Figura 4-33 en la página 85 y la Figura 4-34 en la página 86.

Para ver el conjunto del soporte del motor hidráulico, consulte la Sección 4.5.3 en la página 90.

La PCU suministra aire a la tolva neumática a través de la junta rotativa.

El portaherramientas de un solo punto se monta en la placa de asiento del brazo giratorio en lugar del cabezal de fresado. Consulte la Sección 4.5.2 en la página 89.

La tolva neumática y el adaptador se montan en el extremo del tornillo de bola del brazo giratorio.

El conjunto de junta rotativa se monta en el centro de la mesa rotativa y transmite el fluido al motor hidráulico y el aire a la tolva. Consulte la Sección 4.5.3 en la página 90. La válvula de aire que circula por la tolva también se encuentra aquí.

El procedimiento de parada de emergencia se indica en la Sección 5.2.1 de la página 98.

4.5.1 Configuración de la junta rotativa para montaje del DI o el DE

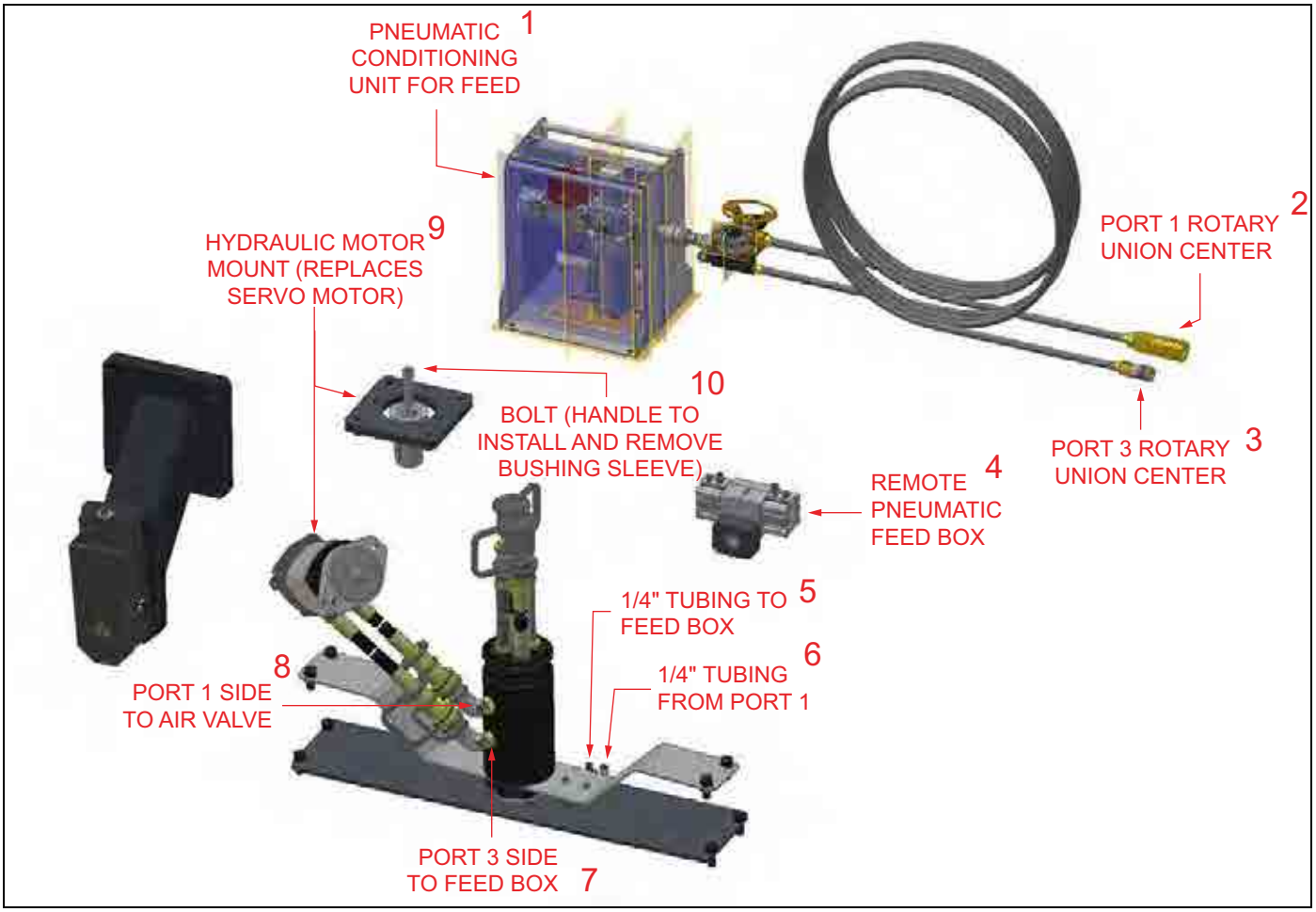

FIGURA 4-32. COMPONENTES PARA LA CONFIGURACIÓN DE LA JUNTA ROTATIVA

TABLA 4-6. IDENTIFICACIÓN DE LOS COMPONENTES PARA LA CONFIGURACIÓN DE LA JUNTA ROTATIVA

Número	Componente
1	Unidad de acondicionamiento neumático para la alimentación
2	Puerto 1 centro de la junta rotativa
3	Puerto 3 centro de la junta rotativa
4	Tolva neumática remota (consulte la Figura 4-33 en la página 85 y la Figura 4-34 en la página 86 para más información)
5	Tubo de 1/4" a la tolva
6	Tubo de 1/4" desde el puerto 1
7	Puerto 3 lateral a la tolva
8	Puerto 1 lateral a la válvula de aire

TABLA 4-6. IDENTIFICACIÓN DE LOS COMPONENTES PARA LA CONFIGURACIÓN DE LA JUNTA ROTATIVA

Número	Componente
9	Montaje del motor hidráulico (sustituye al servomotor)
10	Perno (manija para instalar y retirar el casquillo)

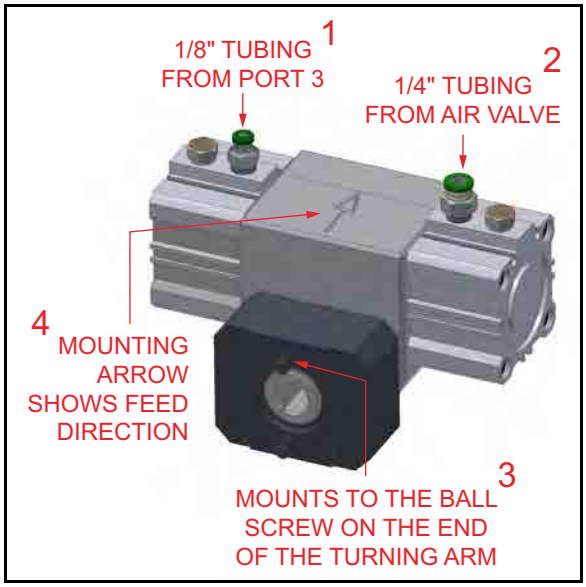

FIGURA 4-33. DETALLE DE LA TOLVA

TABLA 4-7. IDENTIFICACIÓN DEL DETALLE DE LA TOLVA

Número	Componente
1	Tubo de 1/8" desde el puerto 3
2	Tubo de 1/4" desde la válvula de aire
3	Se monta en el husillo de bolas en el extremo del brazo giratorio
4	La flecha de montaje muestra la dirección de alimentación

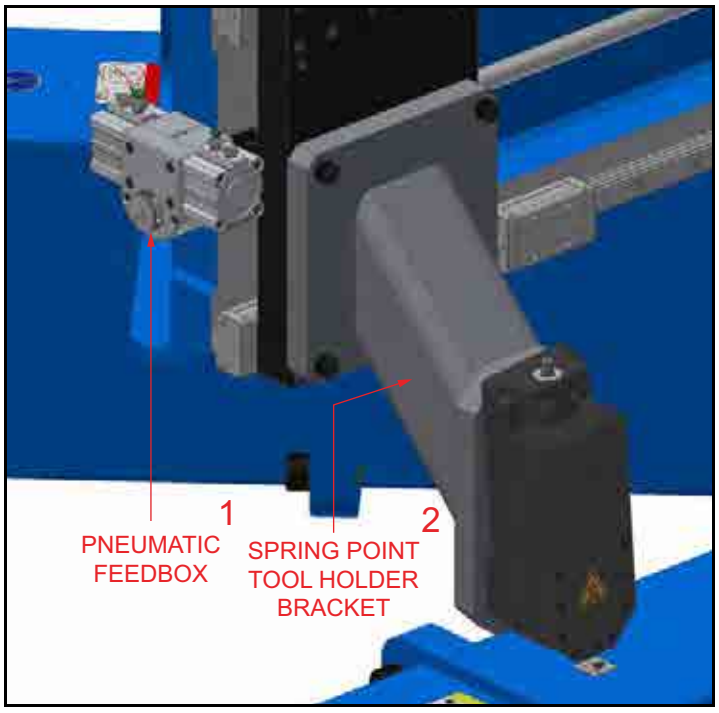

FIGURA 4-34. UBICACIÓN DE LA TOLVA NEUMÁTICA

TABLA 4-8. IDENTIFICACIÓN DE LA TOLVA NEUMÁTICA

Número	Componente
1	Caja de alimentación neumática
2	Soporte del portaherramientas con punta de muelle

4.5.1.1 Configuración del montaje DI

La Figura 4-35 muestra un despiece de la configuración de la junta rotativa para el montaje DI. Consulte la Figura A-31 de la página 150 para identificar las piezas numeradas.

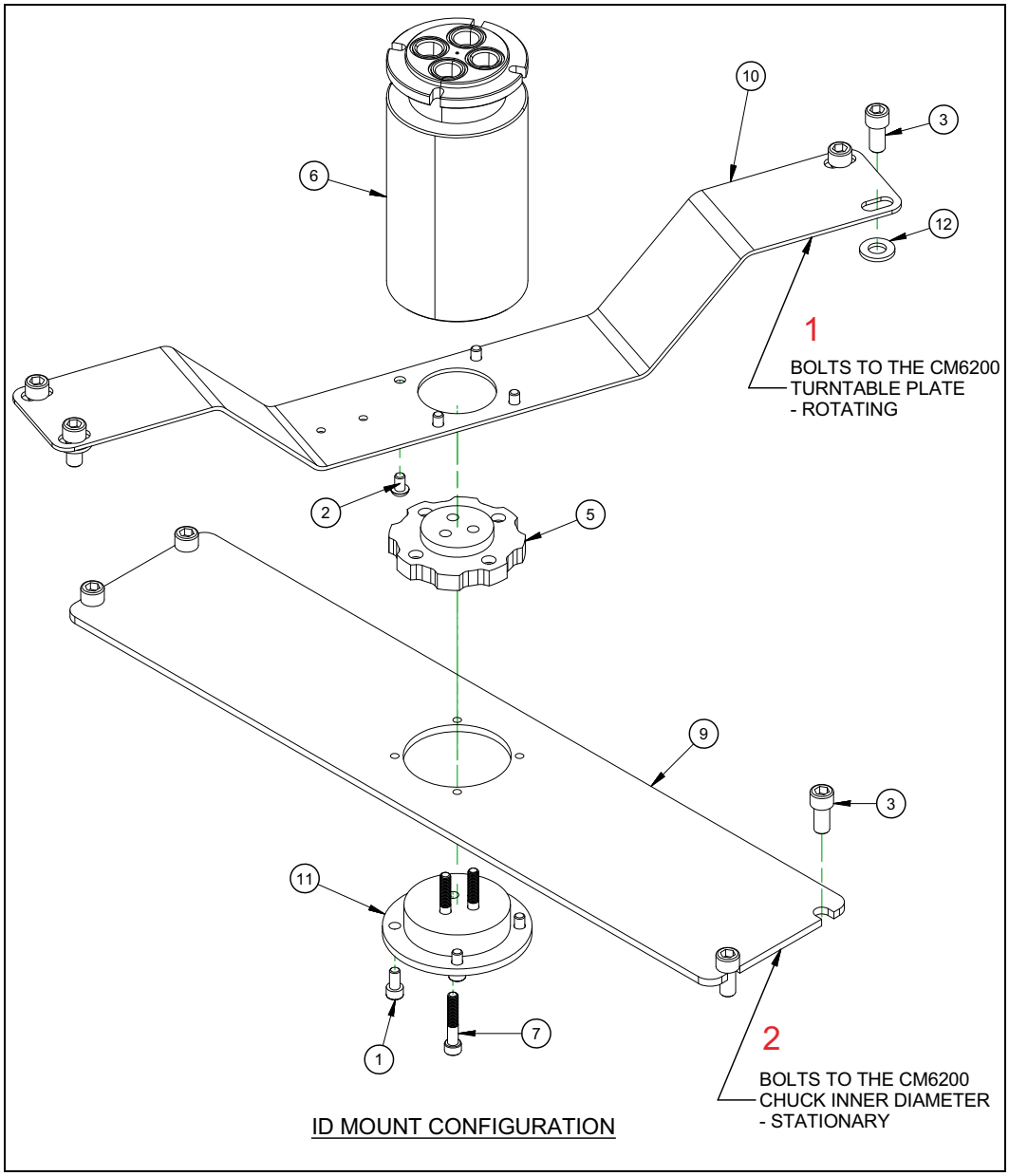

FIGURA 4-35. CONFIGURACIÓN DE MONTAJE DI DE LA JUNTA ROTATIVA

TABLA 4-9. IDENTIFICACIÓN DE LA CONFIGURACIÓN DE MONTAJE DI

Número	Componente
1	Se atornilla a la plataforma giratoria CM6200 (giratorio)
2	Se atornilla al diámetro interior del mandril CM6200 (fijo)

Para configurar la junta rotativa para el montaje DI, consulte la Figura 4-35:

1. Atornille el brazo de retención de par a laCM6200 plataforma giratoria. Girará junto con la máquina.
2. Atornille el soporte de la junta rotativa al CM6200 diámetro interior del mandril. Se quedará fijo.

4.5.1.2 Configuración del montaje del DE

La Figura 4-36 muestra las piezas utilizadas para configurar el montaje del DE de la junta rotativa. Consulte la Figura A-31 de la página 150 para identificar las piezas.

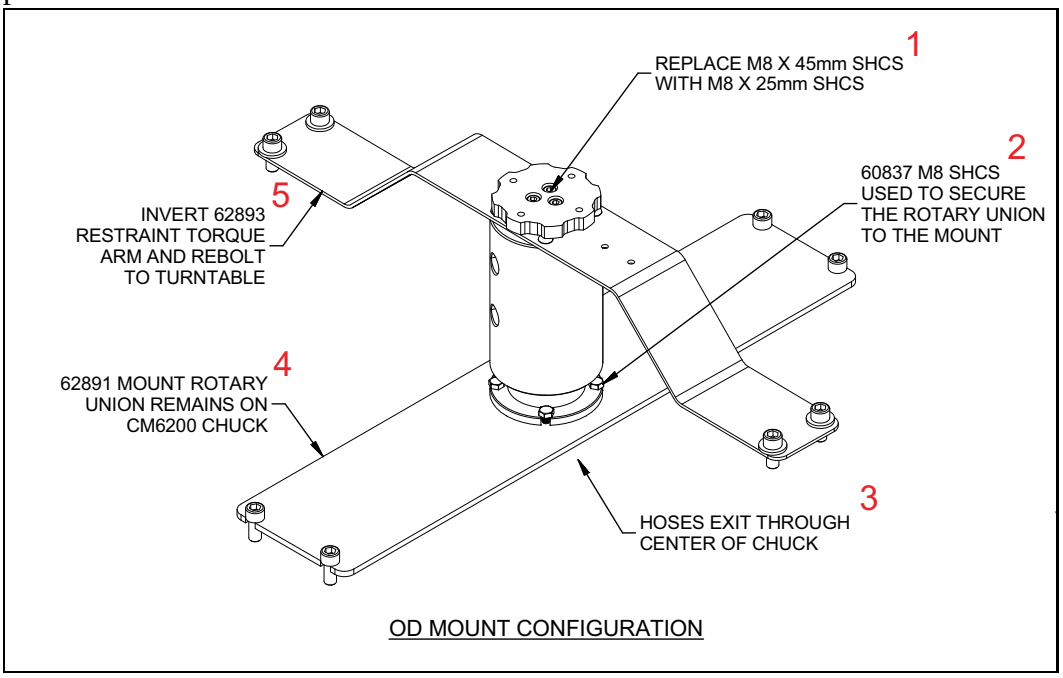

FIGURA 4-36. CONFIGURACIÓN DE MONTAJE DEL DE DE LA JUNTA ROTATIVA

TABLA 4-10. IDENTIFICACIÓN DE LA CONFIGURACIÓN DE MONTAJE DEL DE

Número	Componente
1	Sustituya los M8 x 45 mm SHCS por M8 x 25 mm SHCS
2	El N/P 60837 M8 SHCS se utiliza para fijar la junta rotativa al montaje
3	Las mangueras salen por el centro del mandril
4	El montaje de la junta rotativa del N/P 62891 permanece en el mandril CM6200
8	Invierta el brazo de torsión de retención P/N 62893 y vuelva a atornillarlo a la plataforma giratoria

Para configurar la junta rotativa para el montaje DI, consulte la Figura 4-37:

1. Sustituya los M8 x 45 mm SHCS por M8 x 25 mm SHCS. Mantenga la misma leva en su sitio.
2. Invierta el brazo de torsión de retención y vuelva a atornillarlo a la plataforma giratoria.
3. Asegure la junta rotativa al montaje con los SHCS M8 (N/P 55799). El montaje de la junta rotativa permanece en el CM6200 mandril.

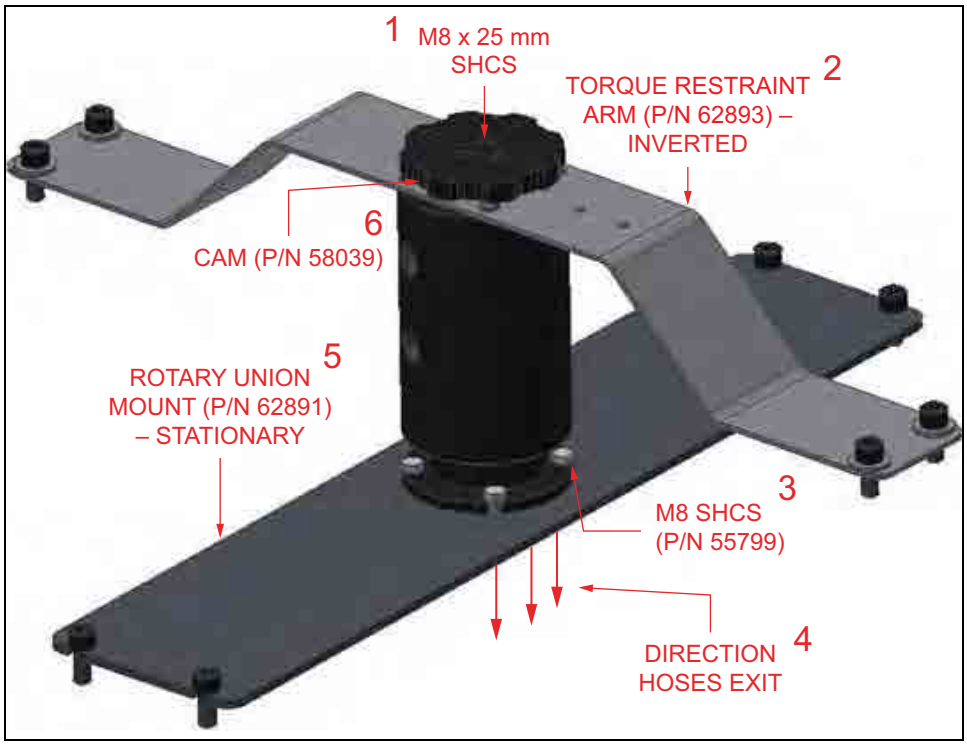

FIGURA 4-37. CONFIGURACIÓN DE MONTAJE DEL DE DE LA JUNTA ROTATIVA

TABLA 4-11. IDENTIFICACIÓN DE LA CONFIGURACIÓN DE MONTAJE DEL DE DE LA JUNTA ROTATIVA

Número	Componente
1	Tornillo de cabeza hueca M8 x 25 mm (SHCS)
2	Brazo de retención de torsión (N/P 62893) – invertido
3	M8 SHCS (N/P 55799)
4	Dirección de salida de las mangueras
5	Montaje de la junta rotativa (N/P 62891) – fijo
6	Leva (N/P 58039)

4.5.2 Sustitución del conjunto de fresado

Proceda de la siguiente manera para sustituir el conjunto de fresado por el conjunto de cabezal de herramienta de un solo punto:

1. Desconecte completamente la corriente y apague la fuente de alimentación.
2. Retire el conjunto del cabezal de fresado, incluida la placa adaptadora del cabezal de fresado, de la placa de deslizamiento transversal (consulte la Figura 4-38, que también se muestra en la Figura A-11 de la página 130).
3. Fije el conjunto de cabezal de la herramienta de un solo punto (N/P 62984) a la placa de deslizamiento transversal.

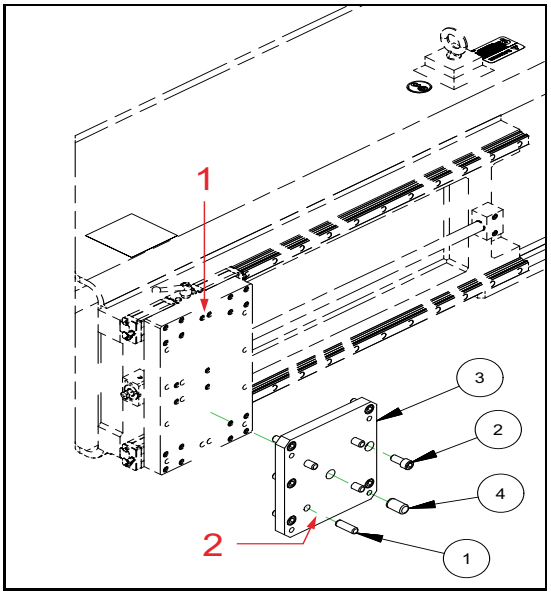

FIGURA 4-38. PLACA DE DESLIZAMIENTO TRANSVERSAL

TABLA 4-12. IDENTIFICACIÓN DE LA PLACA DE DESLIZAMIENTO TRANSVERSAL

Número	Componente
1	Placa de sillín
2	Placa adaptadora del cabezal de fresado

4. Monte el conjunto del cabezal de la herramienta al adaptador (consulte la Figura 4-39, que se muestra en Figura A-27 de la página 146).

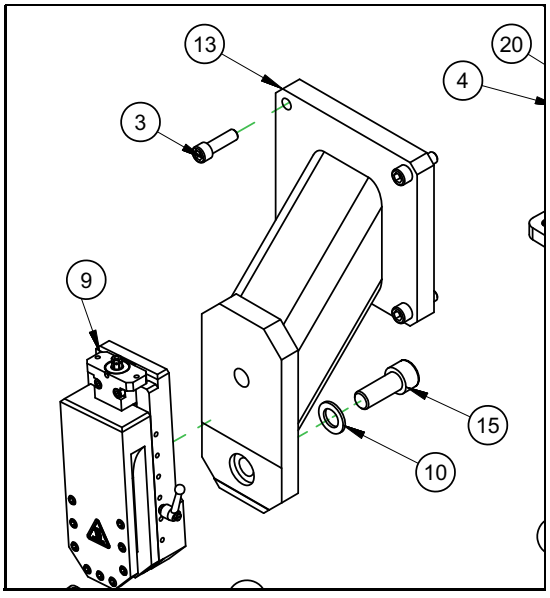

FIGURA 4-39. ADAPTADOR PARA EL CONJUNTO DEL CABEZAL DE LA HERRAMIENTA

4.5.3 Montaje del accionamiento hidráulico en la configuración de punto único

Haga lo siguiente para configurar el accionamiento hidráulico en la configuración de punto único para el rectificado de brida:

1. Desconecte completamente la corriente y apague la fuente de alimentación.
2. Retire el servomotor y la caja de cambios planetarios (consulte la Figura 4-40).
3. Instale el motor hidráulico con un eje de transmisión y una placa adaptadora en el piñón del anillo principal. Cuando seleccione el tamaño del motor, consulte la Tabla 2-1 de la página 13 para ver las velocidades del motor hidráulico.

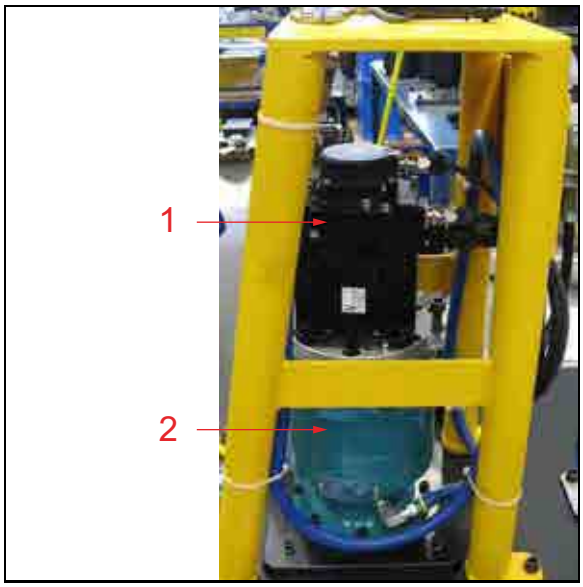

FIGURA 4-40. SERVOMOTOR Y CAJA DE CAMBIOS

TABLA 4-13. IDENTIFICACIÓN DE SERVOMOTOR Y CAJA DE CAMBIOS

Número	Componente
1	Servomotor
2	Caja de cambio

4. Monte una junta rotativa en la máquina (consulte la Figura 4-41).
5. Lleve las mangueras desde la HPU y la PCU hasta la junta rotativa, y desde allí hasta el motor hidráulico y la tolva neumática (consulte las figuras de la Sección 4.5.1 en la página 84).

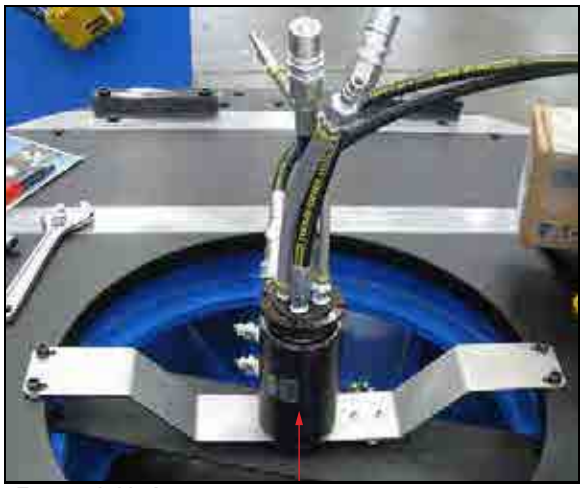
FIGURA 4-41. JUNTA ROTATIVA

NOTICE

El servomotor debe estar conectado a la HPU, pero no a la máquina. Existe el peligro de dañar el servomotor si el motor se desconecta cuando se enciende la HPU.

Consulte la Sección 4.5 en la página 82 para saber cómo instalar la tolva neumática y la placa adaptadora en el extremo del brazo de mecanizado.

4.5.4 Instalación de la tolva

La tolva neumática está equipada con un ajuste remoto de la tolva en la válvula de cierre de aire. Todos los ajustes del avance se realizan a partir de este punto. Las líneas de suministro de aire a la caja de alimentación se suministran en dos tamaños: 0,25" (6,35 mm) y 0,125" (3.175 mm). De este modo se evita el cambio accidental de mangueras.

Para instalar la tolva, haga lo siguiente:

1. Instale el conjunto del adaptador de la tolva (N/P 62994, que se muestra en la Figura 4-42 en el extremo del brazo giratorio atornillándolo con los dos SHCS de M6 x 1 x 30 mm.
2. Tome el conjunto de la tolva neumática (N/P 58671) y móntelo en el adaptador de la tolva atornillándolo con los dos SHCS M6 x 1 x 60 mm.

FIGURA 4-42. ADAPTADOR DE LA TOLVA NEUMÁTICA

Durante el montaje, compruebe que la flecha apunta en la dirección de avance deseada (consulte la Figura 4-43.)

FIGURA 4-43. DIRECCIÓN DE ALIMENTACIÓN DE LA TOLVA

4.5.5 Inversión de la dirección de la tolva

La tolva solo se alimenta en una dirección, sin cambio de configuración.

Haga lo siguiente para invertir la dirección de la tolva:

1. Retire el eje de alimentación y los dos pernos que lo conectan al brazo (Figura 4-44).

FIGURA 4-44. EXTRACCIÓN DE LOS PERNOS PARA INVERTIR LA DIRECCIÓN DE AVANCE

TIP:

Desconectar y alternar las mangueras NO invertirá la dirección de alimentación.

2. Gire la tolva hasta que la flecha apunte en la dirección de alimentación deseada.
3. Vuelva a instalar los pernos y el eje de alimentación.

Esta tolva tiene dos modos, activada y desactivada (neutro), como se muestra en la Figura 4-45.

FIGURA 4-45. FLECHA DE DIRECCIÓN DE AVANCE

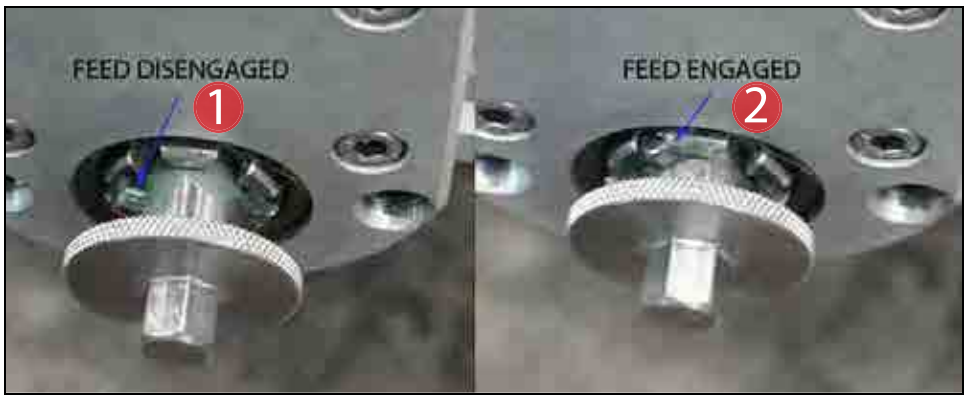

FIGURA 4-46. POSICIONES DE MODO DE LA TOLVA

TABLA 4-14. IDENTIFICACIÓN DEL MODO DE LA TOLVA

Número	Componente
1	Alimentación desactivada
2	Alimentación activada

En punto muerto, la herramienta puede ser alimentada manualmente en cualquier dirección. Las mangueras conectadas a la tolva deben tener una longitud extra de aproximadamente 304,8 mm (12") enrolladas dentro del brazo para permitir que el brazo se mueva y para evitar el peligro de que las mangueras se enganchen.

Para desconectar las mangueras de alimentación, presione hacia abajo el collar alrededor de la manguera y tire de la manguera.

FIGURA 4-47. MÉTODO DE DESCONEXIÓN DE LA MANGUERA DE ALIMENTACIÓN

4.5.6 Funcionamiento del sistema de alimentación neumática

Para operar el sistema de alimentación neumática, haga lo siguiente:

1. Conecte las fuentes de energía.

TABLA 4-15. IDENTIFICACIÓN DE LAS VÁLVULAS DE PCU

Número	Componente
1	Válvula de alimentación conectada/desconectada
2	Válvula de ajuste de la velocidad
3	Ajuste del índice de alimentación

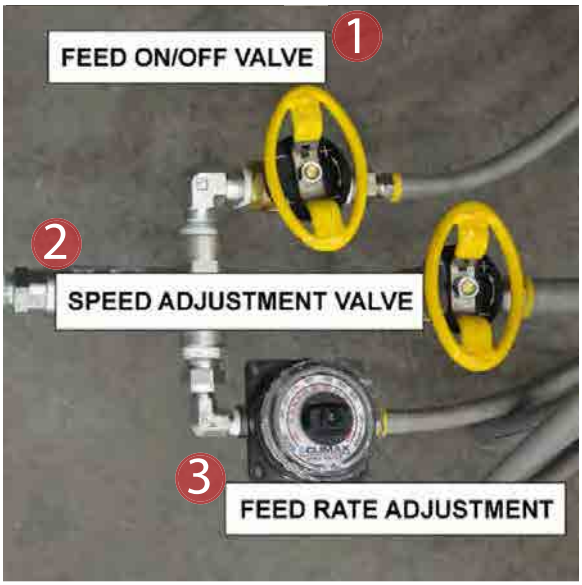

FIGURA 4-48. VÁLVULAS DE PCU

2. Pulse el botón START en la PCU.
3. Para ajustar las rotaciones por minuto (RPM) de la plataforma giratoria, utilice la válvula de ajuste de velocidad para encender el motor de impulsión.
4. Para ajustar el avance por revolución, gire el dial de ajuste del avance al mínimo o al ajuste deseado, si lo conoce.
5. Con la válvula de encendido/apagado del avance, encienda el avance y ajuste la velocidad de avance para el corte deseado.

NOTICE

Gire completamente la válvula de encendido/apagado del avance para activar o desactivar el avance.

6. Utilice la válvula de ajuste de velocidad para ajustar el motor de accionamiento para conseguir el corte deseado.
7. Cuando el corte esté completo, detenga primero el avance y luego la rotación de la máquina.

⚠ WARNING

Para evitar lesiones graves, no introduzca la mano en el interior del basculante del brazo de mecanizado durante el funcionamiento.

4.5.7 Ajuste de las características de corte

Haga lo siguiente para ajustar las características de corte:

1. Cuando termine el corte, detenga el avance y la máquina.
2. La máquina debe estar bloqueada antes de cambiar de herramienta o hacer cualquier ajuste en ella.
3. Ajuste la dirección de la máquina, la profundidad de corte o la posición de la herramienta, según sea necesario.
4. Arranque la máquina y aliméntela de nuevo para iniciar un nuevo corte, según sea necesario.
5. Repita hasta conseguir la superficie deseada.

⚠ WARNING

Para evitar lesiones graves, no introduzca la mano en el interior del basculante del brazo de mecanizado durante el funcionamiento.

4.6 DESMONTAJE

⚠ WARNING

Si no se sujeta correctamente, esta máquina puede caerse y causar lesiones mortales al personal. Preste especial atención a las instalaciones con bridas verticales.

La máquina debe estar correctamente montada y conectada a una grúa u otro aparato de elevación adecuado antes de comenzar cualquier paso de desmontaje. Use un aparejo complementario como medida de precaución.

Haga lo siguiente para desmontar la máquina:

1. Coloque la mesa y el brazo de mecanizado en la posición de elevación adecuada.
2. Desconecte completamente la corriente y apague la unidad de alimentación hidráulica.
3. Retraiga el eje y saque la fresa de este.
4. Desconecte los cables de alimentación y las mangueras hidráulicas.
5. Vuelva a colocar cualquier dedo de ajuste que haya quitado.
6. Coloque la máquina de la misma manera que la instaló (consulte la Sección 3.3 en la página 22).

7. Coloque la torre de mangueras en posición de estiba (consulte la Figura 4-49).
8. Sujete la máquina con un elevador.
9. Afloje los tornillos de elevación. Si se encuentra en posición vertical o inclinada, deje el perno de apilado inferior en posición y afloje los demás tornillos de elevación. Esto evita que la máquina se caiga cuando se aflojan las demás patas de elevación.
10. Usando un elevador, retire la máquina de la pieza de trabajo.

FIGURA 4-49. POSICIÓN DE ESTIBA DE LA TORRE DE MANGUERAS

Si almacena la máquina, consulte Sección 6.

Esta página se ha dejado en blanco a propósito

5 MANTENIMIENTO Y SOLUCIÓN DE PROBLEMAS

EN ESTE CAPÍTULO:

5.1 INTERVALOS DE MANTENIMIENTO -97
5.2 TAREAS DE MANTENIMIENTO -98
5.2.1 COMPROBAR LA PARADA DE EMERGENCIA DE LA UNIDAD DE ACONDICIONAMIENTO NEUMÁTICO - - - -98
5.2.2 COMPROBAR EL CIRCUITO DE SALIDA DE LA UNIDAD DE ACONDICIONAMIENTO NEUMÁTICO - - - - - -98
5.2.3 MANTENER LA MESA GIRATORIA Y EL CONJUNTO DE ACCIONAMIENTO - - - - - - - - - - - - - - - -99
5.2.4 SUSTITUCIÓN DE LA BATERÍA DEL PLC -99
5.2.5 AJUSTES DEL FRENO DE ARRASTRE - 100
5.2.6 AJUSTE DEL FRENO DE ARRASTRE - 101
5.3 LUBRICANTES RECOMENDADOS - 102
5.3.1 LUBRICACIÓN DEL ENGRANAJE DEL ANILLO PRINCIPAL - 105
5.3.2 MANTENIMIENTO DE RIELES LINEALES - 105
5.4 RESOLUCIÓN DE PROBLEMAS - 105
5.4.1 LA MÁQUINA NO ESTÁ GIRANDO - 105
5.4.2 LA MÁQUINA NO SE ESTÁ ALIMENTANDO O ES LENTA Y NO RESPONDE - - - - - - - - - - - - - - - 106
5.4.3 LA MÁQUINA ESTÁ FRESANDO MAL - 106
5.4.4 LA MÁQUINA NO ESTÁ CORTANDO PLANA - 107
5.4.5 EL EJE NO ESTÁ GIRANDO - 107
5.4.6 LA MÁQUINA SE DETIENE REPENTINAMENTE - 107
5.4.7 LA PROFUNDIDAD DE FRESADO CAMBIA INVOLUNTARIAMENTE - - - - - - - - - - - - - - - - - - - 107
5.4.8 ALARMA O ADVERTENCIA DEL SERVOSISTEMA - 107
5.5 CÓDIGOS DE ERROR DEL SERVOAMPLIFICADOR MR-J3 - 108

5.1 INTERVALOS DE MANTENIMIENTO

⚠ CAUTION

La falta de limpieza y mantenimiento adecuados de la máquina puede ocasionar daños en ésta y anular la garantía.
Mantenga siempre las virutas alejadas de las piezas móviles de la máquina.

Es fundamental seguir el programa de mantenimiento que se describe en la Tabla 5-1 en la página 98 para que la máquina tenga una vida útil normal. Mantenga todos los componentes de la máquina en condiciones de trabajo limpias.

Compruebe que tanto las piezas como las superficies de montaje, accesorios hidráulicos y las herramientas no tengan virutas, mellas o rebabas metálicas. Para evitar la corrosión, enjuague bien las partes de la máquina que estén expuestas al agua salada con agua dulce y limpia.

TABLA 5-1. INTERVALOS Y TAREAS DE MANTENIMIENTO

Intervalo	Tarea	Ver sección
Antes de cada uso	Comprobar la parada de emergencia de la unidad de acondicionamiento neumático.	5.2.1
	Comprobar el circuito de salida de la unidad de acondicionamiento neumático.	5.2.2
Antes y después de cada uso	Retire las virutas del rodamiento circular, del montaje del reductor y de la corredera radial.	5.2
Después de cada uso	Limpie la máquina con trapos limpios y secos.	--
	Elimine la suciedad y la humedad de la superficie de la máquina.	--
Cada cinco años	Sustituya la batería del PLC.	

5.2 TAREAS DE MANTENIMIENTO

5.2.1 Comprobar la parada de emergencia de la unidad de acondicionamiento neumático

Antes de cada uso, compruebe la parada de emergencia haciendo lo siguiente:

1. Con la máquina en marcha, pulse el botón de parada de emergencia (se muestra en la Figura 4-11 de la página 61).
2. Compruebe que la máquina se detiene.
3. Reajuste la parada de emergencia tirando del botón hacia arriba.

Si la máquina vuelve a arrancar inmediatamente sin que el operador realice ninguna acción, pulse de nuevo el botón de parada de emergencia. Suspenda el uso de la máquina y póngase en contacto con CLIMAX.

5.2.2 Comprobar el circuito de salida de la unidad de acondicionamiento neumático

El circuito de salida de la unidad de acondicionamiento neumático evita que la máquina vuelva a arrancar de forma inesperada después de que se pierda y se restablezca el suministro de aire a la PCU.

Haga lo siguiente para comprobar el circuito de desconexión de la PCU:

1. Compruebe que la PCU está conectada a un suministro de aire y a la CM6200.
2. Compruebe que el bloqueo del suministro de aire esté abierto (hacia arriba).
3. Pulse el botón de INICIO.

4. Abra lentamente la válvula de ajuste de velocidad de la PCU hasta que se conecte el accionamiento giratorio.
5. Cierre (presione hacia abajo) la válvula de bloqueo.
6. Compruebe que la máquina se detiene.
7. Abra la válvula de bloqueo.

Si la máquina vuelve a arrancar inmediatamente sin que el operador realice ninguna acción, pulse el botón de parada de emergencia. Suspenda el uso de la máquina y póngase en contacto con CLIMAX.

5.2.3 Mantener la mesa giratoria y el conjunto de accionamiento

Antes y después de operar la CM6200, limpie o aspire las virutas del cojinete circular, el montaje del reductor y la corredera radial. CLIMAX no recomienda el uso de aire comprimido alrededor del rodamiento lineal o de las juntas.

Los cojinetes principales y el reductor de engranajes están lubricados de por vida bajo condiciones normales de uso.

5.2.4 Sustitución de la batería del PLC

NOTICE

El controlador lógico programable (PLC) del sistema de control CM6200 utiliza una batería para mantener el programa cuando se desconecta la red eléctrica. Esta batería debe sustituirse periódicamente ya que, de lo contrario, el programa del PLC se perderá y la máquina no funcionará hasta que se restablezca dicho programa. Para evitar el apagado inesperado de los controles de la CM6200, es importante sustituir la batería de forma periódica.

La vida útil de la batería es de aproximadamente cinco años, pero varía en función de la temperatura a la que se utilice y almacene la máquina (consulte la Figura 5-1).

Battery life & replacement guidelines

FX3U-32BL battery life : Approx. 5 years (ambient temperature : 25°C(77°F))
The life of the battery changes with respect to ambient temperature.
When planning for battery replacement, please estimate the battery life according to the graph to the right and order replacement batteries in advance.

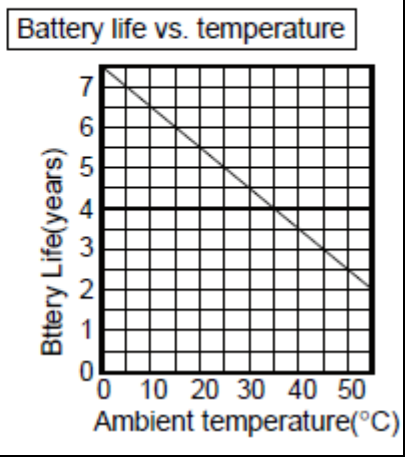

FIGURA 5-1. ESPECIFICACIÓN DE LA BATERÍA DEL PLC

5.2.5 Ajustes del freno de arrastre

El freno de arrastre de la CM6200 debe comprobarse periódicamente para comprobar que el ajuste es correcto. Este ajuste solo debería ser necesario después del mantenimiento, o si la máquina se mueve con un movimiento brusco.

El freno de arrastre está diseñado para eliminar el juego inverso del engranaje, principalmente para aplicaciones verticales o herramientas especiales.

FIGURA 5-2. VISTA SUPERIOR DEL FRENO DE ARRASTRE

La Figura 5-2 y la Figura 5-3 muestran la ubicación del freno de arrastre en la parte superior de la mesa giratoria.

El sistema aplicará resistencia al engranaje para reducir el retroceso y mantener una velocidad constante en aplicaciones verticales o especiales.

FIGURA 5-3. VISTA LATERAL DEL FRENO DE ARRASTRE

5.2.6 Ajuste del freno de arrastre

Para aplicaciones verticales, haga lo siguiente para ajustar el freno de arrastre:

1. Desconecte completamente la corriente y pare la máquina.
2. Para ajustar el freno de arrastre, coloque la máquina de manera que la mesa giratoria esté en posición horizontal y nivelada.
3. Retire el motor.

⚠ CAUTION

No retire el motor a menos que la máquina esté en posición horizontal y todas las partes giratorias hayan sido bloqueadas, liberando el motor para permitir que el cubo gire libremente.

4. Suelte completamente el freno de arrastre haciendo retroceder las tuercas.

⚠ DANGER

No retire los pernos si la máquina no está en posición horizontal, ya que puede producirse un movimiento inesperado de la plataforma giratoria de la CM6200 que puede causar lesiones graves o la muerte.

5. Desbloquee cuidadosa y lentamente cualquier bloque de la máquina.
6. Compruebe la tensión del hub sin el freno de arrastre usando una llave dinamométrica en la ranura del engranaje, debe indicar unas 4 libras por pulgada (0,452 Nm) sin el freno de arrastre acoplado.
7. Para apretar el freno de arrastre, apriete las tuercas lentamente y siga probando el par hasta que haya un par adicional de 0,452-0,565 Nm (4-5 pulg-lb) cuando el cubo es girado manualmente.
8. Instale el motor para su aplicación de mecanizado.

⚠ CAUTION

Mantenga los espacios entre la máquina y las rodajas exentos de virutas y escombros para que la máquina pueda moverse libremente.

Aplicaciones horizontales de mecanizado o fresado en un punto único

El freno de arrastre debe estar desconectado cuando se opera en punto único. Sin embargo, hay momentos en los que el freno de arrastre debe estar activado, por ejemplo, cuando se fresa en cualquier posición.

1. Bloquee completamente y desconecte la máquina.
2. Coloque la máquina de manera que la superficie de la placa superior quede en posición horizontal y nivelada.
3. Retire el motor.

⚠ CAUTION

No retire el motor a menos que la máquina esté en posición horizontal y todas las partes giratorias hayan sido bloqueadas. Liberar el motor permitirá que el cubo gire libremente.

4. Suelte completamente el freno de arrastre haciendo retroceder las tuercas.

⚠ DANGER

No retire los pernos si la máquina no está en posición horizontal, ya que puede producirse un movimiento inesperado de la plataforma giratoria de la CM6200 que puede causar lesiones graves o la muerte.

5. Desbloquee cuidadosa y lentamente cualquier bloque de la máquina.
6. Compruebe la tensión del hub sin el freno de arrastre usando una llave dinamométrica en la ranura del engranaje, debe indicar unas 4 libras por pulgada (0,452 Nm) sin el freno de arrastre acoplado.
7. Girar la máquina manualmente en la posición horizontal debe mostrar alrededor de 4 libras-pulgadas de torque sin que el freno de arrastre esté activado. Esto se mide en el engranaje del motor utilizando una llave dinamométrica en la ranura del engranaje.
8. Apriete las tuercas de bloqueo en la parte superior del freno de arrastre para bloquear el freno de arrastre en posición y para evitar que las tuercas de bloqueo vibren sueltas.
9. Instale el motor para su aplicación de mecanizado.

5.3 LUBRICANTES RECOMENDADOS

CLIMAX recomienda el uso de los siguientes lubricantes para el mantenimiento de los puntos indicados. Si no se utilizan los lubricantes adecuados, pueden producirse daños y un desgaste prematuro de la máquina.

⚠ CAUTION

Evite daños y el desgaste prematuro de la máquina y asegure su garantía utilizando únicamente lubricantes homologados.

TABLA 5-2. LUBRICANTES HOMOLOGADOS

Zona de aplicación	Lubricante	Lubricante biodegradable	Viscosidad (cSt)	Cantidad	Frecuencia
Frecuentemente					
Herramienta de corte	AW 32	CONOCO Eco-terra 32	32 @ 40C 544 @ 100C	Según sea necesario	Uso continuado durante el corte

TABLA 5-2. LUBRICANTES HOMOLOGADOS

Zona de aplicación	Lubricante	Lubricante biodegradable	Viscosidad (cSt)	Cantidad	Frecuencia
Diario					
Caja de cambios del cabezal de fresado	Mobilith SHC 460	N/D	414 @ 40C 47 @ 100C	5 cc	Cada 8 horas de uso
Caminos de cola de milano[a]	AW 32	CONOCO Eco-terra 32	32 @ 40C 544 @ 100C	Según sea necesario	Diariamente durante el uso de la máquina
Superficies sin pintar	LPS1 o LPS2	N/D	38 @ 25C	Según sea necesario	Diariamente durante el uso de la máquina y antes de almacenarla
Cada uso					
Unidades de alimentación hidráulica	CASTROL Hyspin AWS-46 (verano)	CASTROL BioBar 46 (verano); 32 (invierno)	46 @ 40C 682 @ 100C	Según sea necesario para llenar el depósito hasta el nivel del cristal a media vista	Rellenar cada uso Reemplazar el aceite cada 2 años[b]
	AWS-32 (invierno)		32 @ 40C 544 @ 100C		
Husillos de bolas Eisenberger	CONOCO Poly-Tac EP [c]	CASTROL BioTac EP 2	129 @ 40C 116 @ 100C	1 cc por tuerca	Una vez por uso o semanalmente para uso continuado
	Microlube GBU-Y 131	N/D	130 @ 40C 15 @ 100C		
Riel lineal	Riel THK – THK AFA Grease2	N/D	32 @ 40C	2 cc por bloque de cojinetes	Una vez por uso o semanalmente para uso continuado
	CONOCO Poly-Tac EP 2	CASTROL BioTac EP 2	129 @ 40C 116 @ 100C		
Semanalmente					
APU	AW 32	N/D	22-68 @ 40°C 4,3-8,7 @ 100°C	Rellenar lubricante de aceite	Cada uso
Tornillo de cabeza cilíndrica en cabeza de herramienta de un solo punto	-NOOK E-100 lubricante en spray -NOOK PAG-1 grasa	CASTROL BioTac EP 2	96 @ 40C 113 @ 100C	Recubrimiento ligero aplicado a mano o por aspersión	Semanalmente durante el uso de la máquina

TABLA 5-2. LUBRICANTES HOMOLOGADOS

Zona de aplicación	Lubricante	Lubricante biodegradable	Viscosidad (cSt)	Cantidad	Frecuencia
Tornillo de elevación de mandril	Grado Moly antiadherente	N/D	N/D	1 cc por tornillo	Semanalmente durante el uso de la máquina y antes de almacenarla
Anualmente					
Mesa giratoria y conjunto de accionamiento[d]	CONOCO Poly-Tac EP 2	CASTROL BioTac EP 2	129 @ 40C 116 @ 100C	20 cc	Una vez al año
Junta de estanqueidad DI en la mesa giratoria	Pasta de silicona 3M 051135-08946	N/D	N/D	3 cc	Una vez al año
Reductor de engranajes de la mesa principal	Aceite para engranajes Mobil 629	N/D	150 @ 40C 158 @ 100C	N/D	Lubricado de por vida bajo condiciones normales de uso
Motores eléctricos	Consulte la documentación del proveedor	N/D	N/D	Consulte la documentación del proveedor	Consulte la documentación del proveedor

a. Utilice aceite mineral o sintético altamente anticorrosivo y refinado que forme una película de aceite fuerte y que no sea fácilmente emulsionable o lavable por el refrigerante. Los aceites hidráulicos normalmente no son adecuados para la lubricación por deslizamiento.

b. Reemplace siempre los filtros hidráulicos cuando cambie el aceite hidráulico. Nunca asuma que el aceite en los tambores está limpio. Bombee siempre el aceite a través de un filtro hidráulico de 5 micrones antes/mientras llena el depósito.

c. El uso de otros lubricantes en los productos THK anulará la garantía del fabricante.

d. Mientras que se puede usar grasa a base de litio, una grasa a base de calcio permite una mayor lubricidad mientras se consumen mayores cantidades de agua (común en las máquinas herramientas portátiles).

TIP:

Si no se puede utilizar un lubricante aprobado, póngase en contacto con CLIMAX para obtener una alternativa equivalente.

⚠ CAUTION

El lubricante utilizado en la junta de estanqueidad DI debe ser Pasta de Silicona 3M N/P 051135-08946 o equivalente. No se deben utilizar otros lubricantes en esta junta.

5.3.1 Lubricación del engranaje del anillo principal

TIP:

El engranaje del anillo principal debe lubricarse anualmente. El engranaje del anillo debe lubricarse mientras la mesa gira lentamente.

DANGER

No retire el motor si la máquina no está en posición horizontal, ya que puede producirse un movimiento inesperado de la plataforma giratoria de la CM6200 que puede causar lesiones graves o la muerte.

Haga lo siguiente para lubricar el engranaje del anillo principal, de acuerdo con la Figura A-1 de la página 120:

1. Retire la protección del codificador.
2. Retire el servo motorreductor y el conjunto de piñón de accionamiento como una sola unidad.
3. Lentamente permita que la mesa gire y lubrique el engranaje con una fina capa a su paso.
4. Cuando termine la lubricación, reemplace cuidadosamente el conjunto del piñón de accionamiento y la protección del codificador.

5.3.2 Mantenimiento de rieles lineales

Durante la operación, lubrique con frecuencia los rieles y las guías lineales.

Los rieles, las rutas y las piezas de unión se alinean de forma minuciosa en la fábrica. Si es necesaria una nueva alineación, póngase en contacto con CLIMAX para concertar este servicio.

Antes y después de usar la máquina, limpie los rieles y las vías con aceite ligero.

NOTICE

No permita que caiga nada sobre los rieles y no almacene objetos sobre ellos.

5.4 RESOLUCIÓN DE PROBLEMAS

Esta sección está concebida para ayudarle a resolver problemas básicos de rendimiento de la máquina. Para un mantenimiento profundo o si tiene dudas sobre los siguientes procedimientos, póngase en contacto con CLIMAX.

5.4.1 La máquina no está girando

Si la máquina no está girando, compruebe lo siguiente:

- La alimentación de la HPU está activada (Sección 3.11 de la página 50).
- Existe una buena conexión entre la HPU y el servo (Sección 3.11 de la página 50). Intente lo siguiente:
  a) Apague la HPU.
  b) Limpie cualquier residuo en las conexiones.
  c) Asegúrese de que las conexiones estén bloqueadas.
  d) Compruebe que las sujeciones no estén dañadas o desconectadas.
- No hay virutas incrustadas en los cables, y los cables no están dañados (Sección 1.4 en la página 3).
- Los mensajes de error aparecen en el mando colgante (Sección 4.2.2 de la página 60).
- En el modo de punto único, compruebe que el freno de arrastre está desconectado (Sección 5.2.6 en la página 101).

5.4.2 La máquina no se está alimentando o es lenta y no responde

Si la máquina no se alimenta correctamente, compruebe lo siguiente:

- Las conexiones neumáticas de la fuente a la alimentación no tienen líneas rotas o desconectadas (Figura 4-47 de la página 94).
- La tolva está acoplada (Sección 4.2 de la página 59).
- Se han limpiado todos los filtros sucios (Sección 5.3 en la página 102).
- El freno Z está desconectado (Sección 4.1.3 de la página 55).

5.4.3 La máquina está fresando mal

Si la máquina está fresando mal, compruebe lo siguiente:

- Para la aplicación se utiliza la fresadora frontal correcto (el tamaño adecuado para el trabajo).
- La fresadora frontal está apretada en el husillo (Sección 4.3.2 de la página 76).
- Ningún inserto frontal está roto, opaco o suelto. Apriete, reemplace o gire si es necesario.
- El freno está accionado (Sección 5.2.6 en la página 101).
- No hay componentes desgastados o dañados en el eje. Si se encuentra alguno, póngase en contacto con CLIMAX para obtener más información.
- El avance y las revoluciones del eje son los correctos para la aplicación. La velocidad correcta variará según la aplicación.
- Las abrazaderas están apretadas en el brazo de la herramienta (Sección 3.6.1 de la página 35).
- Durante el fresado, el freno de arrastre está bien accionado (Sección 5.2.6 en la página 101).
- El mandril del DI tiene la misma presión de sujeción (Sección 3.5.3 de la página 33).

5.4.4 La máquina no está cortando plana

Si la máquina no fresa en liso, compruebe lo siguiente:

- La máquina está bien sujeta a la pieza de trabajo (Sección 3.7 de la página 39).
- Las patas del mandril no están apretadas en exceso, lo que podría deformar la pieza de trabajo (Sección 3.5.3 de la página 33).
- El eje está encarrilado (Sección 4.1.3 de la página 55).

5.4.5 El eje no está girando

Si el eje no está girando, compruebe lo siguiente:

- La alimentación de la HPU está activada (Sección 3.11 de la página 50).
- Las mangueras hidráulicas están conectadas (Sección 3.11 de página 50).
- No aparecen mensajes de error en el mando colgante (Sección 4.2.2 de la página 60).
- El nivel de fluido es suficiente en la HPU. Rellene si es necesario.
- El eje está exento de elementos.

5.4.6 La máquina se detiene repentinamente

Si la máquina se detiene de repente, compruebe lo siguiente:

- La alimentación de la HPU está activada (Sección 3.11 de la página 50).
- No aparecen mensajes de error en el mando colgante (Sección 4.2.2 de la página 60).
- La sujeción no está dañada ni desconectada.

5.4.7 La profundidad de fresado cambia involuntariamente

Si la profundidad de fresado cambia sin su dirección, compruebe lo siguiente:

- El freno está accionado (Sección 5.4 en la página 105).
- Hay suficiente rozamiento en el eje de rosca en la dirección Z. Si está demasiado flojo, apriete los tornillos de ajuste a ambos lados del soporte de rodamientos para aumentar la tensión en los bujes tensores.

5.4.8 Alarma o advertencia del servosistema

Para cualquier problema con la caja de conexiones del servomotor, consulte el Anexo D de la página 179.

Para el antiguo servomotor (MR-J3), consulte la Sección 5.5 en la página 108.

5.5 CÓDIGOS DE ERROR DEL SERVOAMPLIFICADOR MR-J3

POINT
• As soon as an alarm occurs, make the Servo off status and interrupt the main circuit power.

If an alarm/warning has occurred, refer to this chapter and remove its cause.

8.1 Alarms and warning list

When a fault occurs during operation, the corresponding alarm or warning is displayed. If any alarm or warning has occurred, refer to section 8.2 or 8.3 and take the appropriate action. When an alarm occurs, the ALM turns OFF.

After its cause has been removed, the alarm can be deactivated in any of the methods marked ○ in the alarm deactivation column. The alarm is automatically canceled after removing the cause of occurrence.

	Display	Name	Alarm deactivation		
			Power OFF→ON	Error reset	CPU reset
Alarms	10	Undervoltage	○	○	○
	12	Memory error 1 (RAM)	○		
	13	Clock error	○		
	15	Memory error 2 (EEP-ROM)	○		
	16	Encoder error 1 (At power on)	○		
	17	Board error	○		
	19	Memory error 3 (Flash-ROM)	○		
	1A	Motor combination error	○		
	20	Encoder error 2	○		
	24	Main circuit error	○	○	○
	25	Absolute position erase	○		
	30	Regenerative error	(Note 1) ○	(Note 1) ○	(Note 1) ○
	31	Overspeed	○	○	○
	32	Overcurrent	○		
	33	Overvoltage	○	○	○
	34	Receive error 1	○	(Note 2) ○	○
	35	Command frequency error	○	○	○
	36	Receive error 2	○	○	○
	37	Parameter error	○		
	45	Main circuit device overheat	(Note 1) ○	(Note 1) ○	(Note 1) ○
	46	Servo motor overheat	(Note 1) ○	(Note 1) ○	(Note 1) ○
	47	Cooling fan error	○		
	50	Overload 1	(Note 1) ○	(Note 1) ○	(Note 1) ○
	51	Overload 2	(Note 1) ○	(Note 1) ○	(Note 1) ○
	52	Error excessive	○	○	○
	8A	USB communication time-out error	○	○	○
	8E	USB communication error	○	○	○
	888	Watchdog	○		

	Display	Name
Warnings	92	Battery cable disconnection warning
	96	Home position setting warning
	9F	Battery warning
	E0	Excessive regeneration warning
	E1	Overload warning 1
	E3	Absolute position counter warning
	E4	Parameter warning
	E6	Servo forced stop warning
	E7	Controller forced stop warning
	E8	Cooling fan speed reduction warning
	E9	Main circuit off warning
	EC	Overload warning 2
	ED	Output watt excess warning

Note 1. Deactivate the alarm about 30 minutes of cooling time after removing the cause of occurrence.
2. In some controller communication status, the alarm factor may not be removed.

8.2 Remedies for alarms

⚠ CAUTION

- When any alarm has occurred, eliminate its cause, ensure safety, then reset the alarm, and restart operation. Otherwise, injury may occur.
- If an absolute position erase (25) occurred, always make home position setting again. Not doing so may cause unexpected operation.
- As soon as an alarm occurs, mark Servo-off and power off the main circuit and control circuit.

POINT

- When any of the following alarms has occurred, do not deactivate the alarm and resume operation repeatedly. To do so will cause the servo amplifier/servo motor to fail. Remove the cause of occurrence, and leave a cooling time of more than 30 minutes before resuming operation. To protect the main circuit elements, any of these servo alarms cannot be deactivated from the servo system controller until the specified time elapses after its occurrence. Judging the load changing condition until the alarm occurs, the servo amplifier calculates this specified time automatically.
- Regenerative error (30)
- Overload 1 (50)
- Overload 2 (51)
- The alarm can be deactivated by switching power off, then on or by the error reset command • CPU reset from the servo system controller. For details, refer to section 8.1.

When an alarm occurs, the trouble (ALM) switches off and the dynamic brake is operated to stop the servo motor. At this time, the display indicates the alarm No.
The servo motor comes to a stop. Remove the cause of the alarm in accordance with this section. Use the MR Configurator to refer to a factor of alarm occurrence.

Display	Name	Definition	Cause	Action
10	Undervoltage	Power supply voltage dropped. MR-J3-□B: 160VAC or less MR-J3-□B1: 83VAC or less MR-J3-□B4: 280VAC or less	1. Power supply voltage is low.	Check the power supply.
			2. There was an instantaneous control power failure of 60ms or longer.	
			3. Shortage of power supply capacity caused the power supply voltage to drop at start, etc.	
			4. The bus voltage dropped to the following value or less. MR-J3-□B: 200VDC MR-J3-□B1: 158VDC MR-J3-□B4: 380VDC	
			5. Faulty parts in the servo amplifier Checking method Alarm (10) occurs if power is switched on after disconnection of all cables but the control circuit power supply cables.	Change the servo amplifier.

Display	Name	Definition	Cause	Action
12	Memory error 1 (RAM)	RAM, memory fault	Faulty parts in the servo amplifier Checking method Alarm (any of 12 and 13) occurs if power is switched on after disconnection of all cables but the control circuit power supply cables.	Change the servo amplifier.
13	Clock error	Printed board fault		
		Clock error transmitted from the controller	Faulty controller Checking method Alarm (13) occurs, if servo controller is used in multiple CPU system.	Change the servo system controller.
15	Memory error 2 (EEP-ROM)	EEP-ROM fault	1. Faulty parts in the servo amplifier Checking method Alarm (15) occurs if power is switched on after disconnection of all cables but the control circuit power supply cables.	Change the servo amplifier.
			2. The number of write times to EEP-ROM exceeded 100,000.	
16	Encoder error 1 (At power on)	Communication error occurred between encoder and servo amplifier.	1. Encoder connector (CN2) disconnected.	Connect correctly.
			2. Encoder fault	Change the servo motor.
			3. Encoder cable faulty (Wire breakage or shorted)	Repair or change the cable.
			4. Encoder cable type (2-wire, 4-wire) selection was wrong in parameter setting.	Correct the setting in the fourth digit of parameter No.PC04.
17	Board error 2	CPU/parts fault	Faulty parts in the servo amplifier Checking method Alarm (17 or 19) occurs if power is switched on after disconnection of all cables but the control circuit power supply cable.	Change the servo amplifier.
19	Memory error 3 (Flash ROM)	ROM memory fault		
1A	Motor combination error	Wrong combination of servo amplifier and servo motor.	Wrong combination of servo amplifier and servo motor connected.	Use correct combination.
20	Encoder error 2	Communication error occurred between encoder and servo amplifier.	1. Encoder connector (CN2) disconnected.	Connect correctly.
			2. Encoder cable faulty (Wire breakage or shorted)	Repair or change the cable.
			3. Encoder fault	Change the servo motor.
24	Main circuit error	Ground fault occurred at the servo motor power (U,V and W phases) of the servo amplifier.	1. Power input wires and servo motor power wires are in contact.	Connect correctly.
			2. Sheathes of servo motor power cables deteriorated, resulting in ground fault.	Change the cable.
			3. Main circuit of servo amplifier failed. Checking method Alarm (24) occurs if the servo is switched on after disconnecting the U, V, W power cables from the servo amplifier.	Change the servo amplifier.
25	Absolute position erase	Absolute position data in error	1. Voltage drop in encoder (Battery disconnected.)	After leaving the alarm occurring for a few minutes, switch power off, then on again. Always make home position setting again.
			2. Battery voltage low	Change the battery. Always make home position setting again.
			3. Battery cable or battery is faulty.	
		Power was switched on for the first time in the absolute position detection system.	4. Home position not set.	After leaving the alarm occurring for a few minutes, switch power off, then on again. Always make home position setting again.

Display	Name	Definition	Cause	Action
30	Regenerative error	Permissible regenerative power of the built-in regenerative resistor or regenerative option is exceeded.	1. Wrong setting of parameter No. PA02	Set correctly.
			2. Built-in regenerative resistor or regenerative option is not connected.	Connect correctly.
			3. High-duty operation or continuous regenerative operation caused the permissible regenerative power of the regenerative option to be exceeded. Checking method Call the status display and check the regenerative load ratio.	1. Reduce the frequency of positioning. 2. Use the regenerative option of larger capacity. 3. Reduce the load.
			4. Power supply voltage is abnormal. MR-J3-□B:260VAC or more MR-J3-□B1:More than 135VAC MR-J3-□B4: 535VAC or more	Check the power supply.
			5. Built-in regenerative resistor or regenerative option faulty.	Change the servo amplifier or regenerative option.
		Regenerative transistor fault	6. Regenerative transistor faulty. Checking method 1) The regenerative option has overheated abnormally. 2) The alarm occurs even after removal of the built-in regenerative resistor or regenerative option.	Change the servo amplifier.
31	Overspeed	Speed has exceeded the instantaneous permissible speed.	1. Small acceleration/deceleration time constant caused overshoot to be large.	Increase acceleration/deceleration time constant.
			2. Servo system is instable to cause overshoot.	1. Re-set servo gain to proper value. 2. If servo gain cannot be set to proper value. 1) Reduce load inertia moment ratio; or 2) Reexamine acceleration/deceleration time constant.
			3. Encoder faulty.	Change the servo motor.
32	Overcurrent	Current that flew is higher than the permissible current of the servo amplifier. (If the alarm (32) occurs again when turning ON the servo after resetting the alarm by turning OFF/ON the power when the alarm (32) first occurred, the transistor (IPM • IGBT) of the servo amplifier may be at fault. In the case, do not repeat to turn OFF/ON the power. Check the transistor with the checking method of "Cause 2".)	1. Short occurred in servo motor power (U, V, W).	Correct the wiring.
			2. Transistor (IPM • IGBT) of the servo amplifier faulty. Checking method Alarm (32) occurs if power is switched on after U,V and W are disconnected.	Change the servo amplifier.
			3. Ground fault occurred in servo motor power (U, V, W).	Correct the wiring.
			4. External noise caused the overcurrent detection circuit to misoperate.	Take noise suppression measures.

Display	Name	Definition	Cause	Action
33	Overvoltage	The following shows the input value of converter bus voltage. MR-J3-□B(1): 400VDC or more MR-J3-□B4: 800VDC or more	1. Regenerative option is not used.	Use the regenerative option.
			2. Though the regenerative option is used, the parameter No.PA02 setting is "□□00 (not used)".	Set correctly.
			3. Lead of built-in regenerative resistor or regenerative option is open or disconnected.	1. Change the lead. 2. Connect correctly.
			4. Regenerative transistor faulty.	Change the servo amplifier.
			5. Wire breakage of built-in regenerative resistor or regenerative option	1. For wire breakage of built-in regenerative resistor, change the servo amplifier. 2. For wire breakage of regenerative option, change the regenerative option.
			6. Capacity of built-in regenerative resistor or regenerative option is insufficient.	Add regenerative option or increase capacity.
			7. Power supply voltage high.	Check the power supply.
			8. Ground fault occurred in servo motor power (U, V, W).	Correct the wiring.
			9. The jumper across BUE-SD of the FR-BU2 brake unit is removed.	Fit the jumper across BUE-SD.
34	Receive error 1	SSCNETⅢ communication error (Continuously communication error with about 3.5ms interval.)	1. The SSCNETⅢ cable is disconnected.	Connect it after turning off the control circuit power supply for servo amplifier.
			2. The surface at the end of SSCNETⅢ cable got dirty.	Wipe dirt at the surface away. (Refer to section 3.9)
			3. The SSCNETⅢ cable is broken or severed.	Change the cable.
			4. Noise entered the servo amplifier.	Take noise suppression measures.
			5. Optical characteristic of SSCNETⅢ cable deteriorated because vinyl tape and/or wire sheath, which contains migrating plasticizer, adhered to the cable.	Remove the vinyl tape and/or wire sheath, which contains migrating plasticizer, and exchange the cable.
35	Command frequency error	Input pulse frequency of command pulse is too high.	1. Command given is greater than the maximum speed of the servo motor.	Check operation program.
			2. Servo system controller failure.	Change the servo system controller.
			3. Noise entered the servo amplifier.	Take noise of I/O signal suppression measures.
			4. Noise entered the controller.	Take noise from the controller suppression measures.
36	Receive error 2	SSCNETⅢ communication error (Intermittently communication error with about 70ms interval.)	1. The SSCNETⅢ cable is disconnected.	Connect it after turning off the control circuit power supply for servo amplifier.
			2. The surface at the end of SSCNETⅢ cable got dirty.	Wipe dirt away from the surface. (Refer to section 3.9)
			3. The SSCNETⅢ cable is broken or severed.	Change the cable.
			4. Noise entered the servo amplifier.	Take noise suppression measures.
			5. Optical characteristic of SSCNETⅢ cable deteriorated because vinyl tape and/or wire sheath, which contains migrating plasticizer, adhered to the cable.	Remove the vinyl tape and/or wire sheath, which contains migrating plasticizer, and exchange the cable.

Display	Name	Definition	Cause	Action
37	Parameter error	Parameter setting is wrong.	1. Servo amplifier fault caused the parameter setting to be rewritten.	Change the servo amplifier.
			2. There is a parameter whose value was set to outside the setting range by the controller.	Change the parameter value to within the setting range.
			3. The number of write times to EEP-ROM exceeded 100,000 due to parameter write, etc.	Change the servo amplifier.
45	Main circuit device overheat	Main circuit device overheat	1. Servo amplifier faulty.	Change the servo amplifier.
			2. The power supply was turned on and off continuously by overloaded status.	The drive method is reviewed.
			3. Ambient temperature of servo motor is over 55℃.	Check environment so that ambient temperature is 0 to 55℃.
			4. Used beyond the specifications of close mounting.	Use within the range of specifications.
46	Servo motor overheat	Servo motor temperature rise actuated the thermal sensor.	1. Ambient temperature of servo motor is over 40℃.	Check environment so that ambient temperature is 0 to 40℃.
			2. Servo motor is overloaded.	1. Reduce load. 2. Check operation pattern. 3. Use servo motor that provides larger output.
			3. Thermal sensor in encoder is faulty.	Change the servo motor.
47	Cooling fan error	The cooling fan of the servo amplifier stopped, or its speed decreased to or below the alarm level.	1. Cooling fan life expiration (Refer to section 2.5.)	Change the cooling fan of the servo amplifier.
			2. Foreign matter caught in the cooling fan stopped rotation.	Remove the foreign matter.
			3. The power supply of the cooling fan failed.	Change the servo amplifier.
50	Overload 1	Load exceeded overload protection characteristic of servo amplifier.	1. Servo amplifier is used in excess of its continuous output current.	1. Reduce load. 2. Check operation pattern. 3. Use servo motor that provides larger output.
			2. Servo system is instable and hunting.	1. Repeat acceleration/ deceleration to execute auto tuning. 2. Change the auto tuning response setting. 3. Set auto tuning to OFF and make gain adjustment manually.
			3. Machine struck something.	1. Check operation pattern. 2. Install limit switches.
			4. Wrong connection of servo motor. Servo amplifier's output terminals U, V, W do not match servo motor's input terminals U, V, W.	Connect correctly.
			5. Encoder faulty. Checking method When the servo motor shaft is rotated with the servo off, the cumulative feedback pulses do not vary in proportion to the rotary angle of the shaft but the indication skips or returns midway.	Change the servo motor.
			6. After Overload 2 (51) occurred, turn OFF/ON the power supply to clear the alarm. Then the overload operation is repeated.	1. Reduce load. 2. Check operation pattern. 3. Use servo motor that provides larger output.

Display	Name	Definition	Cause	Action
51	Overload 2	Machine collision or the like caused max. For the time of the alarm occurrence, refer to the section 10.1.	1. Machine struck something.	1. Check operation pattern. 2. Install limit switches.
			2. Wrong connection of servo motor. Servo amplifier's output terminals U, V, W do not match servo motor's input terminals U, V, W.	Connect correctly.
			3. Servo system is instable and hunting.	1. Repeat acceleration/deceleration to execute auto tuning. 2. Change the auto tuning response setting. 3. Set auto tuning to OFF and make gain adjustment manually.
			4. Encoder faulty. Checking method When the servo motor shaft is rotated with the servo off, the cumulative feedback pulses do not vary in proportion to the rotary angle of the shaft but the indication skips or returns midway.	Change the servo motor.
52	Error excessive	The deviation between the model position and the actual servo motor position exceeds the parameter No.PC01 setting value (initial value: 3 revolutions).	1. Acceleration/deceleration time constant is too small.	Increase the acceleration/deceleration time constant.
			2. Torque limit value set with controller is too small.	Increase the torque limit value.
			3. Motor cannot be started due to torque shortage caused by power supply voltage drop.	1. Check the power supply capacity. 2. Use servo motor which provides larger output.
			4. Position loop gain 1 (parameter No.PB08) value is small.	Increase set value and adjust to ensure proper operation.
			5. Servo motor shaft was rotated by external force.	1. When torque is limited, increase the limit value. 2. Reduce load. 3. Use servo motor that provides larger output.
			6. Machine struck something.	1. Check operation pattern. 2. Install limit switches.
			7. Encoder faulty	Change the servo motor.
			8. Wrong connection of servo motor. Servo amplifier's output terminals U, V, W do not match servo motor's input terminals U, V, W.	Connect correctly.
			9. SSCNETⅢ cable fault	Change the SSCNETⅢ cable.
			10. Optical characteristic of SSCNETⅢ cable deteriorated because vinyl tape and/or wire sheath, which contains migrating plasticizer, adhered to the cable.	Remove the vinyl tape and/or wire sheath, which contains migrating plasticizer, and exchange the cable.
8A	USB communication time-out error	Communication with MR Configurator in test operation mode stopped for longer than the specified time.	1. USB cable breakage.	Change the USB cable.
8E	USB communication error	Serial communication error occurred between servo amplifier and communication device (e.g. personal computer).	1. USB cable fault (Open cable or short circuit)	Change the USB cable.
			2. Communication device (e.g. personal computer) faulty	Change the communication device (e.g. personal computer).

Display	Name	Definition	Cause	Action
(Note) 888	Watchdog	CPU, parts faulty	Fault of parts in servo amplifier Checking method Alarm (888) occurs if power is switched on after disconnection of all cables but the control circuit power supply cable.	Change the servo amplifier.

Note. At power-on, "888" appears instantaneously, but it is not an error.

8.3 Remedies for warnings

CAUTION • If an absolute position counter warning (E3) occurred, always make home position setting again. Not doing so may cause unexpected operation.

POINT

- When any of the following alarms has occurred, do not resume operation by switching power of the servo amplifier OFF/ON repeatedly. The servo amplifier and servo motor may become faulty. If the power of the servo amplifier is switched OFF/ON during the alarms, allow more than 30 minutes for cooling before resuming operation.
  - Excessive regenerative warning (E0)
  - Overload warning 1 (E1)

If E6, E7 or E9 occurs, the servo off status is established. If any other warning occurs, operation can be continued but an alarm may take place or proper operation may not be performed.
Remove the cause of warning according to this section. Use the MR Configurator to refer to a factor of warning occurrence.

Display	Name	Definition	Cause	Action
92	Battery cable disconnection warning	Absolute position detection system battery voltage is low.	1. Battery cable is open.	Repair cable or changed.
			2. Battery voltage supplied from the servo amplifier to the encoder fell to about 3V or less. (Detected with the encoder)	Change the battery.
96	Home position setting warning	Home position setting could not be made.	1. Droop pulses remaining are greater than the in-position range setting.	Remove the cause of droop pulse occurrence
			2. Command pulse entered after clearing of droop pulses.	Do not enter command pulse after clearing of droop pulses.
			3. Creep speed high.	Reduce creep speed.
9F	Battery warning	Voltage of battery for absolute position detection system reduced.	Battery voltage fell to 3.2V or less. (Detected with the servo amplifier)	Change the battery.
E0	Excessive regeneration warning	There is a possibility that regenerative power may exceed permissible regenerative power of built-in regenerative resistor or regenerative option.	Regenerative power increased to 85% or more of permissible regenerative power of built-in regenerative resistor or regenerative option. Checking method Call the status display and check regenerative load ratio	1. Reduce frequency of positioning. 2. Change the regenerative option for the one with larger capacity. 3. Reduce load.

Display	Name	Definition	Cause	Action
E1	Overload warning 1	There is a possibility that overload alarm 1 or 2 may occur.	Load increased to 85% or more of overload alarm 1 or 2 occurrence level. Cause, checking method Refer to 50,51.	Refer to 50, 51.
E3	Absolute position counter warning	Absolute position encoder pulses faulty.	1. Noise entered the encoder.	Take noise suppression measures.
			2. Encoder faulty.	Change the servo motor.
		The multi-revolution counter value of the absolute position encoder exceeded the maximum revolution range.	3. The movement amount from the home position exceeded a 32767 rotation or 37268 rotation in succession.	Make home position setting again.
E4	Parameter warning	Parameter outside setting range	Parameter value set from servo system controller is outside setting range	Set it correctly.
E6	Servo forced stop warning	EM1 is off.	External forced stop was made valid. (EM1 was turned off.)	Ensure safety and deactivate forced stop.
E7	Controller forced stop warning		Forced stop signal was entered into the servo system controller.	Ensure safety and deactivate forced stop.
E8	Cooling fan speed reduction warning	The speed of the servo amplifier decreased to or below the warning level. This warning is not displayed with MR-J3-70B/100B among servo amplifiers equipped with a cooling fan.	Cooling fan life expiration (Refer to section 2.5.)	Change the cooling fan of the servo amplifier.
			The power supply of the cooling fan is broken.	Change the servo amplifier.
E9	Main circuit off warning	Servo-on command was issued with main circuit power off.		Switch on main circuit power.
EC	Overload warning 2	Operation, in which a current exceeding the rating flew intensively in any of the U, V and W phases of the servo motor, was repeated.	During a stop, the status in which a current flew intensively in any of the U, V and W phases of the servo motor occurred repeatedly, exceeding the warning level.	1. Reduce the positioning frequency at the specific positioning address. 2. Reduce the load. 3. Replace the servo amplifier/ servo motor with the one of larger capacity.
ED	Output watt excess warning	The status, in which the output wattage (speed × torque) of the servo motor exceeded the rated output, continued steadily.	Continuous operation was performed with the output wattage (speed × torque) of the servo motor exceeding 150% of the rated output.	1. Reduce the servo motor speed. 2. Reduce the load.

Para conocer los códigos de error del servoamplificador MR-J4, consulte el apéndice D.

6 ALMACENAMIENTO Y ENVÍO

EN ESTE CAPÍTULO:

6.1 Almacenamiento - 117
6.1.1 Almacenamiento a corto plazo - 117
6.1.2 Almacenamiento a largo plazo - 118
6.2 Transporte - 118
6.3 Puesta fuera de servicio - 118

6.1 Almacenamiento

La CM6200 está concebida para ser almacenada en interiores en un ambiente con temperatura y humedad controladas. El almacenamiento adecuado de la máquina CM6200 aumentará su utilidad y evitará daños indebidos.

Antes de guardarla, haga lo siguiente:

1. Limpie la máquina con disolvente para eliminar la grasa, las virutas de metal y la humedad.
2. Drene todos los líquidos de la unidad de acondicionamiento neumático.

Guarde la CM6200 en su contenedor de envío original. Conserve todos los materiales de embalaje para volver a empaquetar la máquina.

6.1.1 Almacenamiento a corto plazo

El almacenamiento a corto plazo se define como tres meses o menos. Para almacenamiento a corto plazo:

1. Retire los ejes de la pieza de trabajo.
2. Retire las herramientas.
3. Retire las mangueras.
4. Retire la máquina de la pieza de trabajo.
5. Limpie la máquina para eliminar la suciedad, la grasa, las virutas de metal y la humedad. Asegúrese de que la máquina esté exenta de suciedad, la grasa, las virutas y otros residuos antes de guardarla.
6. Aplique un material preventivo de la humedad a las superficies no pintadas (LPS-2 para el almacenamiento a corto plazo, LPS-3 para el almacenamiento a largo plazo) para evitar la corrosión.
7. Almacene la máquina en una posición estable en un soporte o en un contenedor de almacenamiento de acuerdo con las políticas de su empresa.

6.1.2 Almacenamiento a largo plazo

El almacenamiento a largo plazo se define como tres meses o más.

Haga lo siguiente para el almacenamiento a largo plazo:

1. Complete los pasos 1-6 para el almacenamiento a corto plazo (Sección 6.1.2 en la página 118).
2. Agregue una bolsa de desecante a la caja de envío. Sustituya de acuerdo con las instrucciones del fabricante.
3. Almacene el contenedor de envío en un ambiente alejado de la luz directa del sol con temperatura < 70ºF y humedad < 50%.

6.2 TRANSPORTE

La CM6200 puede guardarse en su contenedor de envío original.

6.3 PUESTA FUERA DE SERVICIO

Para desmantelar la CM6200 antes de su eliminación, retire el cubo de la mesa giratoria del mandril y deseche el conjunto de accionamiento por separado del resto de los componentes de la máquina. Consulte el Apéndice A para obtener información sobre el ensamblaje de componentes.

APÉNDICE A PLANOS DE ENSAMBLAJE

Lista planos

FIGURA A-1. CONJUNTO DE MESA GIRATORIA (N/P 62028) - - - 120
FIGURA A-2. LISTA DE PIEZAS DEL CONJUNTO DE MESA GIRATORIA (N/P 62028) - - - 121
FIGURA A-3. CONJUNTO DE MESA GIRATORIA (N/P 96031) - - - 122
FIGURA A-4. LISTA DE PIEZAS DEL CONJUNTO DE MESA GIRATORIA PARTS LIST (P/N 96031) - - - 123
FIGURA A-5. CONJUNTO DE PROTECCIÓN DEL CODIFICADOR (N/P 62869) - - - 124
FIGURA A-6. CONJUNTO DE ELEVACIÓN PROBADO CON CARGA (N/P 68425) - - - 125
FIGURA A-7. CONJUNTO DE MONTAJE ID (N/P 62038) - - - 126
FIGURA A-8. CONJUNTO DE PATA DE MANDRIL AJUSTABLE (N/P 89730) - - - 127
FIGURA A-9. CONJUNTO DE PIE NO NIVELADOR (N/P 91317) - - - 128
FIGURA A-10. CONJUNTO DE MONTAJE OD (N/P 62039) - - - 129
FIGURA A-11. CONJUNTO DEL BRAZO DE MECANIZADO (N/P 72676) - - - 130
FIGURA A-12. LISTA DE PIEZAS DEL CONJUNTO DEL BRAZO DE MECANIZADO (N/P 72676) - - - 131
FIGURA A-13. CONJUNTO DE ENCARRILADO DEL CABEZAL FRESADOR DEL BRAZO DE MECANIZADO (N/P 63124) - - - 132
FIGURA A-14. CONJUNTO DEL BRAZO DEL CONTRAPESO (N/P 62031) - - - 133
FIGURA A-15. CONJUNTO DE MONTAJE FRONTAL (N/P 63106) - - - 134
FIGURA A-16. ACCESORIO DE RECTIFICADO CON CONJUNTO DE CABEZAL DE LA HERRAMIENTA (N/P 63239) - - - 135
FIGURA A-17. RECTIFICADORA PARA SP CM6200 CON REDUCTOR DE ENGRANAJES (N/P 63240) - - - 136
FIGURA A-18. RECTIFICADORA PARA SP NEUMÁTICA (N/P 62537) - - - 137
FIGURA A-19. CONJUNTO DE CABEZAL DE FRESADO GIRATORIO DE PLACA (N/P 63250) - - - 138
FIGURA A-20. CONJUNTO DE CABEZAL DE FRESADO Y PERNO DE TRACCIÓN (N/P 73354) - - - 139
FIGURA A-21. CABEZAL DE FRESADO 2-29/32 BRG 8 TIEMPOS #50 CONICIDAD (N/P 72277) - - - 140
FIGURA A-22. LISTA DE PIEZAS DEL CONJUNTO DE CABEZALES DE FRESADO 1 (N/P 72277) - - - 141
FIGURA A-23. LISTA DE PIEZAS DEL CONJUNTO DE CABEZALES DE FRESADO 2 (N/P72277) - - - 142
FIGURA A-24. CONJUNTO DE EXTENSIÓN DEL CABEZAL DE FRESADO (N/P 65840) - - - 143
FIGURA A-25. CONJUNTO DE SERVOACCIONAMIENTO (N/P 83156) - - - 144
FIGURA A-26. CONJUNTO DE SERVOACCIONAMIENTO (N/P 62032) - - - 145
FIGURA A-27. CONJUNTO DE PUNTO ÚNICO (N/P 83100) - - - 146
FIGURA A-28. LISTA DE PIEZAS DEL CONJUNTO DE UN SOLO PUNTO (N/P 83100) - - - 147
FIGURA A-29. CONJUNTO DE UN SOLO PUNTO (N/P 62037) - - - 148
FIGURA A-30. LISTA DE PIEZAS DEL CONJUNTO DE UN SOLO PUNTO (N/P 62037) - - - 149
FIGURA A-31. CONJUNTO DE UNIÓN ROTATIVA (N/P 63121) - - - 150
FIGURA A-32. CONJUNTO DE LA UNIDAD DE ACONDICIONAMIENTO NEUMÁTICO (N/P 97742) - - - 151
FIGURA A-33. CONJUNTO DE CONTROL DE AIRE PARA ALIMENTACIÓN NEUMÁTICA (N/P 63156) - - - 152
FIGURA A-34. CONJUNTO DE ACCIONAMIENTO HIDRÁULICO DE PUNTO ÚNICO (N/P 83186) - - - 153
TABLA A-1. PIEZAS DE REPUESTO - - - 154
TABLA A-2. KIT DE HERRAMIENTAS N/P 62029 - - - 158

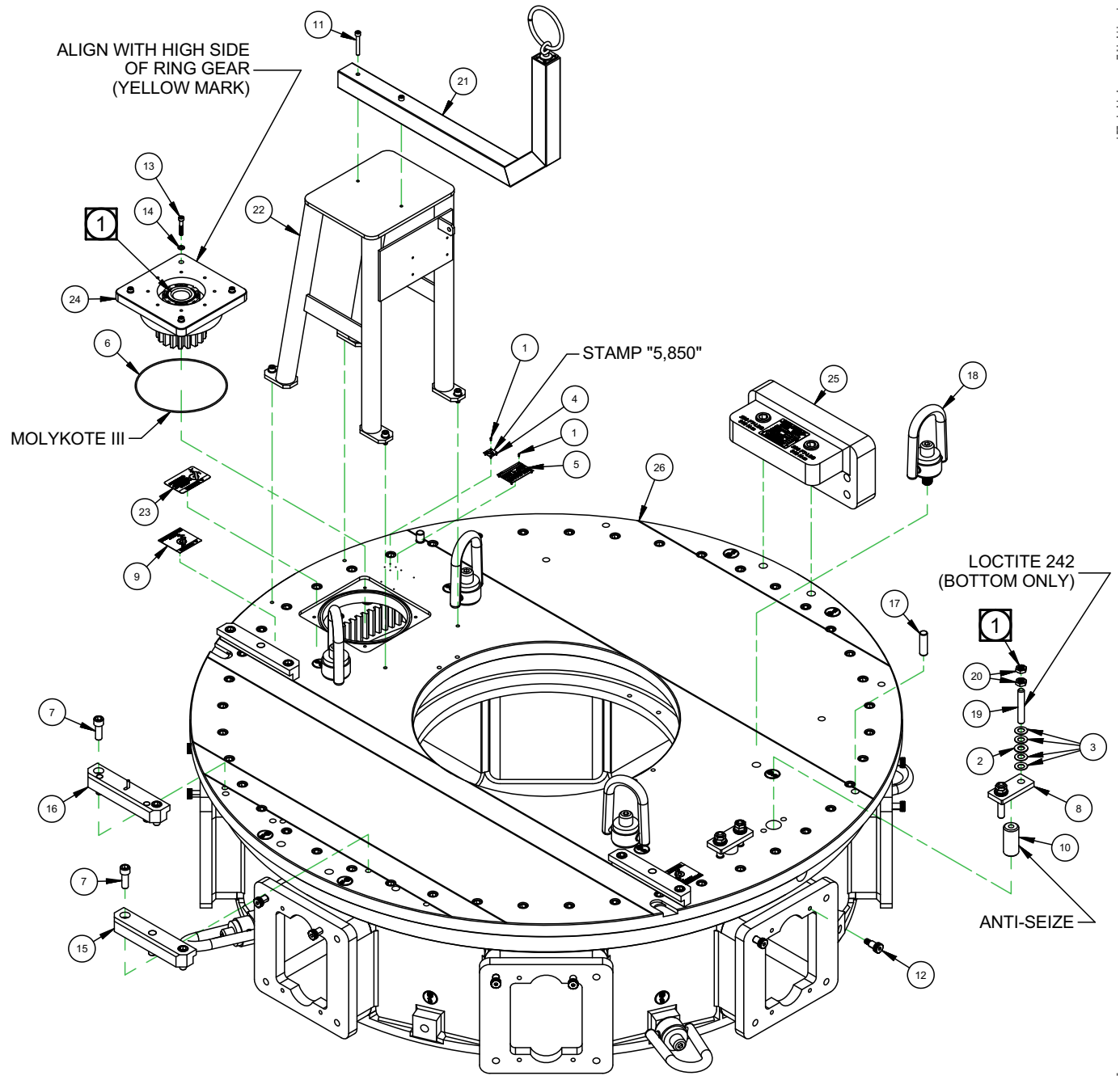

NOTES

1 ADJUST DRAG BRAKE JAM NUTS UNTIL TABLE ROTATES AT PINION WITH 4-5 IN-LBS OF TORQUE

FIGURA A-1. CONJUNTO DE MESA GIRATORIA (N/P 62028)

1	8	10588	SCREW DRIVE #2 x 1/4 HOLE SIZE .089
2	4	11693	WASHER 5/8 FLTW SAE
3	16	27172	WASHER SPRING BELLEVILLE 5/8 X 1-1/4 X .040
4	1	29152	PLATE MASS CE
5	1	29154	PLATE SERIAL YEAR MODEL CE 2.0 X 3.0
6	1	44658	O-RING 1/8 X 8-3/4 ID X 9 OD SILICONE
7	8	46222	SCREW M16 X 2.0 X 55mm SHCS
8	2	46232	BAR BRAKE SHOE CLAMP
9	2	46286	LABEL CIRCULAR MILL CRUSH HAZARD
10	2	54165	SHOE BRAKE 1.6m CIRCULAR MILL
11	2	57874	SCREW M8 X 1.25 X 60MM SHCS
12	16	58202	SCREW 16MM DIA X 20MM X M12 X 1.75 SHLDCS
13	4	59349	SCREW M8 X 1.25 X 45MM SHCS
14	4	59432	WASHER M8 FLTW 16MM OD 1.6MM THICK
15	3	62601	CLAMP ARM PINNED
16	1	62602	CLAMP SAFETY STOP ASSY
17	2	62605	PIN DOWEL 3/4 DIA X 3
18	4	62606	HOIST RING M24 X 3 X 38MM 70 ID X 130 OD 225 OAL 9250 LBS 4200 KG SWIVEL
19	4	62612	STUD THREADED M16 X 2 X 100MM FULL THD
20	8	62613	NUT M16 X 2.0 JAMN
21	1	62616	TOWER HOSE CM6200
22	1	62869	ASSY GUARD ENCODER CM6200
23	1	62884	LABEL FLANGE FACERS IMPACT HAZARD
24	1	63743	ASSY PINION DRIVE CM6200
25	1	68425	ASSY LIFTING CM6200 LOAD TESTED 5000 KG
26	1	96031	ASSY TABLE ROTARY CM6200
ITEM	QTY	PART No.	DESCRIPTION
PARTS LIST			

FIGURA A-2. LISTA DE PIEZAS DEL CONJUNTO DE MESA GIRATORIA (N/P 62028)

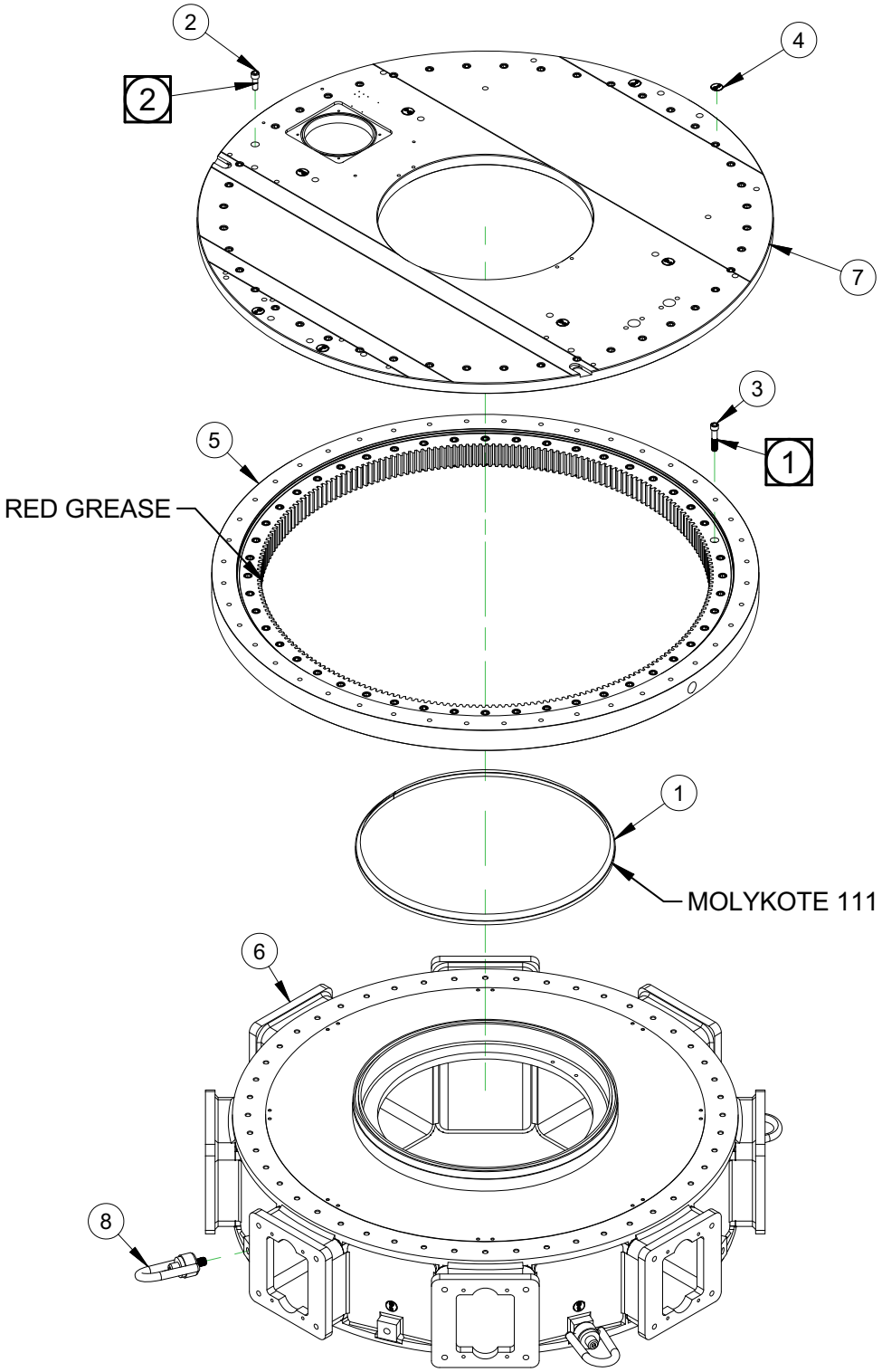

SEE SHEET 2 FOR PARTS LIST & TORQUE SPECIFICATIONS

FIGURA A-3. CONJUNTO DE MESA GIRATORIA (N/P 96031)

PARTS LIST			
ITEM	QTY	P/N:	DESCRIPTION
1	1	45623	PUSH-ON TRIM SEAL - FLEXIBLE SEGMENTED CORE
2	44	46222	SCREW M16 X 2.0 X 55mm SHCS
3	48	58106	SCREW M16 X 2.0 X 80 SHCS
4	16	59039	LABEL WARNING LIFT POINT ROUND 1.5"
5	1	61565	ASSY BRG AND GEAR KAYDON 66 OD PRELOADED
6	1	61967	HUB CHUCK CM6200
7	1	62600	PLATE TABLE ROTARY CM6200
8	4	62606	HOIST RING M24 X 3 X 38MM 70 ID X 130 OD 225 OAL 9250 LBS 4200 KG SWIVEL

(1) TORQUE SPECIFICATION: CM6200 BEARING TO CHUCK

LABEL BOLT HOLES FROM 1 TO 48 CLOCKWISE AROUND THE BEARING

TIGHTEN THE BOLTS USING THE FOLLING PATTERN IN THREE STAGES 70 FT-LBS, 140 FT-LBS, 200 FT-LBS. NOTE: TORQUE VALUES ARE FOR LUBRICATED FASTENERS. ENSURE TO USE BLUE LOCTITE DURING ASSEMBLY.

1 - 25 - 13 - 37 7 - 31 - 19 - 43 4 - 28 - 16 - 40 10 - 34 - 22 - 46
2 - 26 - 14 - 38 3 - 27 - 15 - 39 5 - 29 - 17 - 41 6 - 30 - 18 - 42
8 - 32 - 20 - 44 9 - 33 - 21 - 45 11 - 35 - 23 - 47 12 - 36 - 24 - 48

(2) TORQUE SPECIFICATION: CM6200 TOP PLATE TO BEARING

LABEL BOLT HOLES FROM 1 TO 44 CLOCKWISE AROUND THE TOP PLATE

TIGHTEN THE BOLTS USING THE FOLLING PATTERN IN THREE STAGES 70 FT-LBS, 140 FT-LBS, 200 FT-LBS. NOTE: TORQUE VALUES ARE FOR LUBRICATED FASTENERS. ENSURE TO USE BLUE LOCTITE DURING ASSEMBLY.

1 - 23 - 12 - 34 6 - 28 - 17 - 39 3 - 25 - 14 - 36 8 - 30 - 19 - 41
4 - 26 - 15 - 37 9 - 31 - 20 - 42 2 - 24 - 13 - 35 7 - 29 - 18 - 40
5 - 27 - 16 - 38 10 - 32 - 21 - 43 11 - 33 - 22 - 44

FIGURA A-4. LISTA DE PIEZAS DEL CONJUNTO DE MESA GIRATORIA PARTS LIST (P/N 96031)

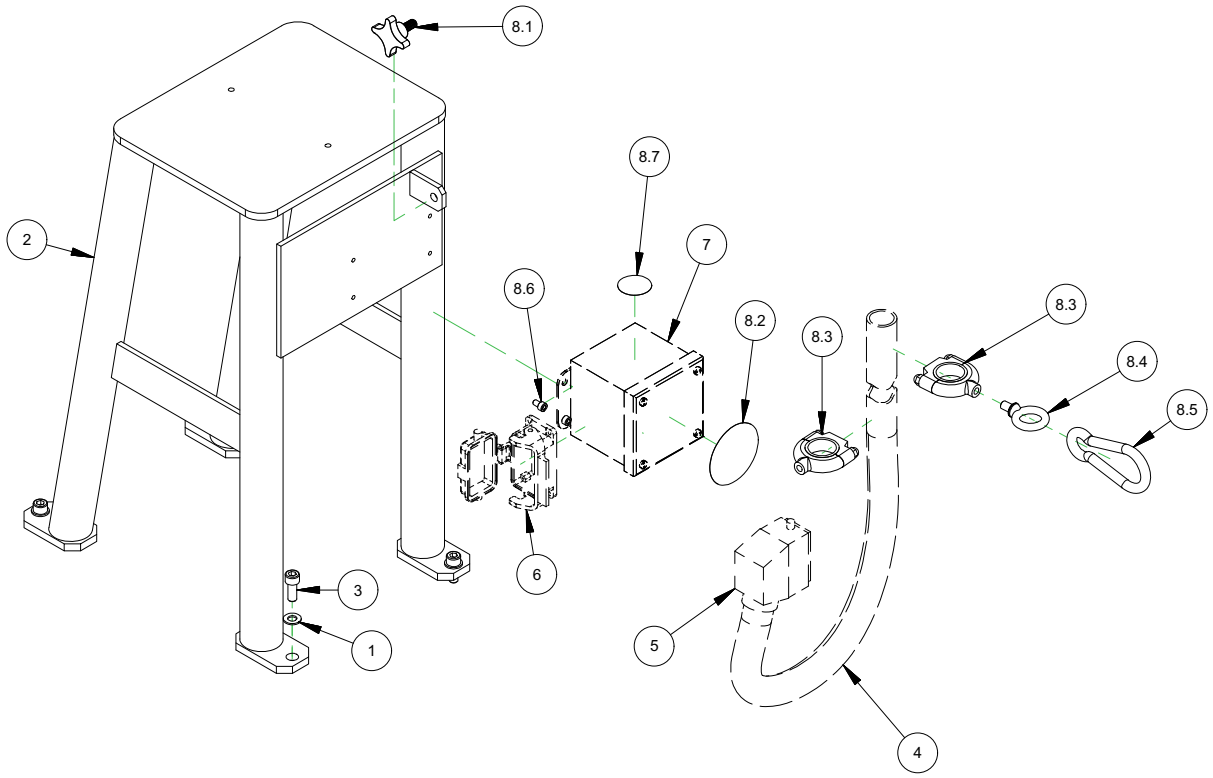

* ITEMS 4, 5, 6, AND 7 IN PHANTOM ARE FOR REFERENCE ONLY

PARTS LIST			
ITEM	QTY	PART No.	DESCRIPTION
1	4	62875	WASHER M10 FLTW DIN 125
2	1	62615	GUARD ENCODER CM6200
3	4	35339	SCREW M10 X 1.5 X 25mm SHCS
4	1	N/A*	CARFLEX X-FLEX 1 INCH NONMETALLIC CONDUIT
5	1	N/A*	HAN 10B-gs-R-29 HOOD SIDE ENTRY METAL
6	1	N/A*	HAN 10B-agg-LB-K HOUSING BULKHEAD MOUNTING METAL
7	1	N/A*	4 X 4 X 4 SCREW COVER SC JUNCTION BOX
8	1	63180	ASSY HARDWARE HOSE AND ENCODER GUARD CM6200
8.1	1	55463	KNOB FOUR ARM 2 DIA X 3/8-16 THREAD 3/4 L MODIFIED
8.2	1	82195	LABEL WARNING - LOCKOUT/ELECTRICAL GRAPHIC 3" DIA BLUE
8.3	2	55290	CONDUIT CLEAN ROOM HANGER 1-1/4 OD 3/8-16 THREAD
8.4	1	19239	EYE LIFTING 3/8 MODIFIED
8.5	1	55393	SPRING SNAP 5/8 SNAP O X 4-3/4 L BLK
8.6	4	57281	SCREW M6 X 1.0 X 10MM SHCS
8.7	1	59044	LABEL WARNING - CONSULT OPERATOR'S MANUAL

FIGURA A-5. CONJUNTO DE PROTECCIÓN DEL CODIFICADOR (N/P 62869)

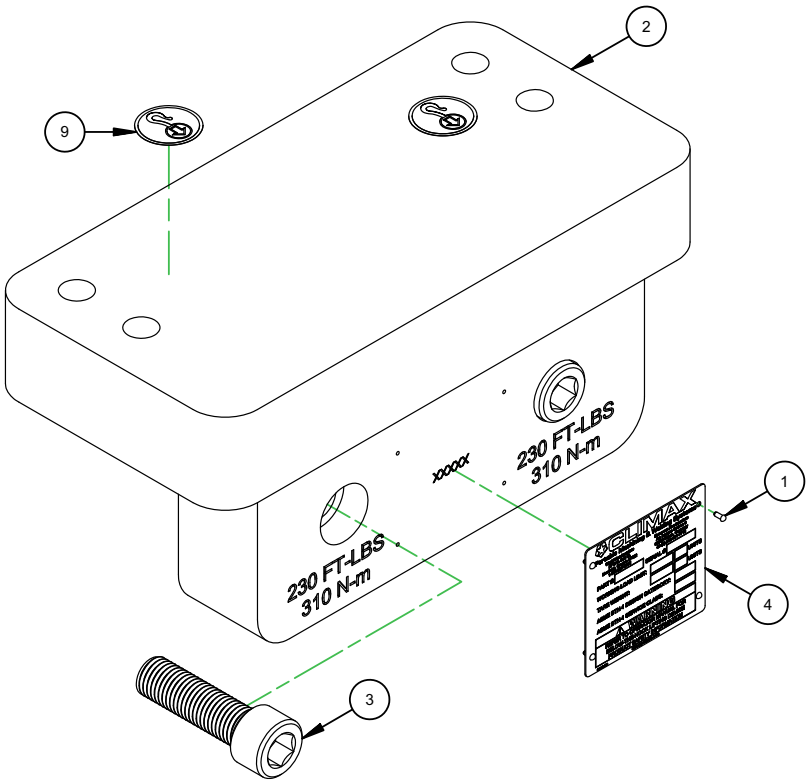

BELOW THE HOOK LIFTING INFO TAG

PART NUMBER:	68425
SERIAL NUMBER:	
WORKING LOAD LIMIT:	6000 KG
TARE WEIGHT:	55 KG
ASME BTH-1 DESIGN CATEGORY:	A
ASME BTH-1 SERVICE CLASS:	0

PARTS LIST			
ITEM	QTY	PART No.	DESCRIPTION
1	4	10588	SCREW DRIVE #2 x 1/4 HOLE SIZE .089
2	1	68423	PLATE LIFTING CM6200
3	2	68426	SCREW M24 X 3.0 X 80MM SHCS
4	1	69422	TAG BELOW THE HOOK LIFTING INFO AND SERIAL NUMBER
9	2	59039	LABEL WARNING LIFT POINT ROUND 1.5"

FIGURA A-6. CONJUNTO DE ELEVACIÓN PROBADO CON CARGA (N/P 68425)

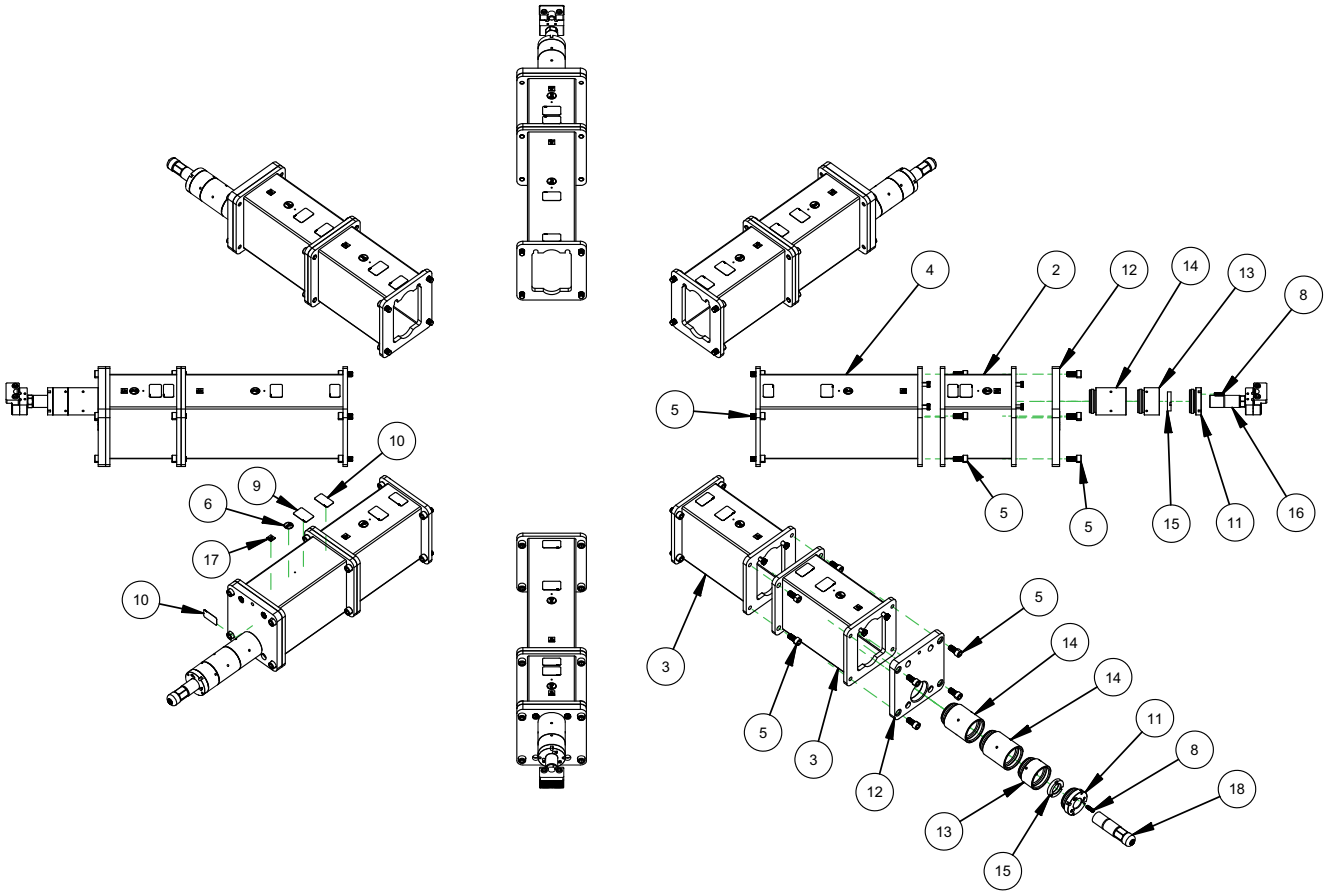

PARTS LIST			
ITEM	QTY	PART No.	DESCRIPTION
1	1	19700	(NOT SHOWN) CONTAINER SHIPPING FLAT ROOF 20 X 8.75 X 10.5
2	4	57724	WELDMENT STANDOFF 12.5 FF8200
3	8	57851	WELDMENT STANDOFF 17.5 FF8200
4	4	57852	WELDMENT STANDOFF 27.5 FF8200
5	96	58203	SCREW M20 X 2.5 X 40MM SHCS
6	16	59039	LABEL WARNING LIFT POINT ROUND 1.5"
7	4	63954	(NOT SHOWN) LIFTING EYE M6 X 1 X 12 THREAD 19 ID 460 LBS 210 KG
8	24	74499	SCREW M12 X 1.75 X 40mm SSSFP
9	16	79385	LABEL WARNING - LIFT SUB ASSY ONLY GRAPHIC 2 X 3
10	24	82157	LABEL CAUTION - TORQUE 150 FT-LBS (203 N-M) GRAPHIC 3 X 1.7
11	8	89717	CAP END 4.50 DIA 4-4 OD THREAD 2-8 ID THREAD
12	8	89718	PLATE BASE CHUCK
13	8	89720	LEG CHUCK TUBE 4.5 OD X 2.5 THREADED
14	12	89721	LEG CHUCK TUBE 4.5 OD X 5.0 THREADED
15	8	89726	NUT JACKING LOCK 2-8
16	4	90836	ASSY FOOT CHUCK ADJUSTABLE
17	16	91217	PLATE MASS CE 1.0 X 1.0 KG ADHESIVE BACKED
18	4	91232	ASSY FOOT NON LEVELING GRIPPER LARGE FF LINE

FIGURA A-7. CONJUNTO DE MONTAJE ID (N/P 62038)

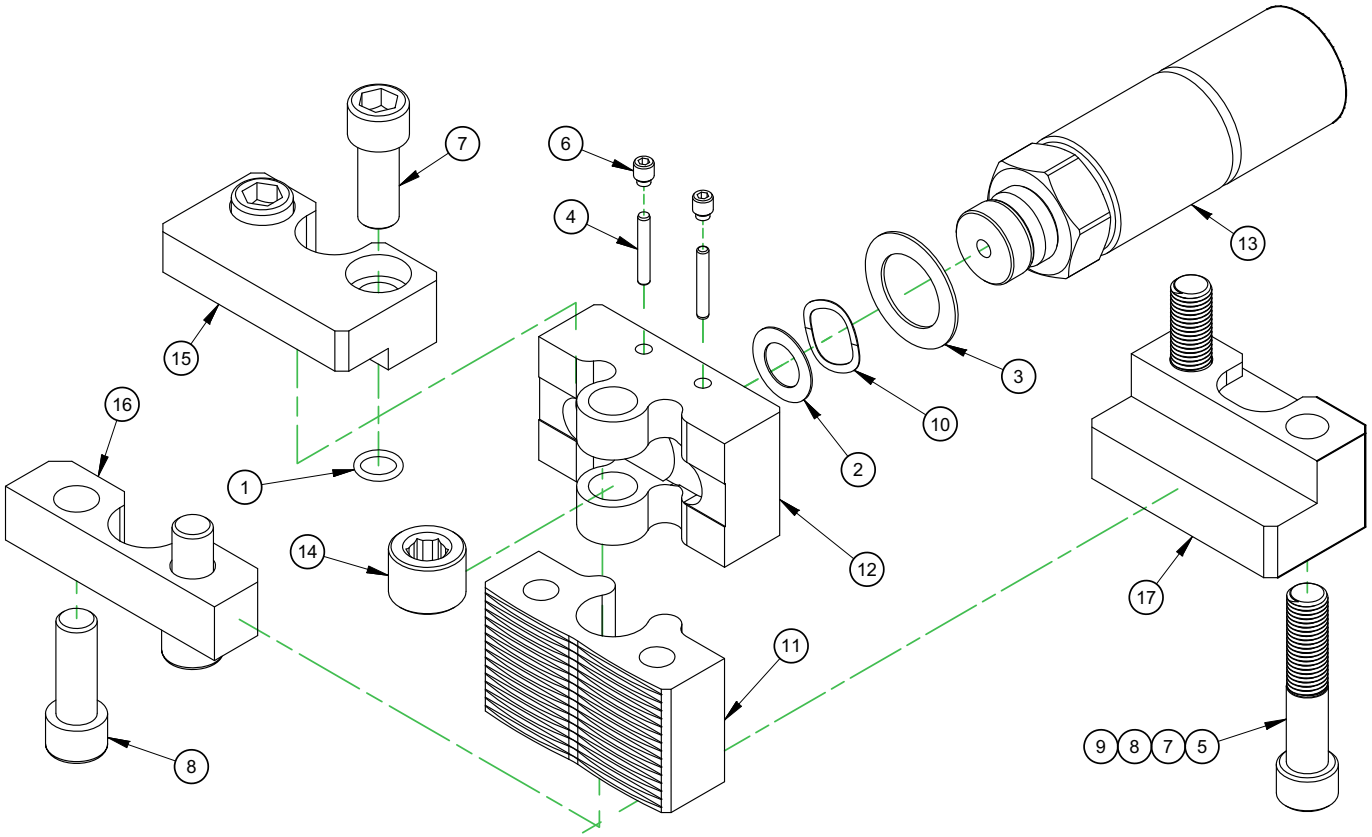

PARTS LIST			
ITEM	QTY	PART No.	DESCRIPTION
1	2	10611	RING O 3/32 X 9/16 ID X 3/4 OD
2	1	11739	WASHER THRUST .750 ID X 1.250 OD X .0312
3	1	16666	WASHER THRUST 1.250 ID X 1.937 OD X .060
4	2	19735	PIN DOWEL 3/16 DIA X 1-1/4
5	2	44227	SCREW M16 X 2.0 X 200 SHCS
6	2	44257	SCREW M8 X 1.25 X 10mm SSSDP
7	4	44905	SCREW M16 X 2.0 X 40mm SHCS
8	2	46222	SCREW M16 X 2.0 X 55mm SHCS
9	2	58106	SCREW M16 X 2.0 X 80 SHCS
10	1	58244	WASHER SPRING WAVE 1.235 OD X .961 ID X .014
11	1	63582	JAW ADJUSTER CM6200
12	1	63583	BASE ADJUSTER CM6200
13	1	63584	JAW SCREW CM6200
14	1	63585	SCREW M30 X 1.5 X .875 HOLLOW LOCK MOD
15	1	63586	FINGER SETUP EXTENSION CM6200
16	1	63842	RESTRAINT SAFETY WELD PLATE CM6200
17	1	63853	CLAMP INTERNAL FLANGE CM6200
18	2	64086	SCREW M16 X 2.0 X 120 SHCS
19	2	64087	SCREW M16 X 2.0 X 160 SHCS

FIGURA A-8. CONJUNTO DE PATA DE MANDRIL AJUSTABLE (N/P 89730)

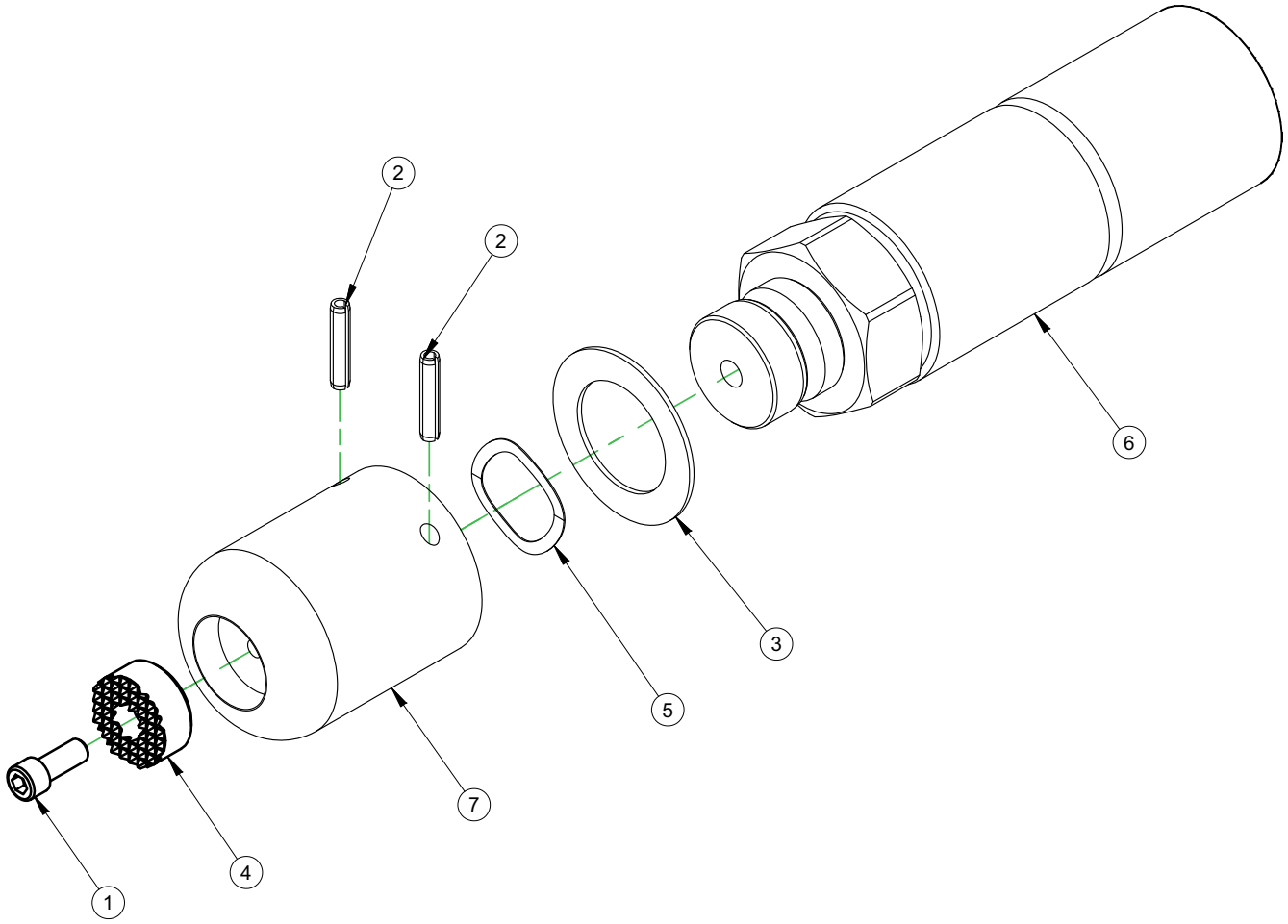

PARTS LIST			
ITEM	QTY	PART No.	DESCRIPTION
1	1	12418	SCREW 1/4-20 X 5/8 SHCS
2	2	12959	PIN ROLL Ø3/16 X 1
3	1	16666	WASHER THRUST 1.250 ID X 1.937 OD X .060
4	1	41644	GRIPPER SERRATED HSS 1 DIAM X 1/2 CBORED
5	1	58244	WASHER SPRING WAVE 1.235 OD X .961 ID X .014
6	1	63584	JAW SCREW CM6200
7	1	91186	CAP FOOT NON LEVELING GRIPPER CM6200

FIGURA A-9. CONJUNTO DE PIE NO NIVELADOR (N/P 91317)

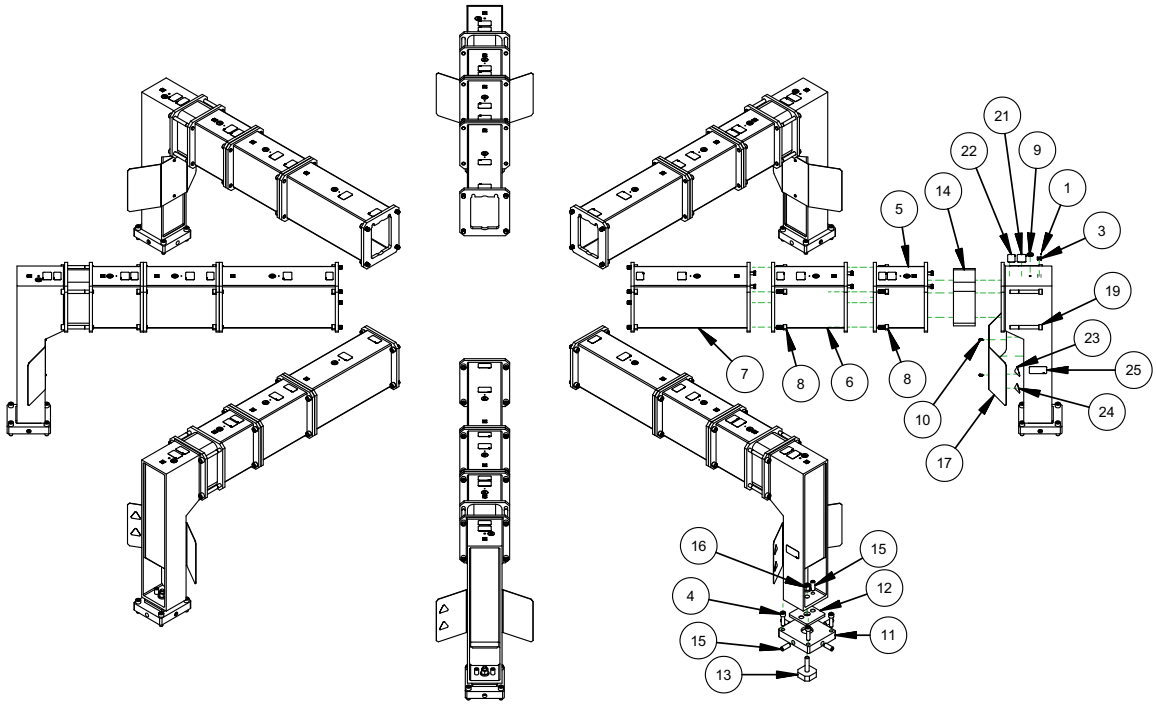

PARTS LIST			
ITEM	QTY	PART No.	DESCRIPTION
1	128	10588	SCREW DRIVE #2 x 1/4 HOLE SIZE .089
2	1	19700	(NOT SHOWN) CONTAINER SHIPPING FLAT ROOF 20 X 8.75 X 10.5
3	32	29152	PLATE MASS CE
4	32	56192	SCREW M20 X 2.5 X 70 MM SHCS
5	8	57724	WELDMENT STANDOFF 12.5 FF8200
6	8	57851	WELDMENT STANDOFF 17.5 FF8200
7	8	57852	WELDMENT STANDOFF 27.5 FF8200
8	96	58203	SCREW M20 X 2.5 X 40MM SHCS
9	32	59039	LABEL WARNING LIFT POINT ROUND 1.5"
10	16	59827	SCREW M8 X 1.25 X 16MM BHSCS
11	8	60751	PLATE CENTERING OD MOUNT FF8200
12	8	60752	PLATE WASHER OD MOUNT FF8200
13	8	60753	STUD HOLD DOWN M24 OD MOUNT FF8200
14	8	60755	STANDOFF 5 INCH OD MOUNT FF8200
15	48	60756	SCREW M24 X 3.0 X 60MM SSSFP
16	8	60757	NUT M24 X 3.0 FLANGED
17	8	61433	SHIELD OD MOUNT FF8200
18	8	62687	LEG VERTICAL SUPPORT OD MOUNT CM6200
19	32	63935	SCREW M20 X 2.5 X 170MM SHCS
20	4	63954	(NOT SHOWN) LIFTING EYE M6 X 1 X 12 THREAD 19 ID 460 LBS 210 KG
21	32	79385	LABEL WARNING - LIFT SUB ASSY ONLY GRAPHIC 2 X 3
22	32	82157	LABEL CAUTION - TORQUE 150 FT-LBS (203 N-M) GRAPHIC 3 X 1.7
23	8	82163	LABEL WARNING - HAND CRUSH GRAPHIC 1.95"
24	8	82164	LABEL WARNING - BODY CRUSH GRAPHIC 1.95"
25	8	82172	LABEL DANGER - GUARDS OD MOUNT GRAPHIC 4 X 2

FIGURA A-10. CONJUNTO DE MONTAJE OD (N/P 62039)

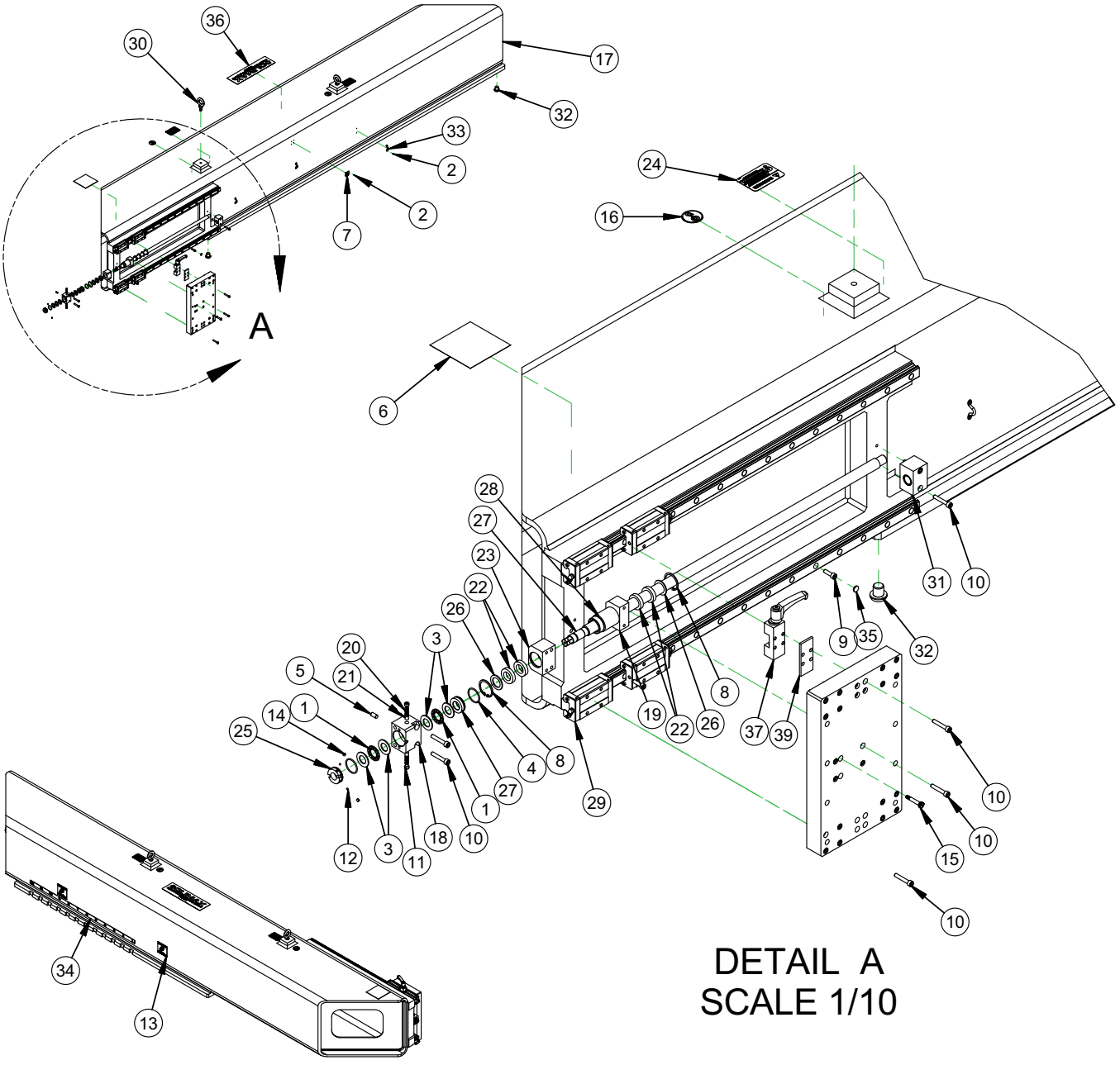

FIGURA A-11. CONJUNTO DEL BRAZO DE MECANIZADO (N/P 72676)

PARTS LIST			
ITEM	QTY	P/N:	DESCRIPTION
1	2	10538	BRG THRUST .625 ID X 1.125 OD X .0781
2	10	10588	SCREW DRIVE #2 x 1/4 HOLE SIZE .089
3	4	11165	WASHER THRUST .625 ID X 1.125 OD X .060
4	2	15731	RING O 1/16 X 1 ID X 1-1/8 OD
5	1	20166	PIN DOWEL 1/4 DIA X 1/2
6	1	27462	LABEL WARNING STICKER SINGLE POINT MACHINES
7	1	29152	PLATE MASS CE
8	2	33777	RING SNAP 1-3/16 ID (30MM)
9	30	35009	SCREW M6 X 1.0 X 20 SHCS
10	28	35504	SCREW M6 X 1.0 X 35mm SHCS
11	2	36087	SCREW M8 X 1.25 X 6MM SSSFP
12	2	43489	BALL NYLON 1/8 DIA
13	2	46286	LABEL CIRCULAR MILL CRUSH HAZARD
14	2	53365	SCREW M4 X 0.7 X 4 mm SSSFP
15	2	57581	SCREW 6MM DIA X 25MM X M5 X 0.8 SHLDCS
16	2	59039	LABEL WARNING LIFT POINT ROUND 1.5"
17	1	61980	TOOL ARM CM6200
18	1	62281	BEARING BLOCK BALLSCREW 20MM
19	1	62321	HOLDER FELT WIPER MILLING HEAD
20	12	62376	WASHER SPRING BELLEVILLE 1/8 ID X 1/4 OD X .013 THK
21	2	62378	ROD POLYURETHANE 1/4 DIA X 1/4 LENGTH 95 SHORE A
22	4	62379	SEAL FELT 16MM BALL SCREW 1.015 OD MILLING HEAD
23	1	62423	MOUNT BALL NUT MILLING HEAD
24	2	62888	LABEL DANGER PART LIFT POINT ONLY 2 X 3
25	1	62898	BRG RETAINING NUT 5/8-18 O-RING SEAL SETSCREW LOCK
26	2	62903	WASHER SHIM .75 ID 1.125 OD .062 THICK STEEL
27	1	62930	BALL SCREW 20MM RADIAL TRAVEL CM6200
28	1	62960	BALL SCREW NUT 20MM X 5MM LEAD LEFT HAND 33 MM OD EICHENBERGER ROUND
29	2	62961	SLIDE RAIL THK SHS25 880MM LG PRELOADED METAL SCRAPERS 2 BLOCKS
30	2	62964	LIFTING EYE M12 X 1.75 X 24 THREAD 30 ID 2270 LBS 1030 KG
31	1	62965	TAIL SUPPORT BALL SCREW RADIAL FEED
32	2	62969	SCREW 3/4-10 X 3/4 BHSCS
33	3	64133	GUIDE WIRE ROPE 3/8"
34	1	64156	LABEL COUNTERWEIGHT & ARM POSITION CM6200
35	30	68501	CAP RAIL 25MM METAL THK SHS
36	1	70228	LABEL CLIMAX LOGO 3.5 X 12.5
37	1	72262	ZIMMER BRAKE 25mm RAIL
38	1	72675	PLATE RADIAL TRAVEL CM6200
39	1	72869	ADAPTER BRAKE 25mm RAIL 4mm THICK

FIGURA A-12. LISTA DE PIEZAS DEL CONJUNTO DEL BRAZO DE MECANIZADO (N/P 72676)

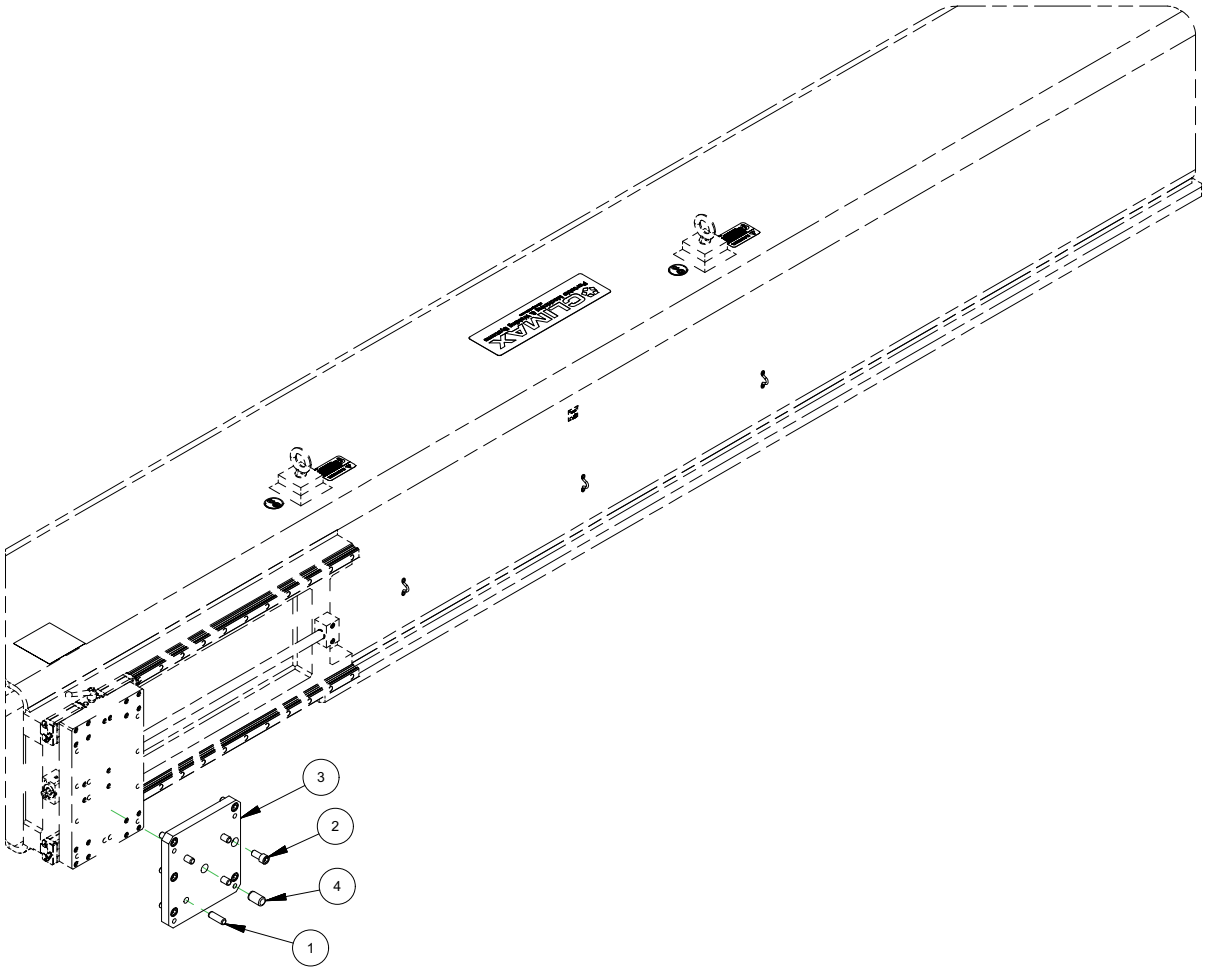

PARTS LIST			
ITEM	QTY	PART No.	DESCRIPTION
1	4	11832	PIN DOWEL 1/2 DIA X 1-1/2
2	6	42094	SCREW M12 X 1.75 X 25mm SHCS
3	1	62921	PLATE MILL TRAMMING CM6200
4	1	63557	PIN DOWEL 3/4 DIA X 1-1/4

FIGURA A-13. CONJUNTO DE ENCARRILADO DEL CABEZAL FRESADOR DEL BRAZO DE MECANIZADO (N/P 63124)

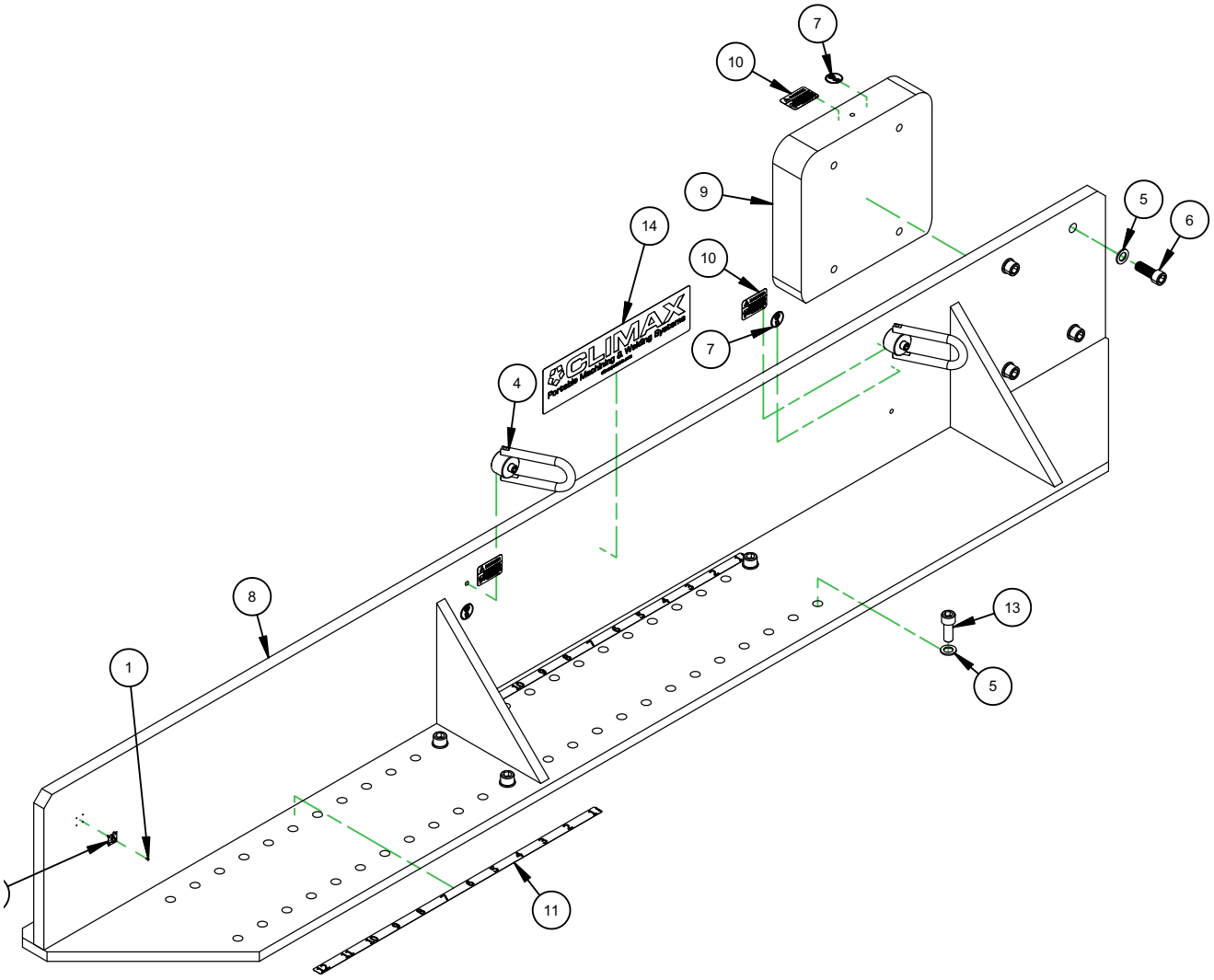

PARTS LIST			
ITEM	QTY	P/N:	DESCRIPTION
1	4	10588	SCREW DRIVE #2 x 1/4 HOLE SIZE .089
2	1	29152	PLATE MASS CE
4	2	43001	HOIST SWIVEL RING M12 X 1.75 1050 KG
5	8	57888	WASHER FIXTURING 21MM ID X 35MM OD X 3MM CASE HARDENED
6	4	58743	SCREW M20 X 2.5 X 55mm SHCS
7	3	59039	LABEL WARNING LIFT POINT ROUND 1.5"
8	1	62059	ARM COUNTERWEIGHT CM6200
9	1	62060	COUNTERWEIGHT CM6200
10	3	62888	LABEL DANGER PART LIFT POINT ONLY 2 X 3
11	2	64156	LABEL COUNTERWEIGHT & ARM POSITION CM6200
13	4	40459	SCREW M20 X 2.5 X 50 mm SHCS
14	1	70229	LABEL CLIMAX LOGO 4.75 X 18

FIGURA A-14. CONJUNTO DEL BRAZO DEL CONTRAPESO (N/P 62031)

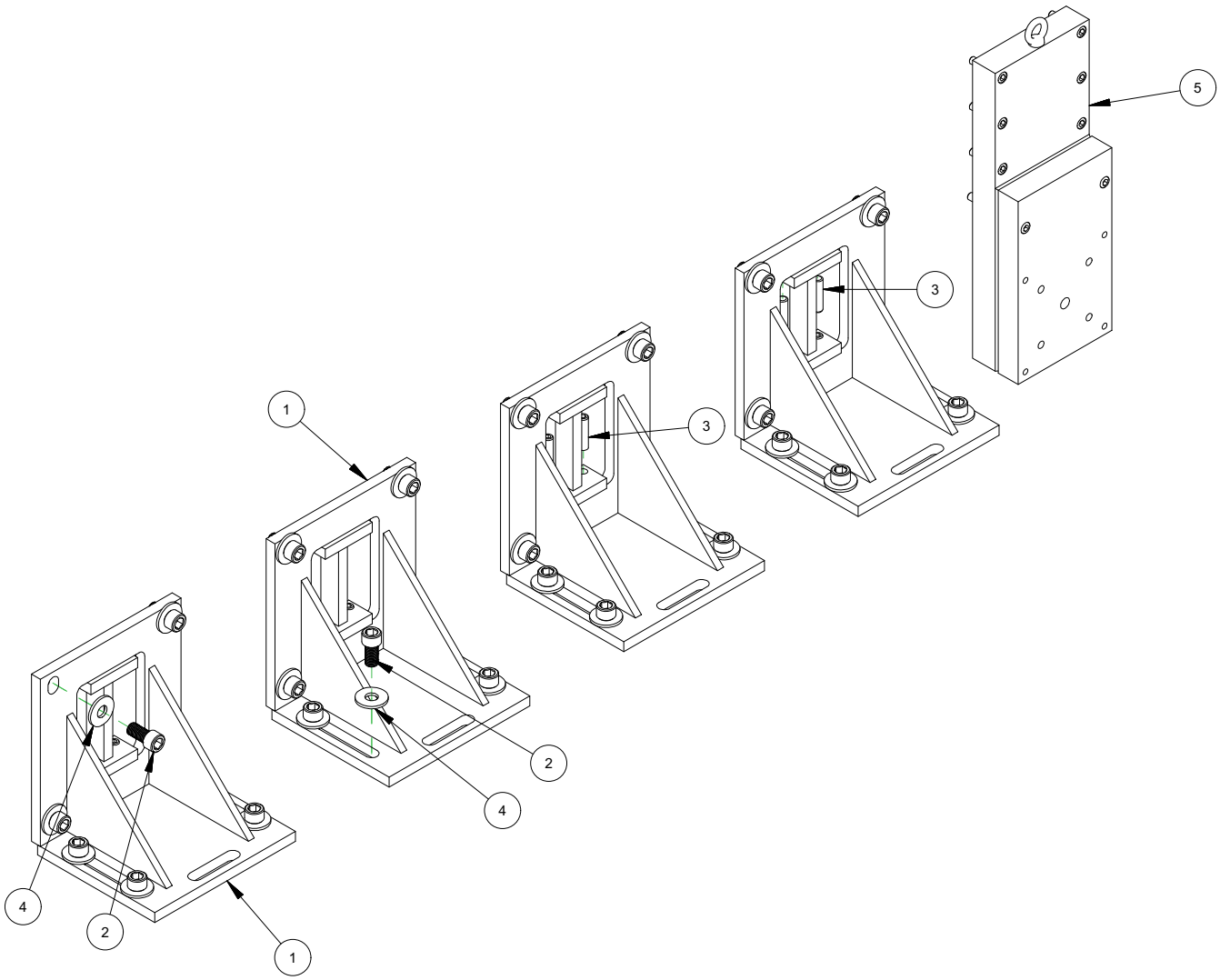

5	1	65840	ASSY EXTENSION MILLING HEAD
4	32	12339	WASHER 3/4 FLATW
3	16	57348	SCREW M16 X 2 X 60mm SSSFP
2	32	58203	SCREW M20 X 2.5 X 40MM SHCS
1	4	62887	BRACKET FACE MOUNT CM6200
ITEM	QTY	PART No.	DESCRIPTION
PARTS LIST			

FIGURA A-15. CONJUNTO DE MONTAJE FRONTAL (N/P 63106)

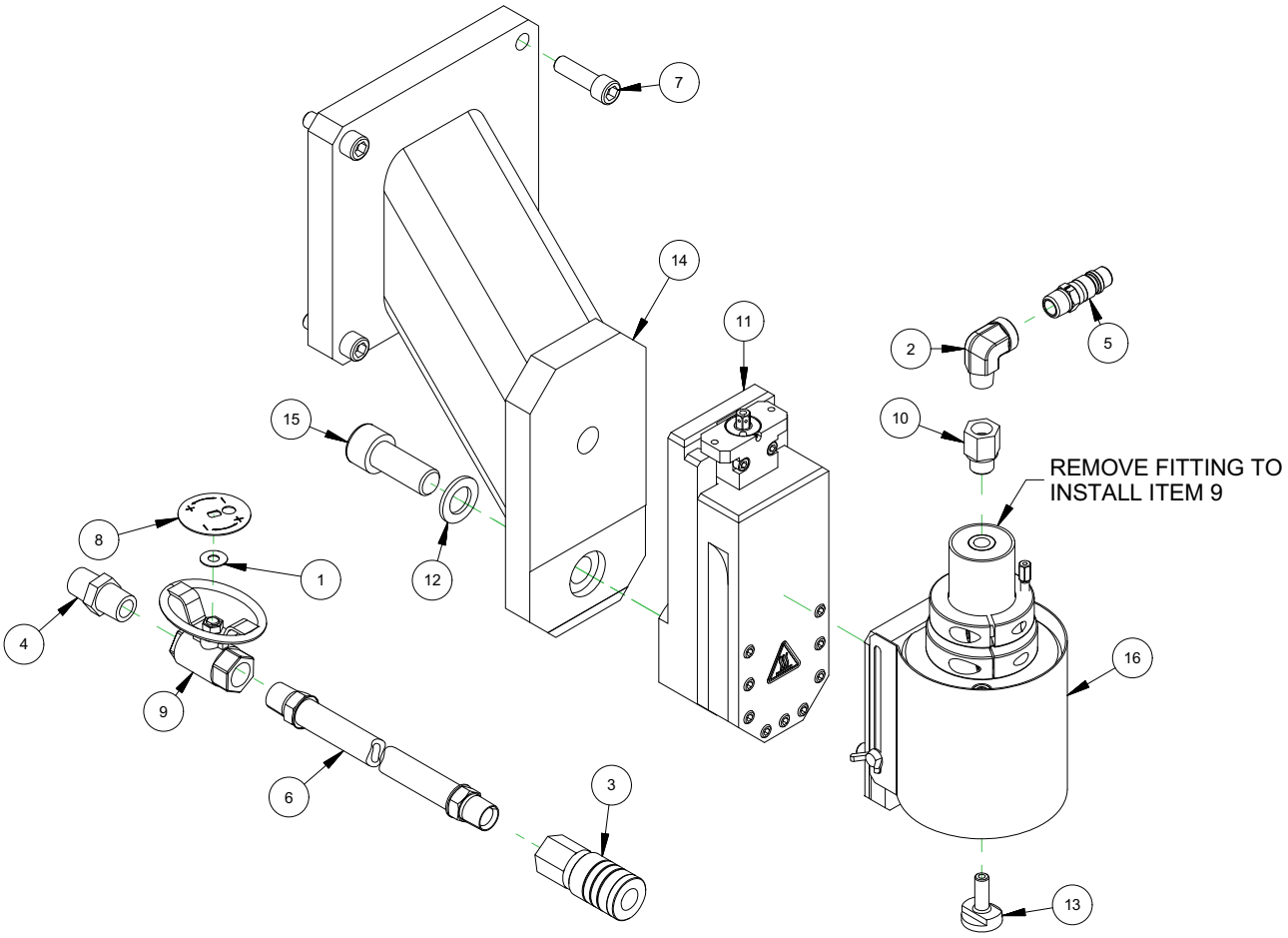

PARTS LIST			
ITEM	QTY	PART No.	DESCRIPTION
1	1	10770	WASHER THRUST .75 OD X .312 ID X .03
2	1	11132	FTG ELBOW 3/8 NPTM X 3/8 NPTF STREET 90 DEG
3	1	13208	FTG QUICK COUPLER 1/2B 1/2NPTF FEMALE AIR
4	1	14704	FTG NIPPLE 1/2NPTM CLOSE HEX
5	1	16615	FTG QUICK COUPLER 1/2B 3/8 NPTM MALE AIR
6	1	32196	HOSE ASSY 801 1/2 X 1/2 NPTMS ENDS X 180
7	4	35215	SCREW M12 X 1.75 X 40mm SHCS
8	1	35772	LABEL DIRECTION OVAL HANDLE BALL VALVE
9	1	36328	VALVE BALL 1/2NPTF OVAL HANDLE
10	1	52734	FTG ADPTER 3/8 BSPP MALE X 3/8 NPTF
11	1	57781	TOOL HEAD ASSY FF LINE
12	1	57888	WASHER FIXTURING 21MM ID X 35MM OD X 3MM CASE HARDENED
13	1	62624	ARBOR GRINDING WHEEL CBN 10MM SHANK M8 THREAD
14	1	62984	ADAPTER SINGLE POINT TOOL HEAD TO MILLING ARM
15	1	63018	SCREW M20 X 1.5 X 50MM SHCS
16	1	63063	ASSY GRINDING ATTACHMENT

FIGURA A-16. ACCESORIO DE RECTIFICADO CON CONJUNTO DE CABEZAL DE LA HERRAMIENTA (N/P 63239)

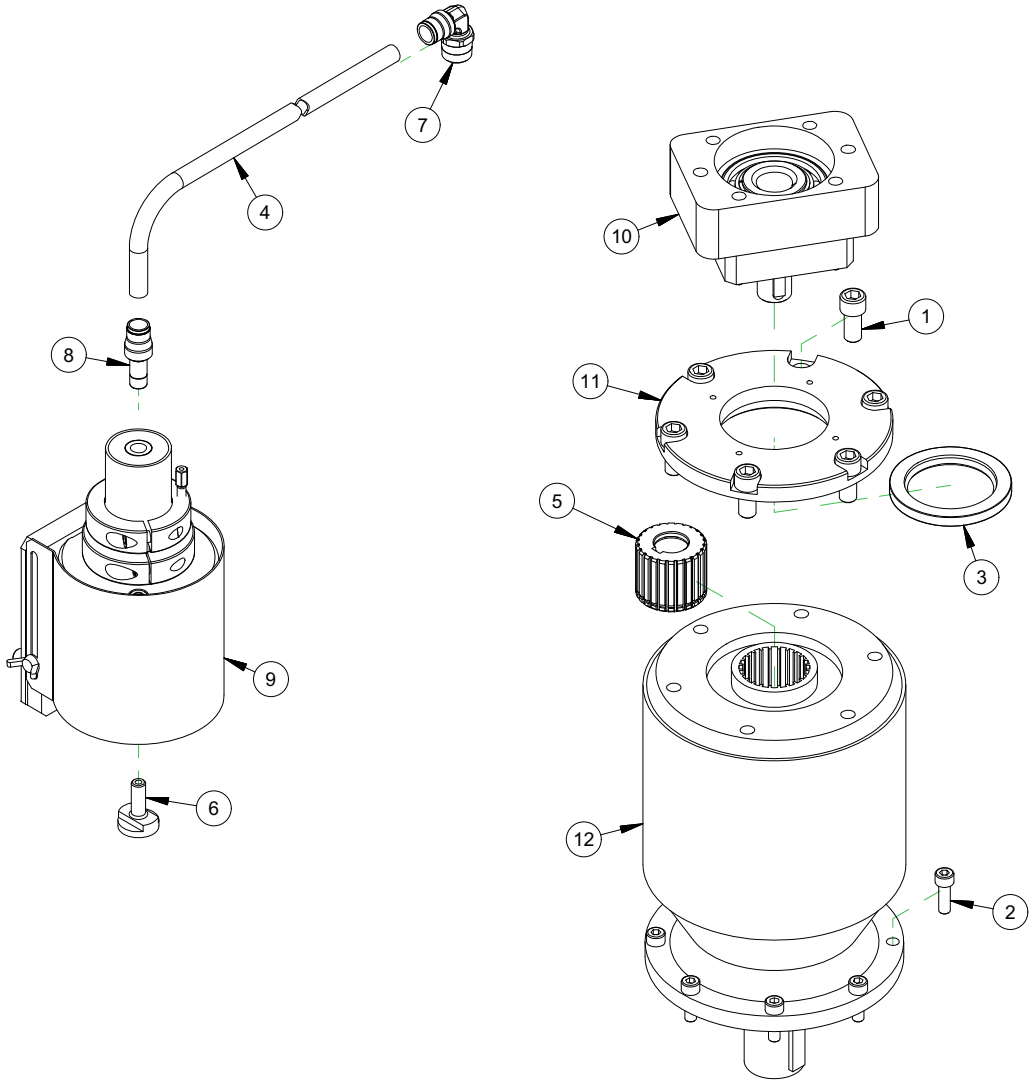

PARTS LIST			
ITEM	QTY	PART No.	DESCRIPTION
1	6	42094	SCREW M12 X 1.75 X 25mm SHCS
2	8	42494	SCREW M8 X 1.25 X 25mm SHCS
3	1	44964	SEAL OIL 60 x 85 x 8 DOUBLE LIP
4	130	48281	TUBING PARFLEX 1/2 OD X 3/8 ID POLYURETHANE BLACK X 130"
5	1	51928	SPLINE COUPLING BREVINI
6	1	62624	ARBOR GRINDING WHEEL CBN 10MM SHANK M8 THREAD
7	1	62681	FTG ELBOW 1/2 NPTM x 1/2 O.D. PRESTOLOK TUBING
8	1	62682	FTG ADAPTER 12MM TUBE X 1/2 PRESTOLOK TUBING
9	1	63063	ASSY GRINDING ATTACHMENT
10	1	63072	ASSY TORQUE LIMITER 24 MM OUTPUT
11	1	63714	FLANGE ADAPTER BREVINI UNIVERSAL TO NEMA 42
12	1	63731	REDUCER 162.8:1 PLANETARY

FIGURA A-17. RECTIFICADORA PARA SP CM6200 CON REDUCTOR DE ENGRANAJES (N/P 63240)

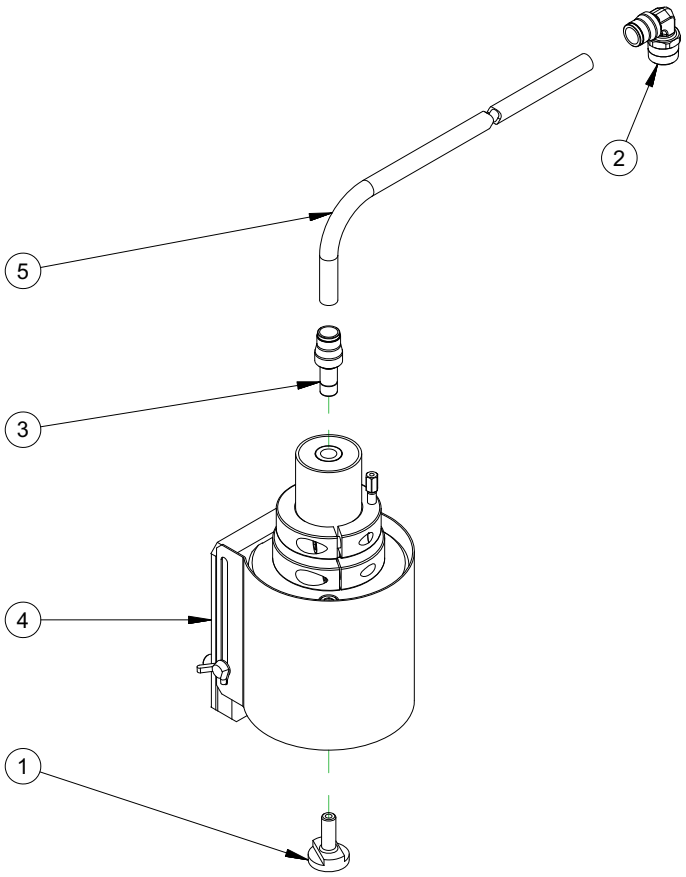

PARTS LIST			
ITEM	QTY	P/N:	DESCRIPTION
1	1	62624	ARBOR GRINDING WHEEL CBN 10MM SHANK M8 THREAD
2	1	62681	FTG ELBOW 1/2 NPTM x 1/2 O.D. PRESTOLOK TUBING
3	1	62682	FTG ADAPTER 12MM TUBE X 1/2 PRESTOLOK TUBING
4	1	63063	ASSY GRINDING ATTACHMENT
5	130IN	79025	TUBING PARFLEX 1/2 OD X .328 ID POLYURETHANE BLACK

FIGURA A-18. RECTIFICADORA PARA SP NEUMÁTICA (N/P 62537)

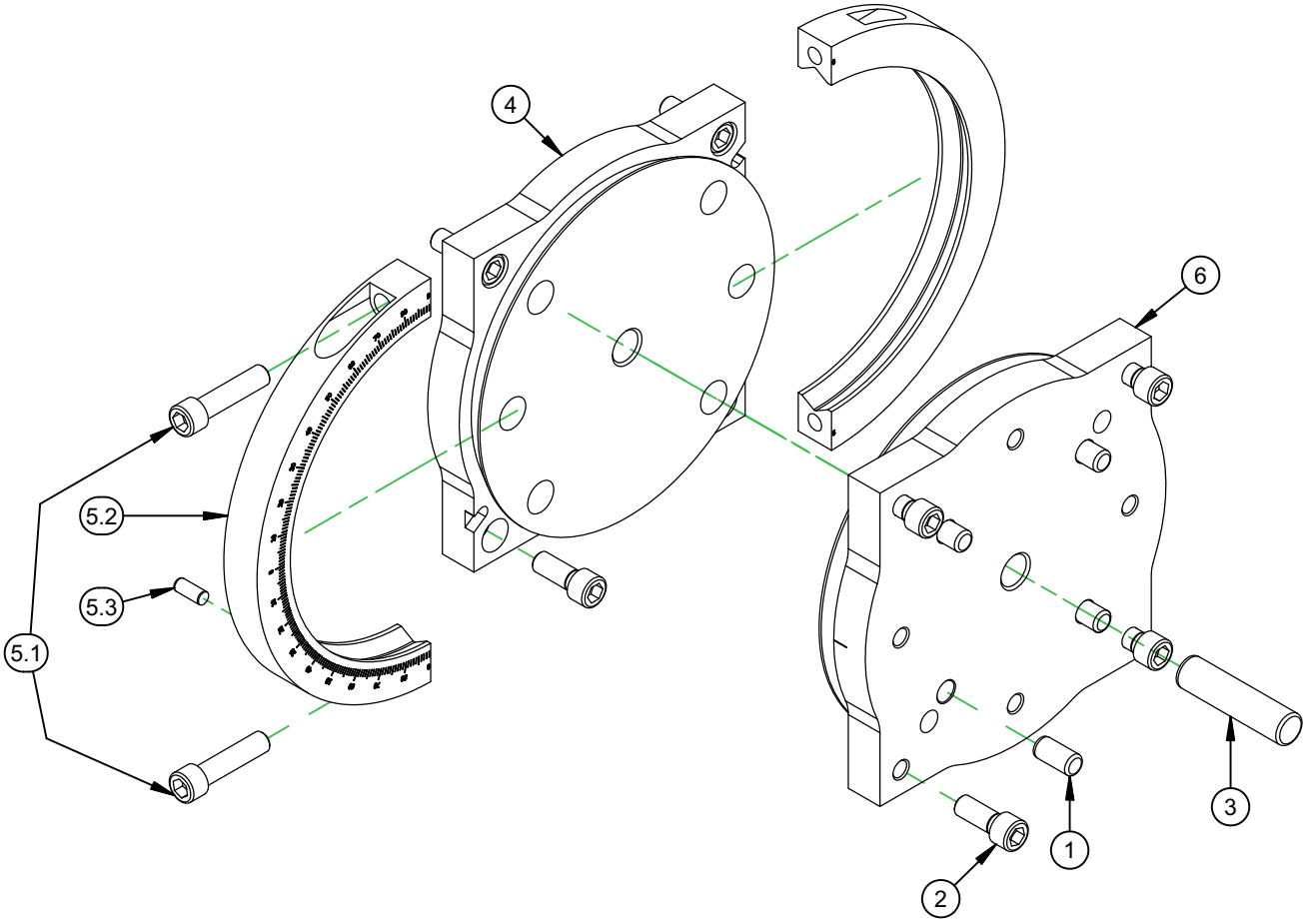

PARTS LIST			
ITEM	QTY	P/N:	DESCRIPTION
1	4	20398	PIN DOWEL 1/2 DIA X 1
2	8	40697	SCREW M12 X 1.75 X 30mm SHCS
3	1	46981	PIN DOWEL 3/4 DIA X 3
4	1	53624	PLATE SWIVEL MILLING HEAD RAM SIDE
5.1	2	64281	SCREW M12 X 1.75 X 50MM SHCS
5.2	1	74224	RING CLAMP SWIVEL PLATE MILLING HEAD METRIC
5.3	1	16540	PIN DOWEL 5/16 DIA X 3/4
6	1	74250	PLATE SWIVEL MILLING HEAD QUILL SIDE METRIC

FIGURA A-19. CONJUNTO DE CABEZAL DE FRESADO GIRATORIO DE PLACA (N/P 63250)

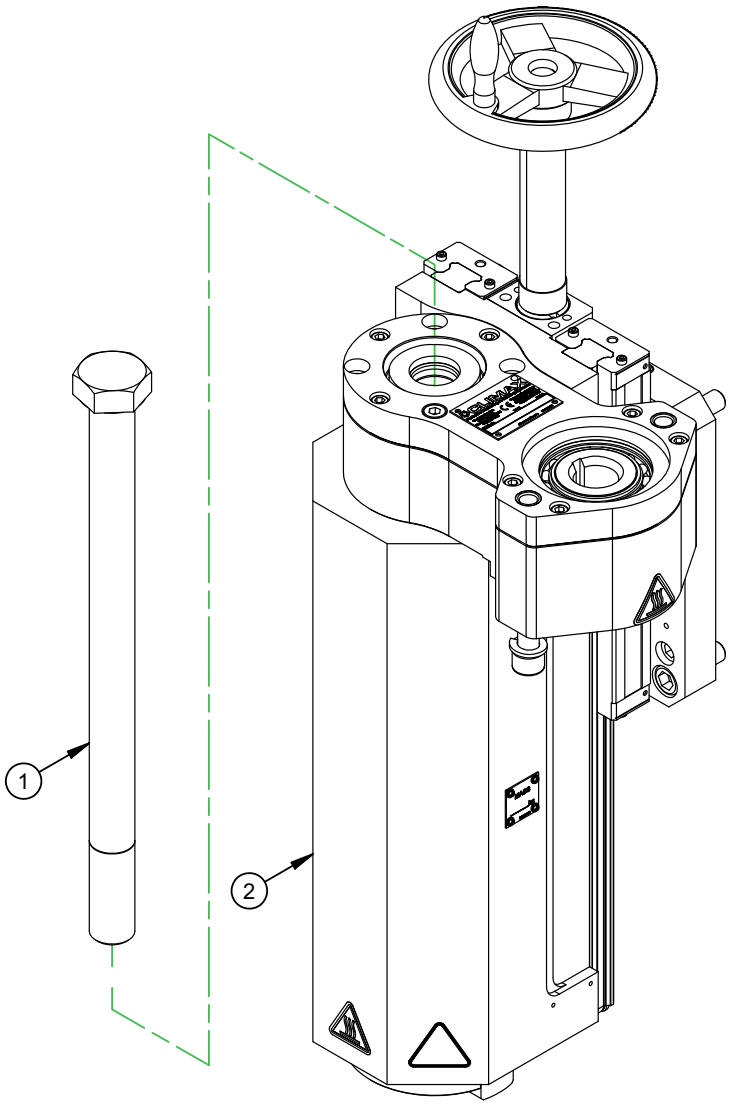

PARTS LIST			
ITEM	QTY	P/N:	DESCRIPTION
1	1	62330	DRAWBOLT 1"-8 X 14.5 (INCH NMTB)
		62331	DRAWBOLT M24X3 X 14.5 (METRIC NMTB)
		62845	DRAWBOLT 1"-8 X 15.5 (INCH V-FLANGE)
		62846	DRAWBOLT M24X3 X 15.5 (METRIC V-FLANGE)
2	1	72277	MILLING HEAD 2-29/32 BRG 8 STROKE #50 TAPER

COMPLETE ASSY (MILLING HEAD W/DRAWBOLT)	
P/N	CONFIGURATION
62282	MILLING HEAD 8 STROKE #50 TAPER INCH NMTB
62734	MILLING HEAD 8 STROKE #50 TAPER INCH V-FLANGE
62644	MILLING HEAD 8 STROKE #50 TAPER METRIC NMTB
62735	MILLING HEAD 8 STROKE #50 TAPER METRIC V-FLANGE

FIGURA A-20. CONJUNTO DE CABEZAL DE FRESADO Y PERNO DE TRACCIÓN (N/P 73354)

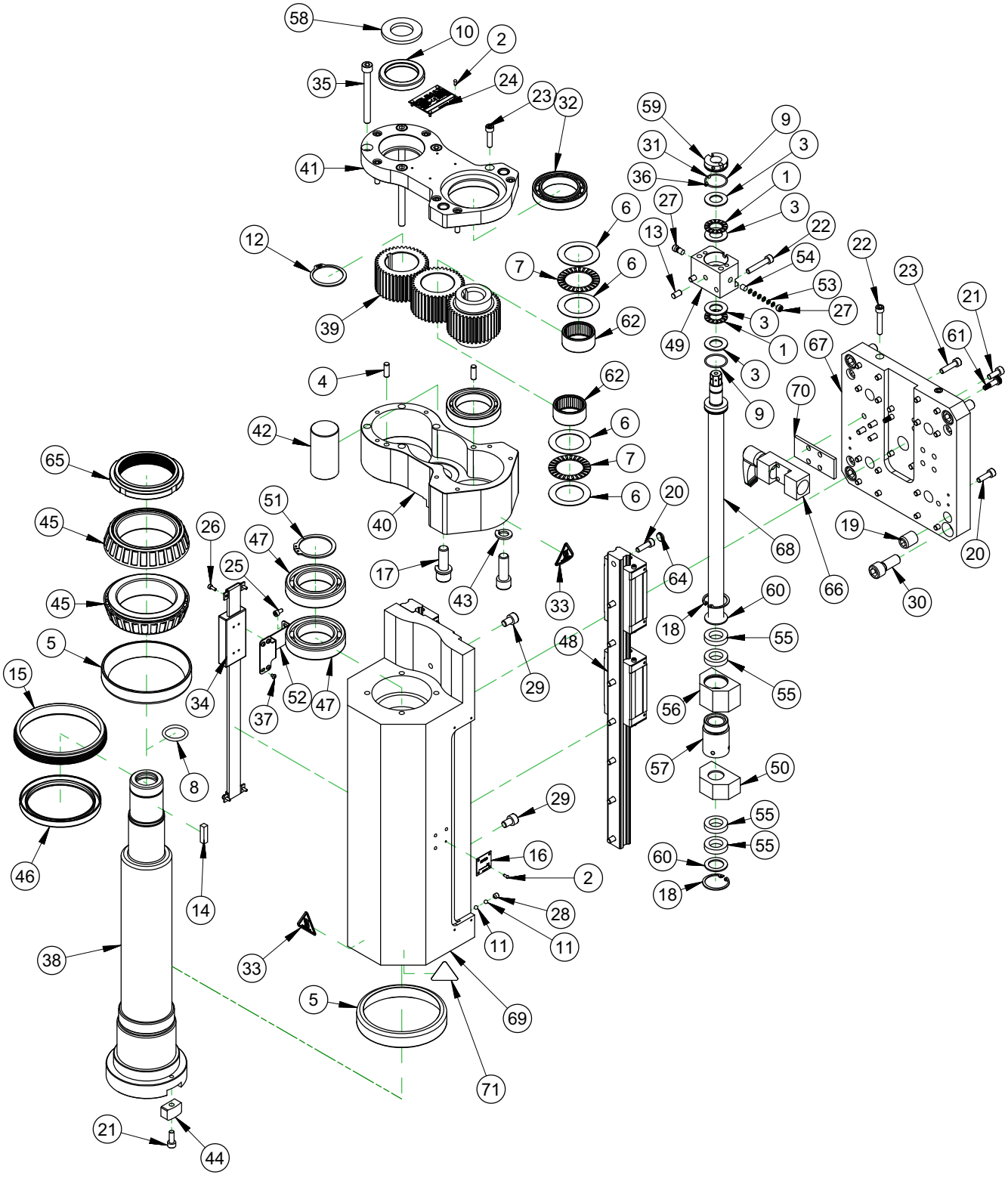

FIGURA A-21. CABEZAL DE FRESADO 2-29/32 BRG 8 TIEMPOS #50 CONICIDAD (N/P 72277)

PARTS LIST			
ITEM	QTY	P/N:	DESCRIPTION
1	2	10538	BRG THRUST .625 ID X 1.125 OD X .0781
2	8	10588	SCREW DRIVE #2 x 1/4 HOLE SIZE .089
3	4	11165	WASHER THRUST .625 ID X 1.125 OD X .060
4	2	11729	PIN DOWEL 1/4 DIA X 3/4
5	2	11821	BRG CUP 4.4375 OD X .750 WIDE
6	4	15326	WASHER THRUST 1.375 ID X 2.062 OD X .030
7	2	15327	BRG THRUST 1-375 ID X 2.062 OD X .0781
8	1	15509	RING O 1/8 X 1 ID X 1-1/4 OD
9	2	15731	RING O 1/16 X 1 ID X 1-1/8 OD
10	1	15768	SEAL 1.625 ID X 2.250 OD X .313
11	4	16594	BALL NYLON 3/16 DIA
12	1	19505	RING SNAP 1-5/8 OD .062 WIDE
13	1	20166	PIN DOWEL 1/4 DIA X 1/2
14	1	20273	KEY 1/4 SQ X 1.00 SQ BOTH ENDS
15	1	28219	NUT MAIN BRG PRELOAD
16	1	29152	PLATE MASS CE
17	2	30207	SCREW M12 X 1.75 X 35mm SHCS
18	2	33777	RING SNAP 1-3/16 ID (30MM)
19	4	34643	SCREW M16 X 1.5 X 20mm SSSFP
20	32	35009	SCREW M6 X 1.0 X 20 SHCS
21	6	35014	SCREW M6 X 1.0 X 16mm SHCS
22	4	35504	SCREW M6 X 1.0 X 35mm SHCS
23	11	35652	SCREW M6 X 1.0 X 25 SHCS
24	1	35828	PLATE SERIAL YEAR MODEL CE 1.5 X 2.0
25	2	35910	SCREW M4 X 0.7 X 8MM SHCS
26	4	35994	SCREW M3 X 0.5 X 8mm SHCS
27	2	36087	SCREW M8 X 1.25 X 6MM SSSFP
28	2	36150	SCREW M6 X 1.0 X 6mm SSSCP
29	2	36545	SCREW M8 X 1.25 X 12mm
30	4	40697	SCREW M12 X 1.75 X 30mm SHCS
31	2	43489	BALL NYLON 1/8 DIA
32	2	46352	BRG BALL 1.7717 ID X 2.6772 OD X .4724 W/ 2 SEALS
33	2	46902	LABEL WARNING HOT SURFACE GRAPHIC 2.25 TRI
34	1	51859	SCALE DIGITAL 8 INCH VERTICAL MOUNT
35	4	52936	SCREW M8 X 1.25 X 80MM SHCS

FIGURA A-22. LISTA DE PIEZAS DEL CONJUNTO DE CABEZALES DE FRESADO 1 (N/P 72277)

PARTS LIST			
ITEM	QTY	P/N:	DESCRIPTION
36	2	53365	SCREW M4 X 0.7 X 4 mm SSSFP
37	4	54024	SCREW M3 X 0.5 X 4MM BHSCS
38	1	60462	SPINDLE BLOCK 2.75 BRG 8 STROKE #50 TAPER
39	1	60467	GEAR SET 40T 16DP 2.5PD THREE GEARS BLOCK SPINDLE 2.75 BRG
40	1	60468	HOUSING GEARBOX BLOCK SPINDLE 2.75 BRG
41	1	60469	COVER GEARBOX BLOCK SPINDLE 2.75 BRG
42	1	60470	SHAFT GEAR BLOCK SPINDLE 2.75 BRG
43	2	60702	WASHER SPLIT LOCK M12
44	2	60704	LUG DRIVE #50 TAPER BLOCK SPINDLE
45	2	60705	BRG CONE 2.75 ID X 1.00 WIDE
46	1	60706	SEAL 3.25 ID X 4.000 OD X .375
47	2	60793	BRG BALL 1.7717 ID X 2.9528 OD X .6299
48	2	62255	SLIDE RAIL THK SHS25 442MM LG PRELOADED METAL SCRAPERS 2 BLOCKS
49	1	62281	BEARING BLOCK BALLSCREW 20MM
50	1	62321	HOLDER FELT WIPER MILLING HEAD
51	1	62322	RING SNAP 1.771 OD (45MM)
52	1	62324	BRACKET DRO BLOCK SPINDLE 2.75 BRG
53	12	62376	WASHER SPRING BELLEVILLE 1/8 ID X 1/4 OD X .013 THK
54	2	62378	ROD POLYURETHANE 1/4 DIA X 1/4 LENGTH 95 SHORE A
55	4	62379	SEAL FELT 16MM BALL SCREW 1.015 OD MILLING HEAD
56	1	62423	MOUNT BALL NUT MILLING HEAD
57	1	62426	BALL SCREW NUT 20MM X 5MM LEAD 33 MM OD EICHENBERGER ROUND
58	1	62696	WASHER 1 FLTW ASTM F436
59	1	62898	BRG RETAINING NUT 5/8-18 O-RING SEAL SETSCREW LOCK
60	2	62903	WASHER SHIM .75 ID 1.125 OD .062 THICK STEEL
61	2	62909	SCREW 6MM DIA X 12MM X M5 X 0.8 SHLDCS
62	2	63437	BRG NEEDLE 1-3/8 ID X 1-5/8 OD X .750 OPEN
63	1	63927	HANDWHEEL ASSY Z-AXIS (NOT SHOWN)
64	16	68501	CAP RAIL 25MM METAL THK SHS
65	1	68623	NUT LOCKING MODIFIED 2.751-18 FLEXIBLE INSERT LOCKING
66	1	72262	ZIMMER BRAKE 25mm RAIL
67	1	72279	PLATE MOUNTING BLOCK SPINDLE 2.75 BRG
68	1	72283	BALL SCREW MILLING HEAD 2.75 BRG 8" STROKE
69	1	72652	HOUSING SPINDLE 2.9062 BRG 8 STROKE
70	1	72869	ADAPTER BRAKE 25mm RAIL 4mm THICK
71	1	80510	LABEL WARNING CUTTING OF FINGERS/ROTATING BLADE

FIGURA A-23. LISTA DE PIEZAS DEL CONJUNTO DE CABEZALES DE FRESADO 2 (N/P72277)

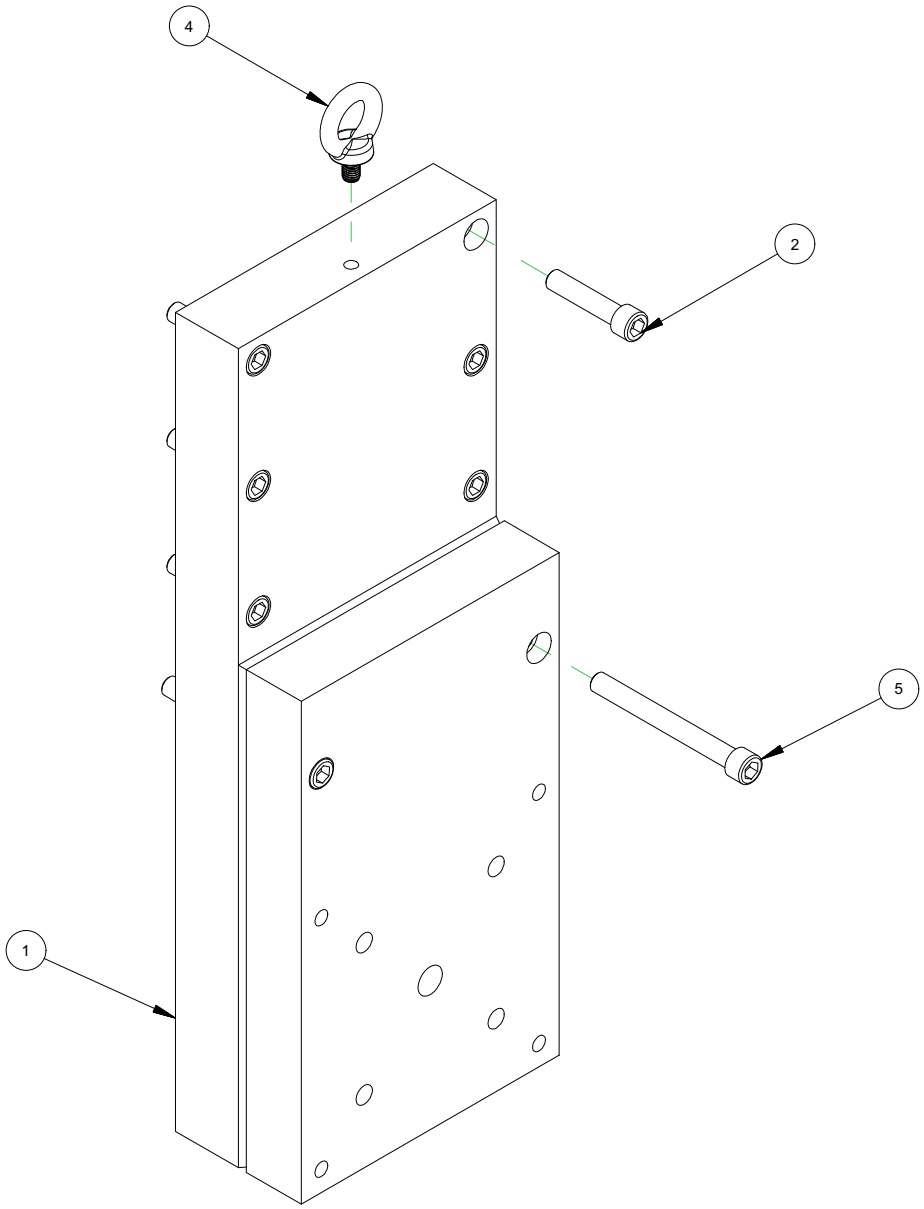

5	2	61164	SCREW M12 X 1.75 X 110 MM SHCS
4	1	59625	BOLT EYE M10 X 1.5 X 17MM LG
2	6	46078	SCREW M12 X 1.75 X 55 SHCS
1	1	65839	EXTENSION MILLING HEAD
ITEM	QTY	PART No.	DESCRIPTION
PARTS LIST			

FIGURA A-24. CONJUNTO DE EXTENSIÓN DEL CABEZAL DE FRESADO (N/P 65840)

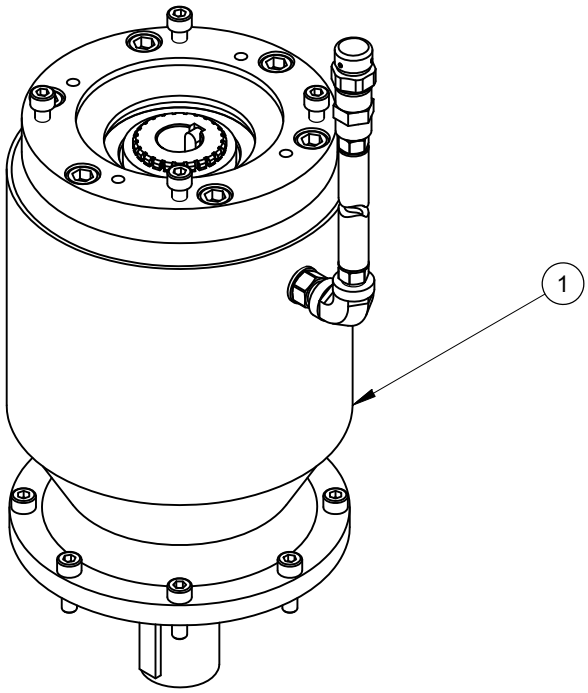

PARTS LIST			
ITEM	QTY	P/N:	DESCRIPTION
1	1	62032	ASSY SERVO DRIVE GEARBOX CM6200

FIGURA A-25. CONJUNTO DE SERVOACCIONAMIENTO (N/P 83156)

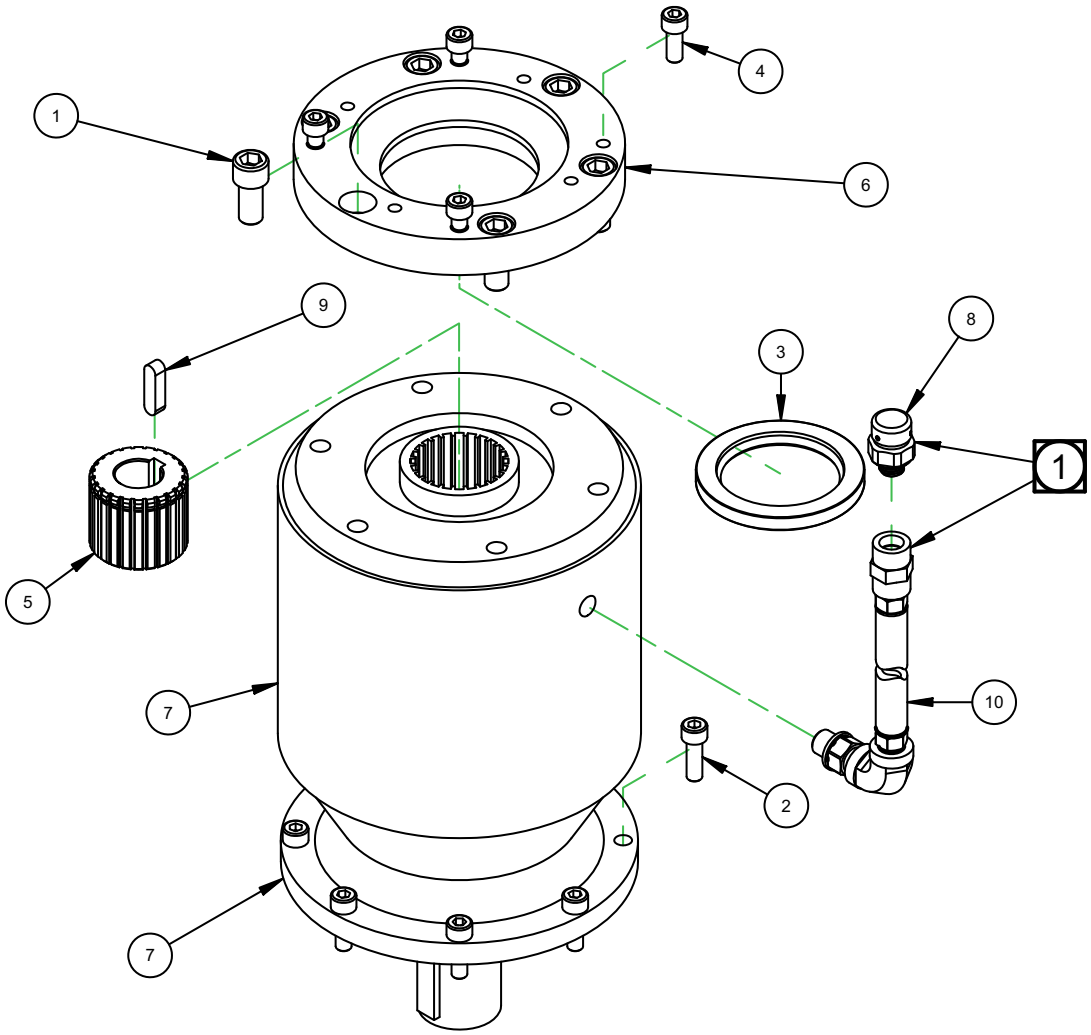

NOTE:

1 REMOVE BREATHER SUPPLIED WITH GEARBOX, INSTALL VENT LINE ASSY 69351, AND ASSEMBLE TO END FITTING

PARTS LIST			
ITEM	QTY	P/N:	DESCRIPTION
1	6	42094	SCREW M12 X 1.75 X 25mm SHCS
2	8	42494	SCREW M8 X 1.25 X 25mm SHCS
3	1	44964	SEAL OIL 60 x 85 x 8 DOUBLE LIP
4	4	50458	SCREW M8 X 1.25 X 20mm SHCS
5	1	51928	SPLINE COUPLING BREVINI
6	1	51930	FLANGE ADAPTER 110mm PILOT SPECIAL DRILLING
7	1	63731	REDUCER 162.8:1 PLANETARY
8	1	-	FACTORY SUPPLIED BREATHER
9	1	68823	KEY 8mm X 7mm X 30mm RADIUS BOTH ENDS
10	1	69351	ASSY GEARBOX VENT LINE

FIGURA A-26. CONJUNTO DE SERVOACCIONAMIENTO (N/P 62032)

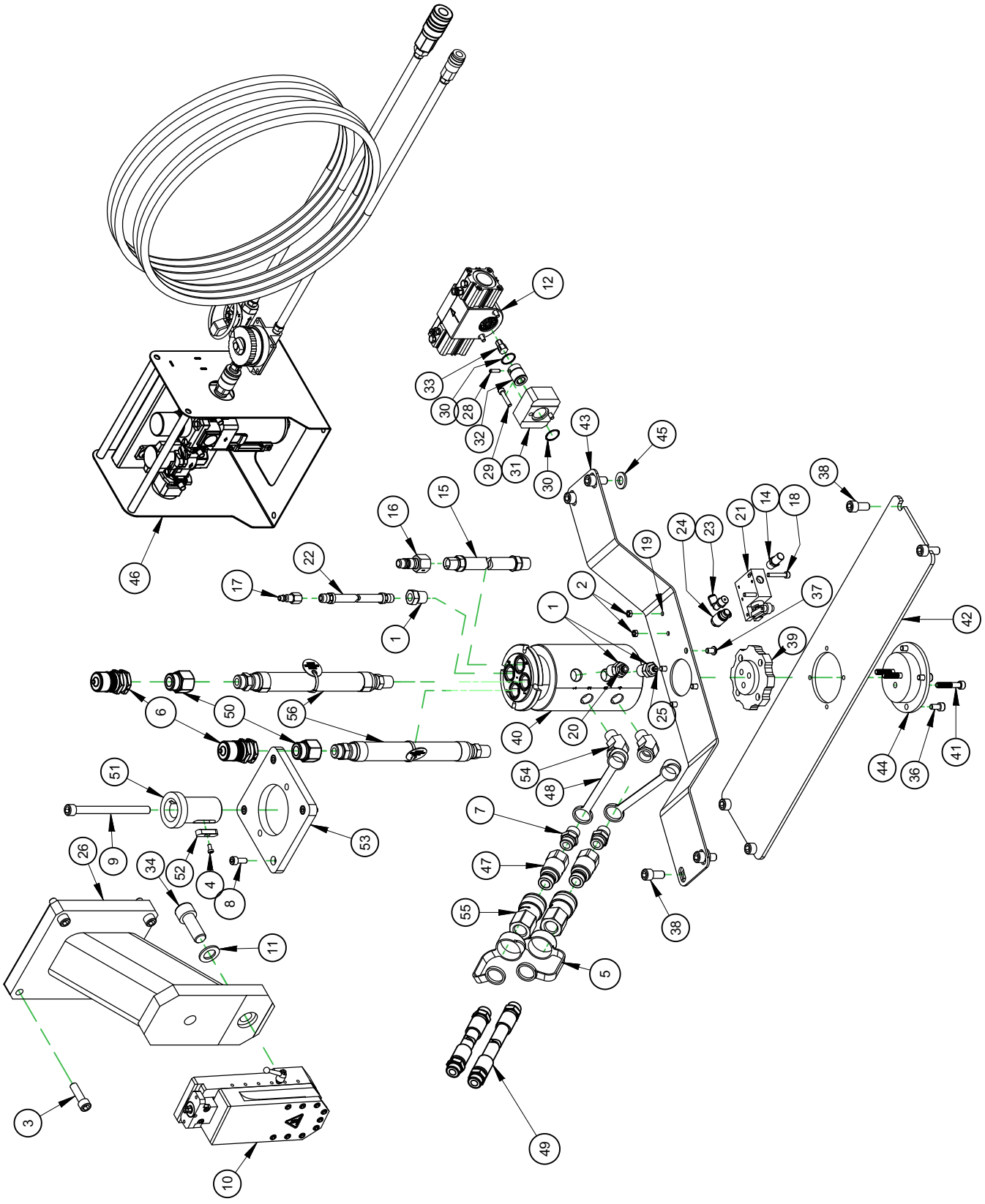

FIGURA A-27. CONJUNTO DE PUNTO ÚNICO (N/P 83100)

PARTS LIST			
ITEM	QTY	P/N:	DESCRIPTION
1	3	12920	FTG REDUCER BUSHING 1/2 NPTM X 1/4 NPTF STEEL
2	2	20772	NUT M6 X 1.0 STDN ZINC PLATED
3	4	35215	SCREW M12 X 1.75 X 40mm SHCS
4	1	35916	SCREW M5 X 0.8 X 10MM SHCS
5	2	39241	DUST CAP 1/2 COUPLER 1SO 16028
6	2	40612	FTG QD NIPPLE 3/4B X SAE-12F
7	2	46944	FTG ADAPTER 1/2 NPTF MALE X 7/8-14 W/ O-RING
8	4	50458	SCREW M8 X 1.25 X 20mm SHCS
9	1	50907	SCREW M12 X 1.75 X 150mm SHCS
10	1	57781	TOOL HEAD ASSY FF LINE
11	1	57888	WASHER FIXTURING 21MM ID X 35MM OD X 3MM CASE HARDENED
12	1	58671	FEED BOX PNEUMATIC REMOTE FEED ADJUST
13	1	59244	PLUMBING PNEUMATIC FEED ASSY
14	1	13641	FTG MUFFLER 1/4 NPTM
15	1	15625	HOSE ASSY 801 1/2 X 1/2 NPTMS ENDS X 12
16	1	24851	FTG QUICK COUPLER 1/2B 1/2 NPTF MALE AIR
17	1	28493	QUICK COUPLER 1/4B MALE 1/4 NPTF
18	2	35504	SCREW M6 X 1.0 X 35mm SHCS
19	2	35891	WASHER M6 FLTW DIN 125
20	1	51263	FTG ADAPTER 1/4 NPTM X 1/4 TUBE F PRESTOLOCK NICKEL PLATED
21	1	59318	VALVE 2-POSITION 3-WAY NORMALLY OPEN
22	1	59341	HOSE ASSY 801 1/4 X 1/4 NPTM ENDS X 12
23	1	59342	FTG ELBOW 1/4 NPTMS X 1/4 TUBE F PRESTOLOCK NICKEL PLATED
24	1	60669	VALVE 1/4 NPTM X 1/4 TUBE F PRESTOLOCK FLOW CONTROL RIGHT ANGLE METERED AT 5 SCFM
25	1	63083	FTG ADAPTER 1/8 TUBE F PRESTOLOCK X 1/4 NPTM STRAIGHT
26	1	62984	ADAPTER SINGLE POINT TOOL HEAD TO MILLING ARM
27	1	62994	ASSY ADAPTER FEEDBOX CM6200
28	1	10850	PIN ROLL 3/16 DIA X 3/4
29	2	35505	SCREW M6 X 1.0 X 30 SHCS
30	2	39074	RING SNAP 7/8 OD SPIRAL MED DUTY
31	1	62985	PLATE FEEDBOX ADAPTER CM6200
32	1	62986	SHAFT FEEDBOX ADAPTER INNER CM6200
33	1	62988	SHAFT FEEDBOX ADAPTER OUTER CM6200
34	1	63018	SCREW M20 X 1.5 X 50MM SHCS
35	1	63121	ASSY ROTARY UNION CM6200
36	4	13787	SCREW M8 X 1.25 X 16mm
37	4	21769	5/16-18 X 1/2 BHSCS
38	8	42094	SCREW M12 X 1.75 X 25mm SHCS
39	1	58039	CAM FEED
40	1	58751	UNION ROTARY HYDRAULIC 4 CHANNEL 1/2 NPTF PORTS MOD
41	3	59349	SCREW M8 X 1.25 X 45MM SHCS
42	1	62891	MOUNT ROTARY UNION CM6200
43	1	62893	RESTRAINT TORQUE ROTARY UNION CM6200
44	1	62894	SPACER ROTARY UNION CM6200
45	4	62978	WASHER M12 FLTW 27MM OD 3.1 MM THICK
46	1	63156	AIR CONTROL ASSY FOR PNEUMATIC FEED 50 FT
47	2	63427	FTG QD NIPPLE 1/2B ISO 16028 STYLE X SAE-10F
48	2	63428	DUST CAP QD NIPPLE 1/2B ISO 16028 STYLE RUBBER
49	2	63675	HOSE ASSY 451 1/2 X SAE-10M X 36 STRAIGHT FITTINGS CE
50	2	63682	FTG ADAPTER SAE-12M X SAE-10F
51	1	63774	ADAPTER SINGLE POINT DRIVE SHAFT
52	1	63782	KEY 8MM X 12MM X 40MM RADIUS BOTH ENDS WITH CB HOLE
53	1	63784	PLATE ADAPTER HYD MOTOR TO DRIVE ASSY
54	2	64901	FTG ELBOW 1/2 NPTM X 1/2 NPTF ST 45 DEG
55	2	69486	FTG QD COUPLER 1/2B ISO 16028 X SAE-10F
56	2	83120	HOSE ASSY 1/2" 451TC X SAE-10 TO 1/2 NPTM X 12 INCHES CE

FIGURA A-28. LISTA DE PIEZAS DEL CONJUNTO DE UN SOLO PUNTO (N/P 83100)

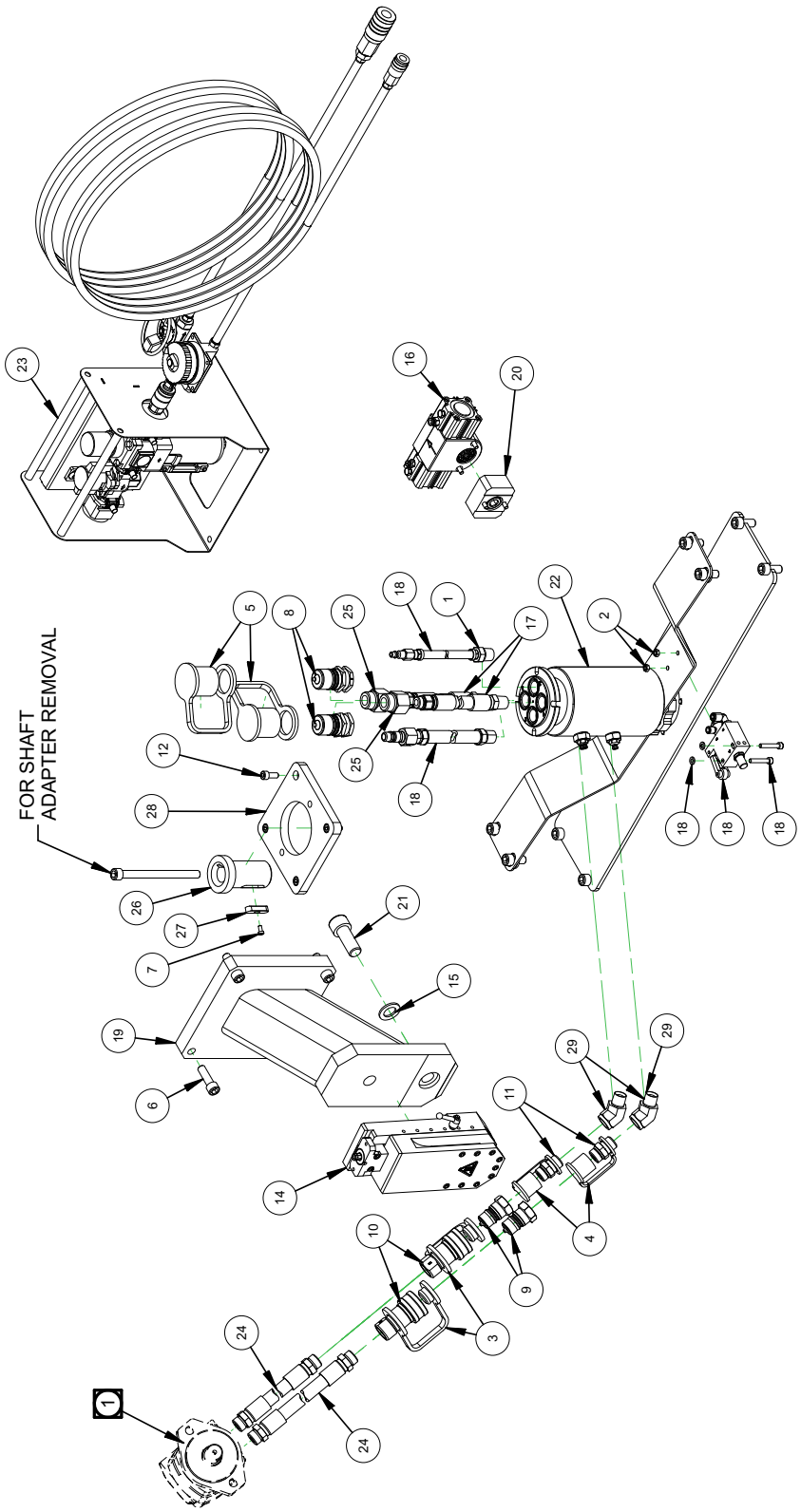

FIGURA A-29. CONJUNTO DE UN SOLO PUNTO (N/P 62037)

PARTS LIST			
ITEM	QTY	PART No.	DESCRIPTION
1	3	12920	FTG REDUCER BUSHING 1/2 NPTM X 1/4 NPTF STEEL
2	2	20772	NUT M6 X 1.0 STDN ZINC PLATED
3	2	27977	FTG DUST PLUG 1/2 QD COUPLER
4	2	27978	FTG DUST CAP 1/2 MALE QUICK COUPLING
5	2	29561	FTG DUST CUP 60 SERIES 3/4 MALE QUICK CONNECT
6	4	35215	SCREW M12 X 1.75 X 40mm SHCS
7	1	35916	SCREW M5 X 0.8 X 10MM SHCS
8	2	40612	FTG QD NIPPLE 3/4B X SAE-12F
9	2	40614	FTG QUICK COUPLER MALE 1/2B X SAE-10F
10	2	40615	FTG QUICK COUPLER FEMALE 60 SERIES 1/2B X SAE-10F
11	2	46944	FTG ADAPTER 1/2 NPTF MALE X 7/8-14 W/ O-RING
12	4	50458	SCREW M8 X 1.25 X 20mm SHCS
13	1	50907	SCREW M12 X 1.75 X 150mm SHCS
14	1	57781	TOOL HEAD ASSY FF LINE
15	1	57888	WASHER FIXTURING 21MM ID X 35MM OD X 3MM CASE HARDENED
16	1	58671	FEED BOX PNEUMATIC REMOTE FEED ADJUST
17	2	59240	HOSE ASSY 451 1/2 X SAE-10M TO 1/2 NPTM X 12 STRAIGHT FITTINGS
18	1	59244	PLUMBING PNEUMATIC FEED ASSY
19	1	62984	ADAPTER SINGLE POINT TOOL HEAD TO MILLING ARM
20	1	62994	ASSY ADAPTER FEEDBOX CM6200
21	1	63018	SCREW M20 X 1.5 X 50MM SHCS
22	1	63121	ASSY ROTARY UNION CM6200
23	1	63156	AIR CONTROL ASSY FOR PNEUMATIC FEED 50 FT
24	2	63675	HOSE ASSY 451 1/2 X SAE-10M X 36 STRAIGHT FITTINGS CE
25	2	63682	FTG ADAPTER SAE-12M X SAE-10F
26	1	63774	ADAPTER SINGLE POINT DRIVE SHAFT
27	1	63782	KEY 8MM X 12MM X 40MM RADIUS BOTH ENDS WITH CB HOLE
28	1	63784	PLATE ADAPTER HYD MOTOR TO DRIVE ASSY
29	2	64901	FTG ELBOW 1/2 NPTM X 1/2 NPTF ST 45 DEG

FIGURA A-30. LISTA DE PIEZAS DEL CONJUNTO DE UN SOLO PUNTO (N/P 62037)

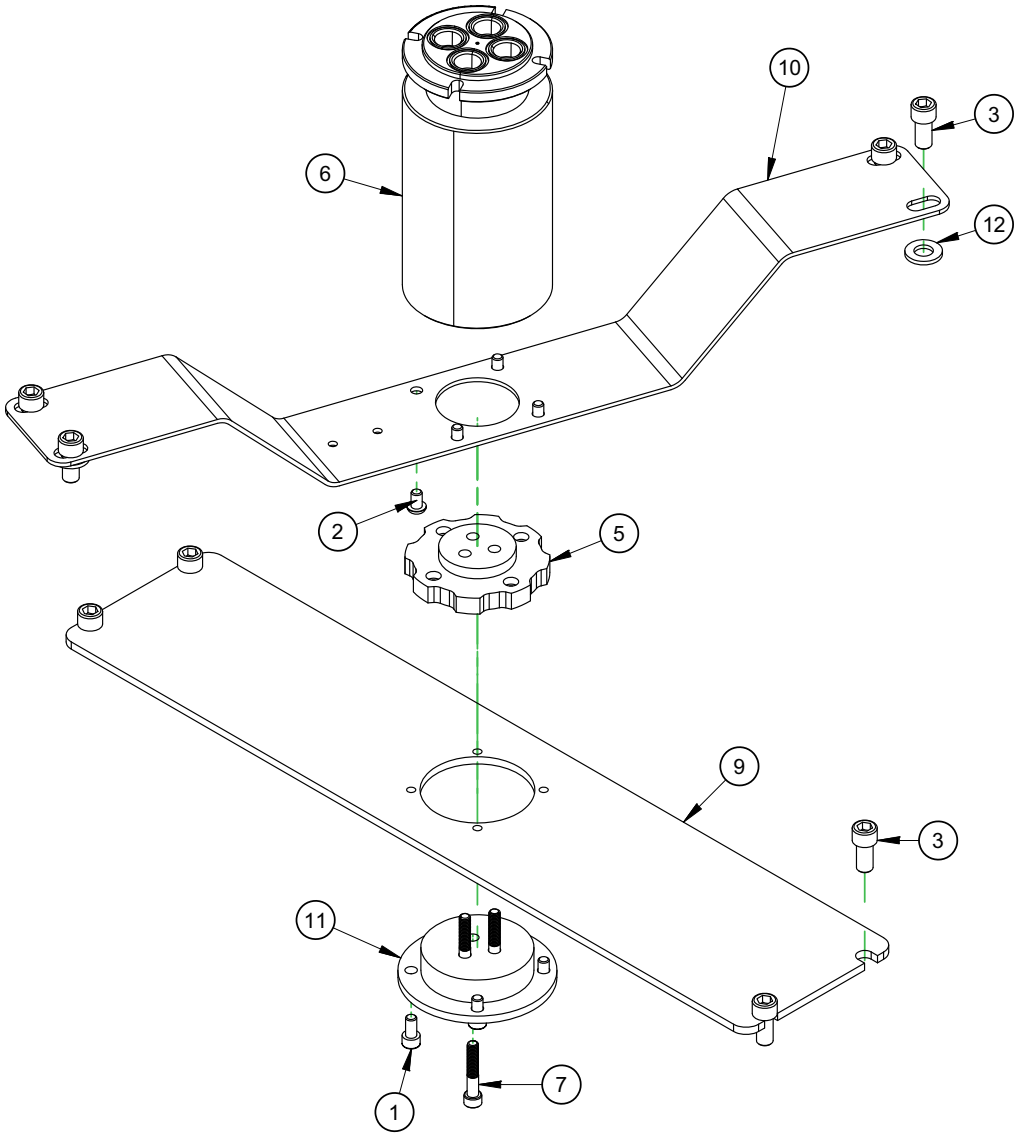

PARTS LIST			
ITEM	QTY	P/N:	DESCRIPTION
1	4	13787	SCREW M8 X 1.25 X 16mm
2	4	21769	5/16-18 X 1/2 BHSCS
3	8	42094	SCREW M12 X 1.75 X 25mm SHCS
4	3	42494	(NOT SHOWN FOR OD CONFIG ONLY) SCREW M8 X 1.25 X 25MM SHCS
5	1	58039	CAM FEED
6	1	58751	UNION ROTARY HYDRAULIC 4 CHANNEL 1/2 NPTF PORTS MOD
7	3	59349	SCREW M8 X 1.25 X 45MM SHCS
8	4	60837	(NOT SHOWN FOR OD CONFIG ONLY) SCREW M8 X 1.25 X 16MM HHCS
9	1	62891	MOUNT ROTARY UNION CM6200
10	1	62893	RESTRAINT TORQUE ROTARY UNION CM6200
11	1	62894	SPACER ROTARY UNION CM6200
12	4	62978	WASHER M12 FLTW 27MM OD 3.1 MM THICK

FIGURA A-31. CONJUNTO DE UNIÓN ROTATIVA (N/P 63121)

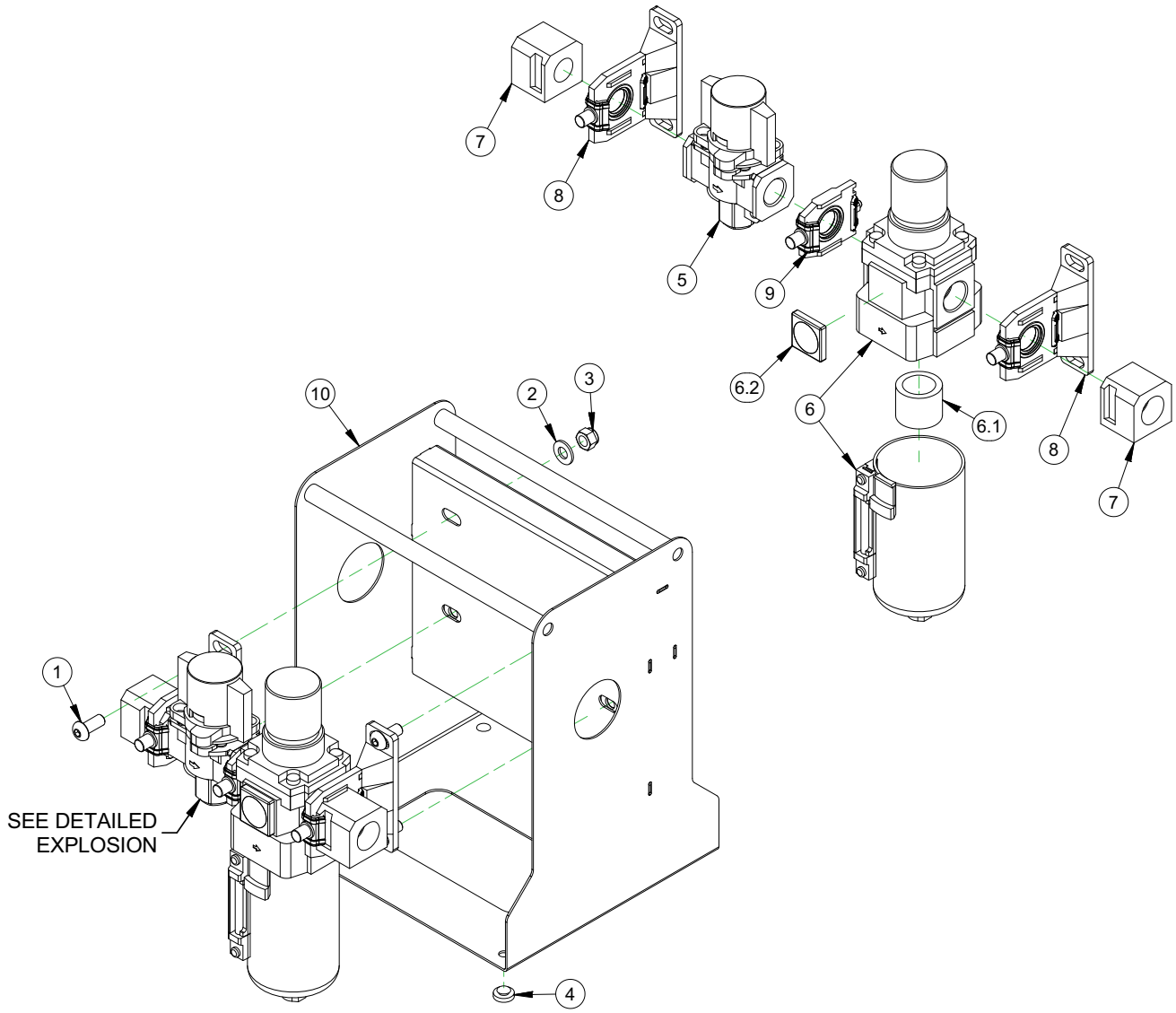

PARTS LIST					
ITEM	QTY	P/N:	DESCRIPTION	MANUFACTURER	MFG P/N
1	4	14771	5/16-18 X 3/4 BHSCS	N/A	N/A
2	4	13489	WASHER 5/16 FLTW SAE	N/A	N/A
3	4	19729	NUT 5/16-18 NYLON INSERT LOCKNUT	N/A	N/A
4	4	83462	RUBBER BUMPER, 9/16 DIA X 1/8 TALL	N/A	N/A
5	1	96732	SP VALVE ISOLATION/SHUTOFF WITH 1/2 INCH PORTS	SMC	VHS40-N04B-S-Z
6	1	96733	SP REGULATOR & FILTER W/ GAGE & SIGHT GLASS 7-125 PSI 1/2 PORTS	SMC	AW40-N04-8Z-B
6.1	1	96735	SP FILTER PNEUMATIC	SMC	AF40P-060S
6.2	1	97635	SP INDICATOR PRESSURE 1 MPA FOR SMC FRL	SMC	GC3-10AS-X2103
7	2	N/A	ADAPTER PIPE 1/2 INCH NPT FOR SMC SIZE 40 FRL	SMC	E400-N04-A
8	2	N/A	SPACER WITH BRACKET FOR SMC SIZE 40 FRL	SMC	Y400T-A
9	1	N/A	SPACER FOR SMC SIZE 40 FRL	SMC	Y400-A
10	1	97739	SHEET METAL FRAME FOR SMC PCU 1/2 INCH PORTS	N/A	N/A

FIGURA A-32. CONJUNTO DE LA UNIDAD DE ACONDICIONAMIENTO NEUMÁTICO (N/P 97742)

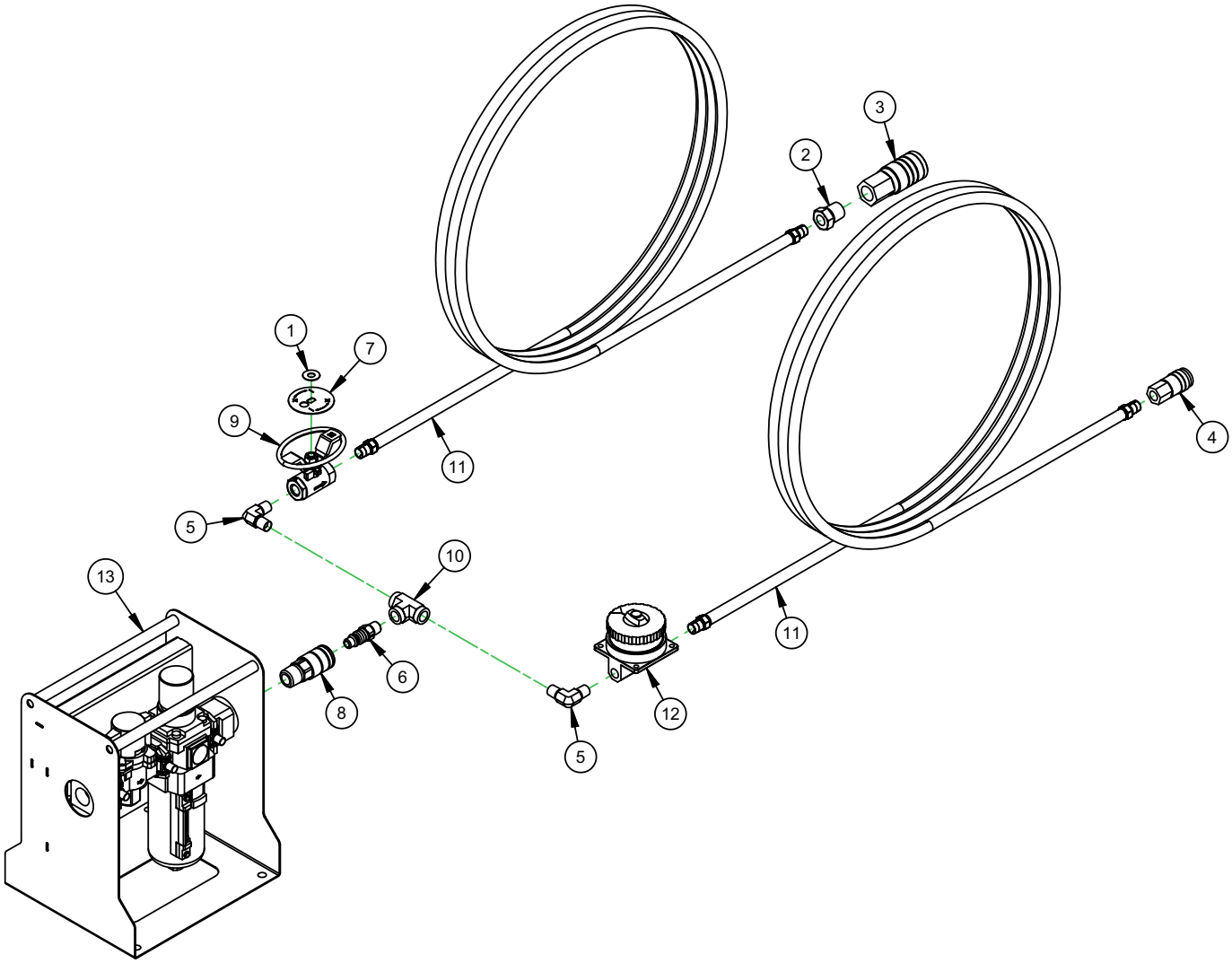

PARTS LIST			
ITEM	QTY	PART No.	DESCRIPTION
1	1	10770	WASHER THRUST .75 OD X .312 ID X .03
2	1	12920	FTG REDUCER BUSHING 1/2 NPTM X 1/4 NPTF STEEL
3	1	13208	FTG QUICK COUPLER 1/2B 1/2NPTF FEMALE AIR
4	1	28494	FTG QUICK COUPLER 1/4B 1/4 NPTF FEMALE AIR
5	2	30502	FTG ELBOW 1/4 NPTM X 1/4 NPTM 90 DEG
6	1	30936	FTG QUICK COUPLER 3/8B 1/4 NPTM MALE AIR
7	1	35772	LABEL DIRECTION OVAL HANDLE BALL VALVE
8	1	55126	FTG QUICK COUPLER 3/8B 1/2 NPTM FEMALE AIR
9	1	59203	VALVE BALL 1/4 NPTF X 1/4 NPTF VENTED OVAL HANDLE
10	1	59695	FTG TEE 1/4 NPTF (3)
11	2	63155	HOSE ASSY 801 1/4 X 1/4 NPTMS ENDS X 600
12	1	71317	REGULATOR PNUE. 2-40 PSI DIAL SET SEMI-PRECISION 1/4 NPTF X 1/4 NPTF
13	1	97742	ASSY PNEUMATIC FILTER & VALVE WITH STAND

FIGURA A-33. CONJUNTO DE CONTROL DE AIRE PARA ALIMENTACIÓN NEUMÁTICA (N/P 63156)

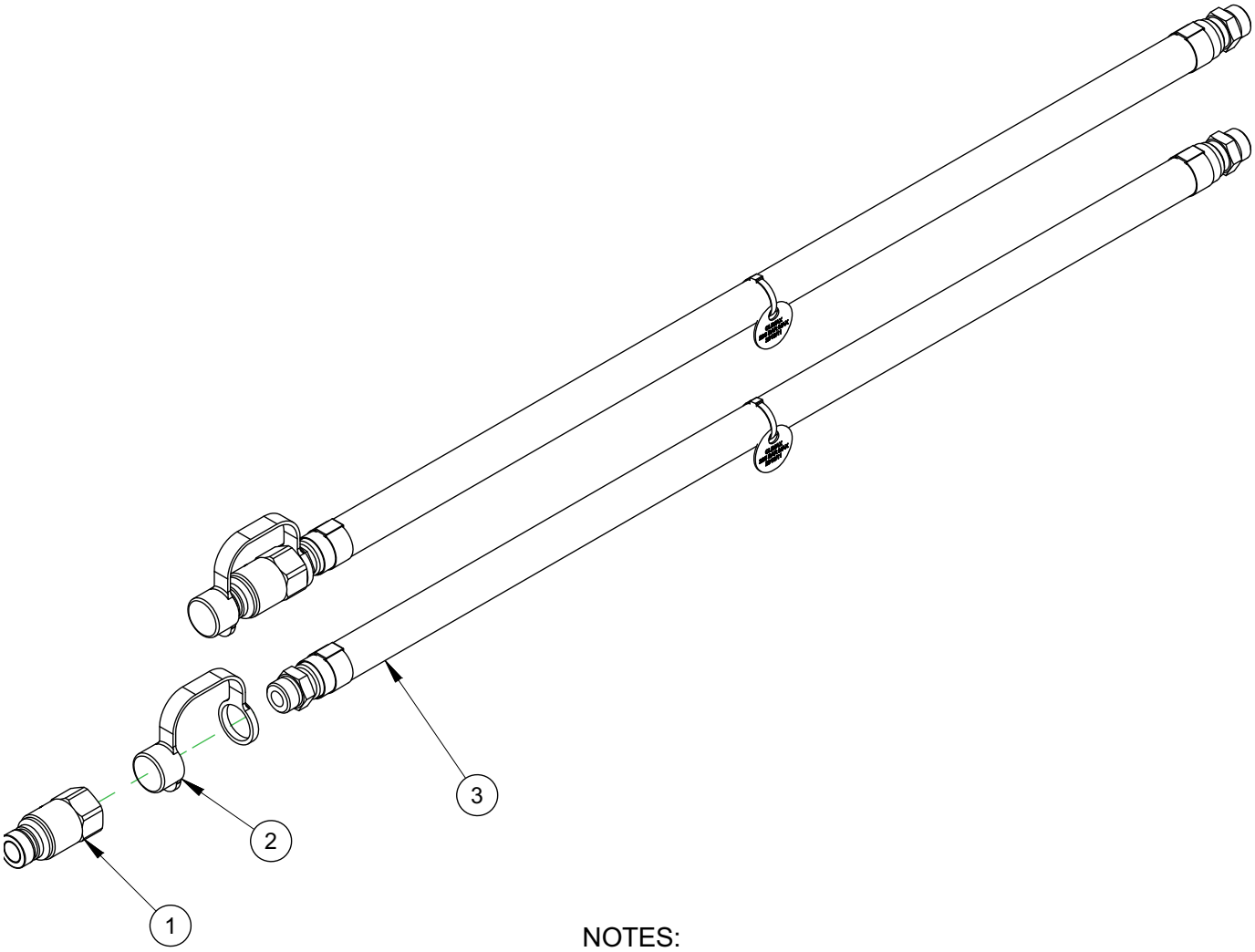

NOTES:

1. HOSES WILL ATTACH TO HYDRAULIC MOTOR.
2. QUICK COUPLERS AND DUST CAPS WILL ATTACH TO HOSES ON ROTARY UNION.

PARTS LIST			
ITEM	QTY	P/N:	DESCRIPTION
1	2	63427	FTG QD NIPPLE 1/2B ISO 16028 STYLE X SAE-10F
2	2	63428	DUST CAP QD NIPPLE 1/2B ISO 16028 STYLE RUBBER
3	2	83181	HOSE ASSY 451 1/2 X SAE-10M X 36 STRAIGHT FITTINGS CE

FIGURA A-34. CONJUNTO DE ACCIONAMIENTO HIDRÁULICO DE PUNTO ÚNICO (N/P 83186)

TABLA A-1. PIEZAS DE REPUESTO

Ctd.	Número de pieza	Descripción
4	62606	ARO DE ELEVACIÓN M24 X 3 X 38MM 70 ID X 130 OD 225 OAL 9250 LBS 4200 KG GIRATORIO
64	58202	TUERCA 16MM DIA X 20MM X M12 X 175 SHLDCS
Torre de manguera/Protección de codificador		
1	62616	MANGUERA DE TORRE CM6200
2	57874	TUERCA M8 X 125 X 60MM SHCS
1	62615	PROTECTOR CODIFICADOR CM6200
Abrazaderas de brazo giratorio		
3	62601	CONJ BRAZO ABRAZADERA CM6200
1	62602	CONJ BRAZO ABRAZADERA SEGURIDAD
8	46222	TORNILLO M16 X 20 X 45MM SHCS
Frenos de arrastre		
16	27172	ARANDELA MUELLE BELLEVILLE 5/8 X 1-1/4 X 040
4	11693	ARANDELA 5/8 FLTW SAE
4	62612	ESPÁRRAGO ROSCADO M16 X 2 X 100MM ROSCA COMPLETA
8	62613	TUERCA M16 X 20 JAMN
2	46232	ABRAZADERA DE FRENO DE BARRA
2	54165	FRENO DE ZAPATA FRESADORA CIRCULAR 16M
Fresado		
2	62255	RIEL DE DESLIZAMIENTO THK SHS25 442MM LG RASCADORES PRECARGADOS DE METAL 2 BLOQUES
1	62426	TUERCA DE HUSILLO DE BOLAS 20MM X 5MM LEAD 33MM OD EICHENBERGER REDONDO
1	62431	CABEZA FRESADORA DE HUSILLO DE BOLAS 275 BRG 8" CARRERA
1	62719	OPERADOR MANUAL DE EJE CON LLAVE DE 1" DE HERRAMIENTA
1	51859	ESCALA DIGITAL DE 8 PULGADAS DE MONTAJE VERTICAL
1	62645	ZÓCALO DE LLAVE 38MM 12 PT 1/2 UNIDAD
1	53459	MOTOR DE MONTAJE HYD 80 CU EN LA SERIE 2000 CON 12" QD MACHO
1	53458	MOTOR DE MONTAJE HYD 96 CU EN LA SERIE 2000 CON 12" QD MACHO
1	46950	MOTOR DE MONTAJE HYD 119 CU EN LA SERIE 2000 CON 12" QD MACHO
1	46375	MOTOR DE MONTAJE HYD 149 CU EN LA SERIE 2000 CON 12" QD MACHO

TABLA A-1. PIEZAS DE REPUESTO

Ctd.	Número de pieza	Descripción
1	46549	MOTOR DE MONTAJE HYD 187 CU EN LA SERIE 2000 CON 12" QD MACHO
1	46550	MOTOR DE MONTAJE HYD 140 CU EN LA SERIE 2000 CON 12" QD MACHO
1	47383	CONJ. FRESADORA FRONTAL 4 DIA N.º 50 CONO C/ INSERTOS
1	47384	CONJ. FRESADORA FRONTAL 5 DIA N.º 50 CONO C/ INSERTOS
1	47385	CONJ. FRESADORA FRONTAL 6 DIA N.º 50 CONO C/ INSERTOS
1	47386	CONJ. FRESADORA FRONTAL 8 DIA N.º 50 CONO C/ INSERTOS
1	56175	CONJ. FRESADORA FRONTAL 10 DIA N.º 50 CONO C/ INSERTOS
1	47229	INSERTO DE CARBURO CUADRADO 528 IC SEMT13T3AGSN-JM
Punto único		
3	12920	BUJE REDUCTOR FTG 1/2 NPTM X 1/4 NPTF ACERO
2	27977	ENCHUFE DE POLVO FTG 1/2 ACOPLAMIENTO RÁPIDO HEMBRA
2	27978	TAPA DE POLVO FTG 1/2 ACOPLAMIENTO RÁPIDO HEMBRA
2	40614	FTG ACOPLADOR RÁPIDO MACHO SERIE 60 1/2B X SAE-10F
2	40615	FTG ACOPLADOR RÁPIDO HEMBRA SERIE 60 1/2B X SAE-10F
2	46944	ADAPTADOR FTG 1/2 NPTF MACHO X SAE-10M
1	29066	HERRAMIENTA BIT HSS 3/4 X 50 IZQUIERDA ACABADO SIMPLE SC
1	29067	HERRAMIENTA BIT HSS 3/4 X 50 DERECHA ACABADO SIMPLE SC
1	46252	HEXÁGONO INTERIOR DE LLAVE 17MM 1/2 ACCIONAMIENTO
1	57794	POMO ENSAMBLADO MODIFICADO
2	59240	CONJUNTO DE MANGUERAS 451 1/2 X SAE-10 A 1/2 NPTM X 12 CONECTO-RES RECTOS
1	60033	INSERTO DE SOPORTE 3/4 SQ MANGO MANO IZQUIERDA W/ 10 INSERTS TRIGONE SEC
1	60034	INSERTO DE SOPORTE 3/4 SQ MANGO MANO DERECHA W/ 10 INSERTS TRIGONE SEC
1	63121	CONJ. JUNTA ROTATIVA CM6200
Sistema de alimentación axial de punto único		
1	58671	CAJA DE ALIMENTACIÓN AJUSTE REMOTO NEUMÁTICO DE LA ALI-MENTACIÓN
130	50985	TUBERÍA 1/4 OD X 040 PUNTO DE PARED 1200 PSI NYLON AZUL
130	59151	TUBERÍA 1/8 OD X 023 PUNTO DE PARED 1000 PSI NYLON AZUL
1	59318	VÁLVULA 2 POSICIONES 3 VÍAS NORMALMENTE ABIERTA
1	58519	AVANCE DEL EJE EXTRAÍBLE DE LA CAJA DE ALIMENTACIÓN

TABLA A-1. PIEZAS DE REPUESTO

Ctd.	Número de pieza	Descripción
2	58446	CILINDRO AIRE 40MM DIA 10MM CARRERA RESORTE DE SIMPLE EFECTO EXT. PULGADA
1	57530	AGUJA BRG 1 ID X 1-5/16 OD X 625 ABIERTA
2	25957	EMBRAGUE DE RODILLOS BRG 1 ID X 1312 OD X 625 (KB)
2	25959	SELLO 1000 ID X 1312 OD X 125 (KB)
2	59156	TUERCA M6 X 10 X 60MM SHCS
Rectificado		
1	62633	MUELA RECTIFICADORA 15 DIA. CBN 130 GRIT. 8MM DIÁMETRO INTERIOR
1	62634	MUELA RECTIFICADORA 225 DIA. CBN 130 GRIT. 8MM DIÁMETRO INTERIOR
1	11132	CODO FTG 3/8 NPTM X 3/8 NPTF STREET 90 GRADOS
1	13208	ACOPLADOR RÁPIDO FTG 1/2B X 1/2 NPTF AIRE HEMBRA
1	14704	BOQUILLA FTG 1/2 NPTM X 1/2 NPTM
1	16615	ACOPLADOR RÁPIDO FTG 1/2B X 3/8 NPTF AIRE MACHO
1	32196	MANGUERA 801 1/2 X 1/2 NPTM X 400
1	36328	VÁLVULA DE BOLA 1/2 NPTF X 1/2 NPTF MANGO OVALADO
1	52734	ADAPTADOR FTG 3/8 BSPP MACHO X 3/8 NPTF
1	57888	ARANDELA 21MM ID X 35MM OD X 3MM ENDURECIDA
1	62624	MUELA RECTIF. DE HUSILLO CBN 10MM VÁSTAGO M8 ROSCA
1	63018	TORNILLO M20 X 15 X 50MM SHCS
Unidad		
1	62702	PIÑÓN DE ENGRANAJE 4DP 18T CM6200
2	63008	BRG BOLA 35433 ID X 45276 OD X 5118
1	63014	ANILLO SNAP 3-1/2 OD X 109 THK
2	63042	ANILLO SNAP 4-1/2 OD X 109 THK
Mandril ID		
8	89718	MANDRIL DE BASE PLANA
4	91317	PINZA DE SUJECIÓN DE PIE ASSY SIN NIVELACIÓN
8	89720	TUBO DE MANDRIL DE PATA 4,5 OD X 2,5 ROSCADO
12	89721	TUBO DE MANDRIL DE PATA 4,5 OD X 5,0 ROSCADO
8	89717	TAPÓN FIN 4,50 DIA 4-4 OD 3 HILO DE PLOMO 2-8 ID
4	57724	SEPARACIÓN DE SOLDADURAS 125 FF8200
8	57851	SEPARACIÓN DE SOLDADURAS 175 FF8200
4	57852	SEPARACIÓN DE SOLDADURAS 275 FF8200

TABLA A-1. PIEZAS DE REPUESTO

Ctd.	Número de pieza	Descripción
96	58203	TORNILLO M20 X 25 X 40MM SHCS
4	61362	PLACA DE SOLDADURA DE SEGURIDAD DEL SISTEMA DE RETENCIÓN
Mandril OD		
32	56192	TORNILLO M20 X 25 X 70MM SHCS
8	57724	SEPARACIÓN DE SOLDADURAS 125 FF8200
8	57851	SEPARACIÓN DE SOLDADURAS 175 FF8200
8	57852	SEPARACIÓN DE SOLDADURAS 275 FF8200
8	60755	SOPORTE DE MONTAJE DE 5 PULGADAS FF8200
96	58203	TORNILLO M20 X 25 X 40MM SHCS
16	59827	TORNILLO M8 X 125 X 16MM BHCS
8	60751	MONTAJE OD CENTRADO PLACA FF8200
8	60752	ARANDELA DE LA PLACA MONTAJE OD FF8200
8	60753	MONTAJE OD SOPORTE ESPÁRRAGO SOLD. FF8200
40	60756	TORNILLO M24 X 30 X 60MM SSSFP
8	60757	TUERCA M24 X 30 CON BRIDA
32	60760	TORNILLO M20 X 25 160MM SHCS
8	61433	ESCUDO MONTAJE OD FF8200
8	62687	SOPORTE VERTICAL DE PATA MONTAJE OD CM6200
Montaje frontal		
32	12339	ARANDELA 3/4 FLTW
16	57348	TORNILLO M16 X 20 X 60MM SSSFP
32	58203	TORNILLO M20 X 25 X 40MM SHCS
4	62887	SOPORTE MONTAJE FRONTAL CM6200
Servo / HPU		
1	55609	CAJA DE EMPALMES CONJ. Y SERVO MOTOR CM62000 15 KW
1	55608	ARNÉS DE CABLES CONJ. CM6000 15 KW 50 FT
1	53433	EXTENSIÓN CABLE 19 PATILLAS 19 CONDUCTOR CONECTORES MOLDEA-DOS 16 METROS (50 pies) CAMISA TPE
1	56204	HPU 25HP 415V SERVO DE PANTALLA TÁCTIL CON CONTROL ANGULAR CE
Versión 400V		
1	51558	MOTOR SERVO 15 KW 2000 RPM 400 V MITSUBISHI
1	56000	SERVOAMPLIFICADOR MRJ3 480V 2 KW MITSUBISHI

TABLA A-1. PIEZAS DE REPUESTO

Ctd.	Número de pieza	Descripción
Versión 200V		
1	63761	MOTOR SERVO MITSUBISHI 15KW 2000 RPM 200V CON FRENO
1	63762	SERVOAMPLIFICADOR MRJ3 200V 2 KW MITSUBISHI

TABLA A-2. KIT DE HERRAMIENTAS N/P 62029

N/P	DESCRIPCIÓN	CTD
14735	EXTENSIÓN DE LLAVE 1/2 ACC. X 10	1
14818	LLAVE DE CARRACA 1/2 ACC	1
19700	CONTENEDOR ENVÍO TECHO PLANO 20 X 875 X 105	2
33999	LLAVE HEXAGONAL SET 050 - 3/8 BONDHUS EXTREMO BOLA (KB)	1
35516	GOLPE MORTAL CON MARTILLO1-3/4 DIA CABEZAL (KB)	1
38678	LLAVE HEXAGONAL SET 15 - 10MM BONDHUS EXTREMO BOLA (KB)	1
46249	LLAVE DE VASO HEXAGONAL 14MM X 1/2	1
46250	LLAVE DE VASO HEXAGONAL 10MM X 1/2	1
46252	LLAVE DE VASO HEXAGONAL 17MM X 1/2	1
46253	LLAVE DE VASO HEXAGONAL 12MM X 1/2	1
53197	COMBINACIÓN DE LLAVES 24mm 12PT 338mmLG ACABADO SATINADO	1
58350	LLAVE FIN 46mm X 8-9/16 ACCESO LARGO Y FINO	2
58368	INDICADOR ELECTRÓNICO 500 RECORRIDO 2-1/4 FRONTAL 0005" INC	1
58375	LLAVE DE VASO HEXAGONAL 19MM X 1/2	1
63469	VOLANTE MANUAL MODIFICADO 5 DIA 1/2" HEX	1
64370	SOPORTE INDICADOR BRAZO ARTICULADO CON BASE MAGNÉTICA 282MM REACH NOGA	1
65183	LUBRICANTE ANTI AGARROTAMIENTO MOLY GRAFITO EXTREMA PRESIÓN 10 OZ LATA	1
65188	TENSOR DE LLAVE 110MM A 115MM (4-1/2) DIÁ. 300 DIÁ	2
69465	EXTREMO LLAVE 46MM COMBINACIÓN LARGA	1
76807	LLAVE 3-1/8" EXTREMO ABIERTO ÚNICO	1

APÉNDICE B ESQUEMAS

Lista esquemática

FIGURA B-1. ESQUEMA DEL CABLE DEL MANDO COLGANTE MR-J3 Y MR-J4 (N/P E00009) - - - - - - - - - - - - - 160
FIGURA B-2. DISPOSICIÓN DEL SISTEMA MR-J3 (N/P A00033) - 161
FIGURA B-3. CONJUNTO DE SUJECIÓN DE FRESADO MR-J3 Y MR-J4 (N/P B00070) - - - - - - - - - - - - - - - - 162
FIGURA B-4. CONJUNTO DE CAJA DE CONEXIONES MR-J3 Y MR-J4 (N/P B00083) - - - - - - - - - - - - - - - - 163
FIGURA B-5. CONJUNTO COLGANTE DE OPERADOR MR-J3 Y MR-J4 (N/P B00110) - - - - - - - - - - - - - - - - 164
FIGURA B-6. HOJA 1 DE MONTAJE EXTERIOR DEL PANEL DE CONTROL MR-J3 (N/P B00116) - - - - - - - - - - - - 165
FIGURA B-7. HOJA 2 DE MONTAJE INTERIOR DEL PANEL DE CONTROL MR-J3 (N/P B00116) - - - - - - - - - - - - 166
FIGURA B-8. MR-J3 HOJA ESQUEMÁTICA 1 (N/P C00088) - 167
FIGURA B-9. MR-J3 HOJA ESQUEMÁTICA 2 (N/P C00088) - 168
FIGURA B-10. MR-J3 HOJA ESQUEMÁTICA 3 (N/P C00088) - 169
FIGURA B-11. ESQUEMA MR-J4 (N/P A00093) - 170
FIGURA B-12. CONJUNTO DEL PANEL DE CONTROL MR-J4 EXTERIOR (N/P B000394) - - - - - - - - - - - - - - - 171
FIGURA B-13. CONJUNTO DEL PANEL DE CONTROL MR-J4 INTERIOR (N/P B00394) - - - - - - - - - - - - - - - 172
FIGURA B-14. MR-J4 HOJA ESQUEMÁTICA 1 (N/P C00526) - 173
FIGURA B-15. MR-J4 HOJA ESQUEMÁTICA 2 (N/P C00526) - 174
FIGURA B-16. MR-J4 HOJA ESQUEMÁTICA 3 (N/P C00526) - 175

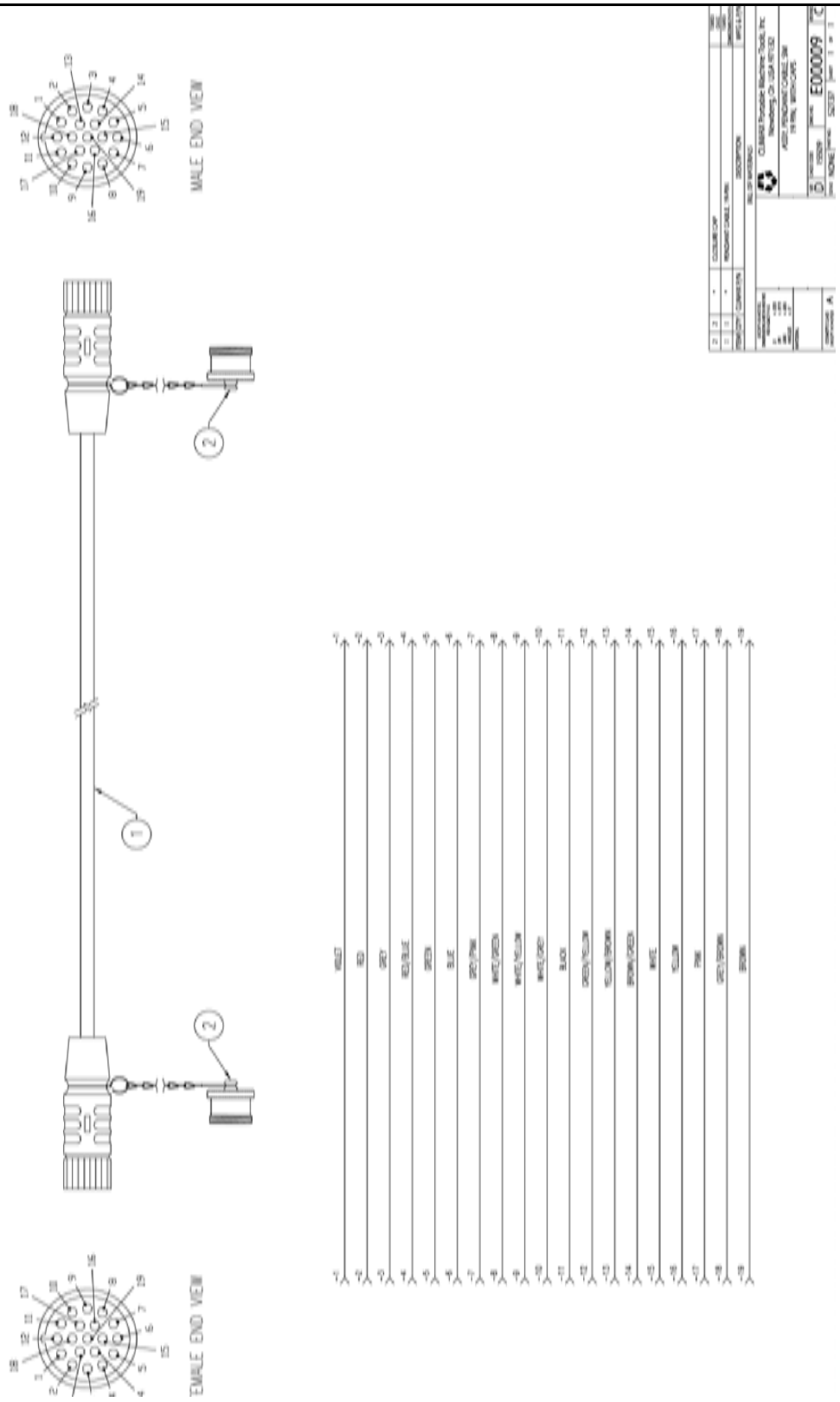

FIGURA B-1. ESQUEMA DEL CABLE DEL MANDO COLGANTE MR-J3 Y MR-J4 (N/P E00009)

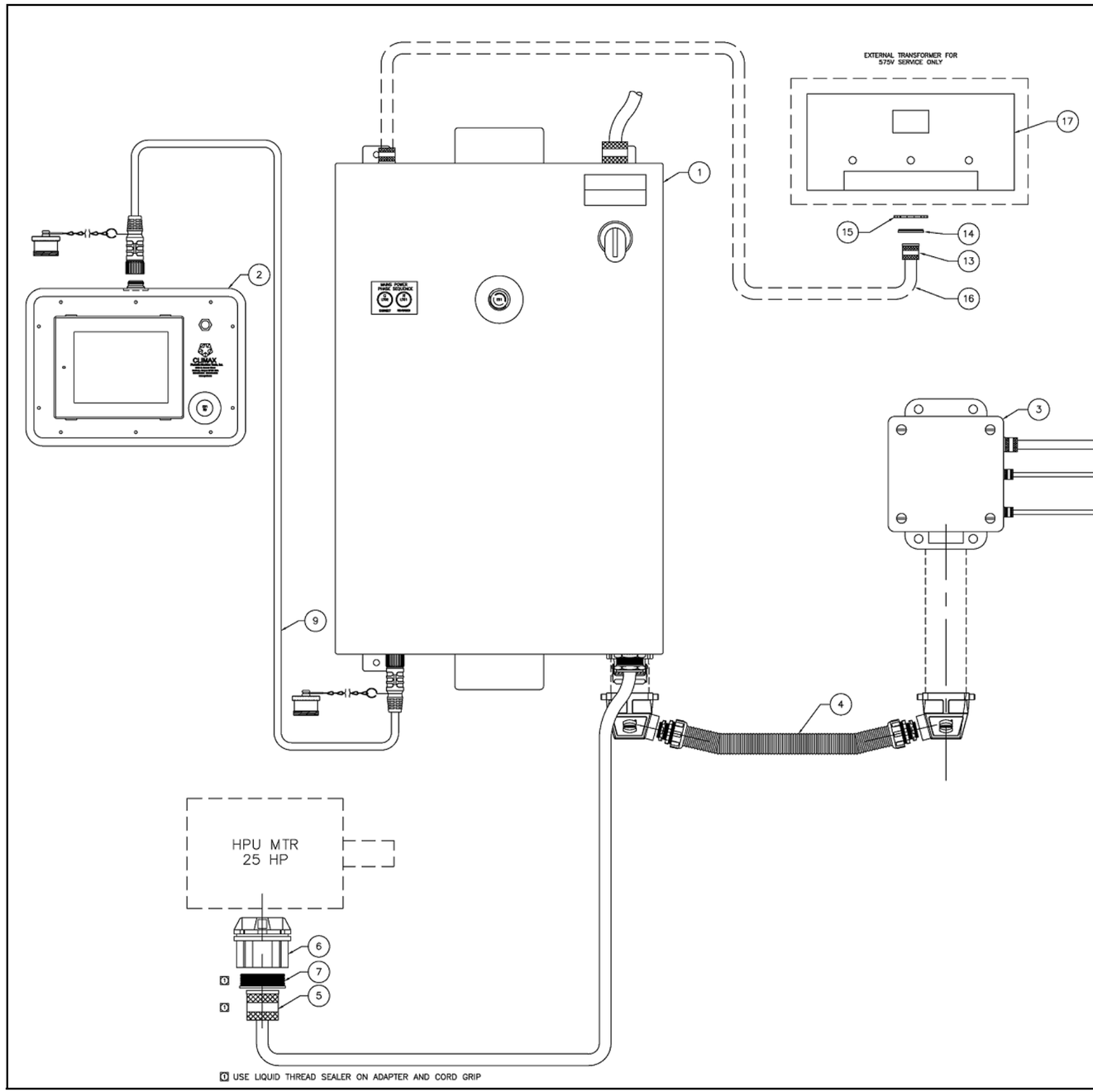

CLIMAX CM6200 PART NUMBERS

DESCRIPTION	UPPER LEVEL ASSEMBLY w/ AIR	UPPER LEVEL ASSEMBLY w/o AIR	VOLTAGE	BASE UNIT (HPU) w/ AIR	BASE UNIT (HPU) w/o AIR	CONTROLS	PENDANT
25 HP CM6200 SERVO WITH AIR	63135	63186	230	62749	64089	62258	64096
	63138	63190	460			62375	
	63137	63189	200–208	62750	64090	63062	
	63136	63187	380–415			62337	
	63139	63191	575	62751	64091	62422	

NOTE: ITEMS 13 THRU 17 ARE FOR 575VAC VERSION OF PANEL ONLY.

NOTE: FOR DUPLICATE ITEM NUMBERS, SELECT ITEM BY INPUT VOLTAGE OF PANEL. SEE SCHEMATIC C00088 FOR REFERENCE.

ITEM	QTY	DESCRIPTION	MFG	P/N
17	1	360KVA, 600 - 480VAC STEP DOWN TRANSFORMER	ACME	T-2A-79516-1S
16	10	FT, CABLE AT TRANSFORMER, 16/7 (7/16'd)	ANIXTER	4A-1607
15	1	LOCKNUT, 1/2"	APPLETON	BL50
14	1	METAL CLAD O-RING, 1/2"	APPLETON	STG-50
13	1	CORD GRIP AT TRANSFORMER, .375 - .500"	APPLETON	CG-3750S
12	1	CLIMAX SHIPPING LABEL	*	*
11	1	PROGRAMMING, PLC	AUTOMATION SOLUTIONS	Z00038
10	1	PROGRAMMING, PENDANT HMI	AUTOMATION SOLUTIONS	Z00039
9	1	CORDSET, 19 PIN, SHIELDED, WITH CAPS	AUTOMATION SOLUTIONS	E00009
8	1	SERVO MOTOR, 1.5KW, 460VAC, FOR 380 - 575VAC	MITSUBISHI	HF-SP1524BK
8	1	SERVO MOTOR, 1.5KW, 230VAC, FOR 200 - 230VAC	MITSUBISHI	HF-SP152BK
7	1	REDUCING BUSHING, 2" - 1.25" FOR 315 - 575VAC	APPLETON	RB200-125
7	1	REDUCING BUSHING, 2" - 1.5", FOR 200 - 230VAC	APPLETON	RB200-150
6	1	ZINC HUB CONNECTOR, 2"	APPLETON	HUB-200D
5	1	CORD GRIP, 1 1/4" NPT, 1.00" - 1.125", FOR 315 - 575VAC	APPLETON	CG-1001255
5	1	CORD GRIP, 1 1/2" NPT, 1.281" - 1.531", FOR 200 - 230VAC	APPLETON	CG-1281505
4	1	MILL TETHER	AUTOMATION SOLUTIONS	B00070
3	1	MILL JUNCTION BOX	AUTOMATION SOLUTIONS	B00083
2	1	12" TOUCH SCREEN PENDANT	AUTOMATION SOLUTIONS	B00110
1	1	CONTROL ENCLOSURE, SERVO ROTARY MILL w/HPU	AUTOMATION SOLUTIONS	B00116

BILL OF MATERIALS

EXCEPT AS NOTED, DIMENSIONS ARE IN INCHES PER ASME Y14.5
.X ± .020
.XX ± .010
.XXX ± .005
ANGLES ± 5°
MATERIAL

CLIMAX Portable Machine Tools, Inc
Newberg, Or. USA 97132

CM6200 CONTROLS
SYSTEM LAYOUT

SIZE D | CAGE CODE 15509 | DWG NO. A00033 | REVISION B

FIGURA B-2. DISPOSICIÓN DEL SISTEMA MR-J3 (N/P A00033)

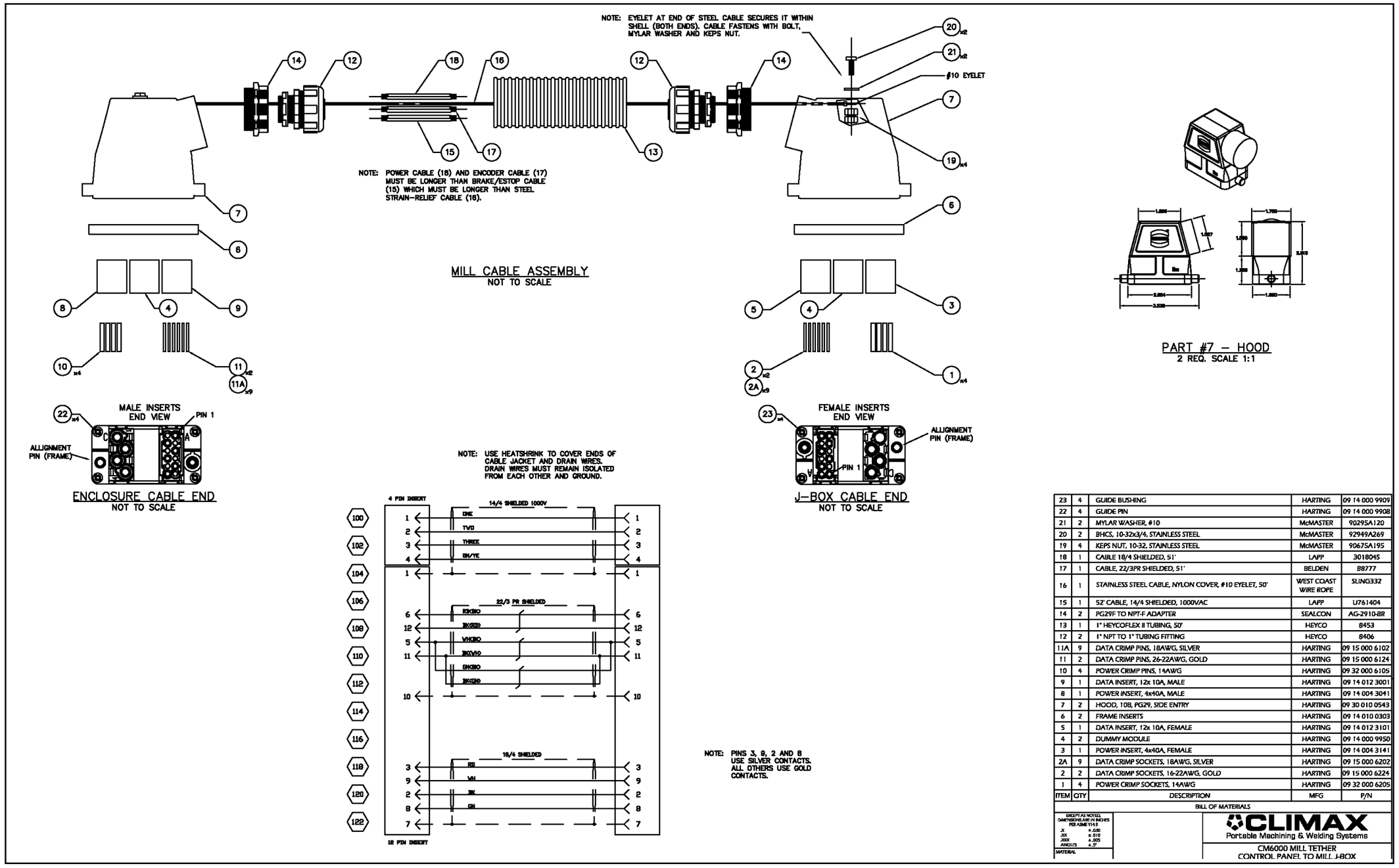

ITEM	QTY	DESCRIPTION	MFG	P/N
23	4	GUIDE BUSHING	HARTING	09 14 000 9909
22	4	GUIDE PIN	HARTING	09 14 000 9908
21	2	MYLAR WASHER, #10	McMASTER	90295A120
20	2	BHCS, 10-32x3/4, STAINLESS STEEL	McMASTER	92949A269
19	4	KEPS NUT, 10-32, STAINLESS STEEL	McMASTER	90675A195
18	1	CABLE 18/4 SHIELDED, 51'	LAPP	3018045
17	1	CABLE, 22/3PR SHIELDED, 51'	BELDEN	88777
16	1	STAINLESS STEEL CABLE, NYLON COVER, #10 EYELET, 50'	WEST COAST WIRE ROPE	SLING332
15	1	52' CABLE, 14/4 SHIELDED, 1000VAC	LAPP	U761404
14	2	PG29F TO NPT-F ADAPTER	SEALCON	AG-2910-BR
13	1	1" HEYCOFLEX II TUBING, 50'	HEYCO	8453
12	2	1" NPT TO 1" TUBING FITTING	HEYCO	8406
11A	9	DATA CRIMP PINS, 18AWG, SILVER	HARTING	09 15 000 6102
11	2	DATA CRIMP PINS, 26-22AWG, GOLD	HARTING	09 15 000 6124
10	4	POWER CRIMP PINS, 14AWG	HARTING	09 32 000 6105
9	1	DATA INSERT, 12x 10A, MALE	HARTING	09 14 012 3001
8	1	POWER INSERT, 4x40A, MALE	HARTING	09 14 004 3041
7	2	HOOD, 10B, PG29, SIDE ENTRY	HARTING	09 30 010 0543
6	2	FRAME INSERTS	HARTING	09 14 010 0303
5	1	DATA INSERT, 12x 10A, FEMALE	HARTING	09 14 012 3101
4	2	DUMMY MODULE	HARTING	09 14 000 9950
3	1	POWER INSERT, 4x40A, FEMALE	HARTING	09 14 004 3141
2A	9	DATA CRIMP SOCKETS, 18AWG, SILVER	HARTING	09 15 000 6202
2	2	DATA CRIMP SOCKETS, 16-22AWG, GOLD	HARTING	09 15 000 6224
1	4	POWER CRIMP SOCKETS, 14AWG	HARTING	09 32 000 6205

BILL OF MATERIALS

UNLESS OTHERWISE DIMENSIONS ARE IN INCHES PER ASME Y14.5
X ±.030
XX ±.010
XXX ±.005
ANGLES ±.5°
MATERIAL

CLIMAX
Portable Machining & Welding Systems
CM6000 MILL TETHER
CONTROL PANEL TO MILL J-BOX

FIGURA B-3. ESQUEMA DE SUJECIÓN DE FRESADO MR-J3 Y MR-J4 (N/P B00070)

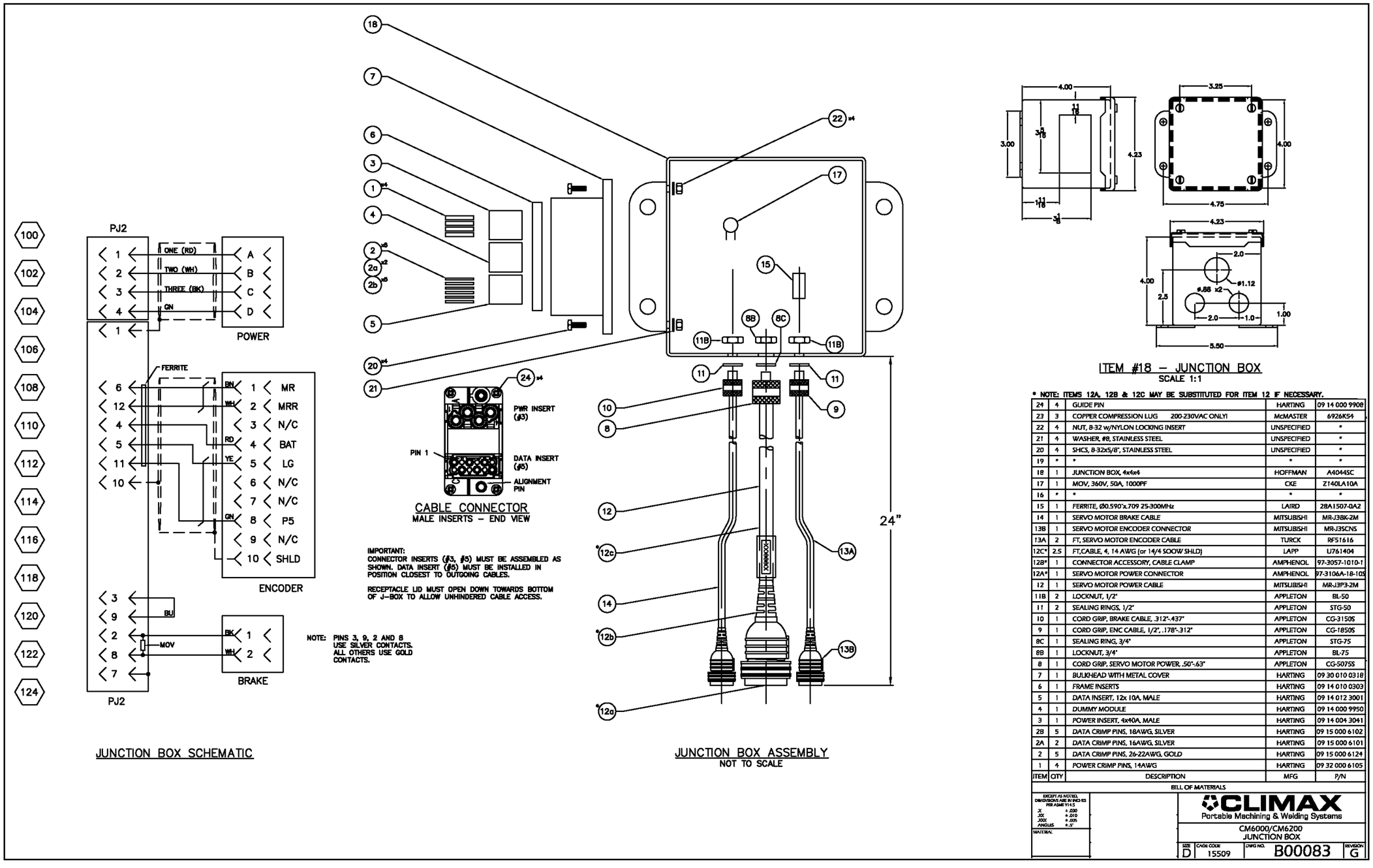

* NOTE: ITEMS 12A, 12B & 12C MAY BE SUBSTITUTED FOR ITEM 12 IF NECESSARY.

ITEM	QTY	DESCRIPTION	MFG	P/N
24	4	GUIDE PIN	HARTING	09 14 000 9908
23	3	COPPER COMPRESSION LUG 200-230VAC ONLY!	McMASTER	6926K54
22	4	NUT, 8-32 w/NYLON LOCKING INSERT	UNSPECIFIED	*
21	4	WASHER, #8, STAINLESS STEEL	UNSPECIFIED	*
20	4	SHCS, 8-32x5/8", STAINLESS STEEL	UNSPECIFIED	*
19	*	*	*	*
18	1	JUNCTION BOX, 4x4x4	HOFFMAN	A4044SC
17	1	MOV, 360V, 50A, 1000PF	CKE	Z140LA10A
16	*	*	*	*
15	1	FERRITE, Ø0.590"x.709 25-300MHz	LAIRD	28A1507-0A2
14	1	SERVO MOTOR BRAKE CABLE	MITSUBISHI	MR-J3BK-2M
13B	1	SERVO MOTOR ENCODER CONNECTOR	MITSUBISHI	MR-J3SCNS
13A	2	FT, SERVO MOTOR ENCODER CABLE	TURCK	RF51616
12C*	2.5	FT,CABLE, 4, 14 AWG (or 14/4 SOOW SHLD)	LAPP	U761404
12B*	1	CONNECTOR ACCESSORY, CABLE CLAMP	AMPHENOL	97-3057-1010-1
12A*	1	SERVO MOTOR POWER CONNECTOR	AMPHENOL	97-3106A-18-10S
12	1	SERVO MOTOR POWER CABLE	MITSUBISHI	MR-J3P3-2M
11B	2	LOCKNUT, 1/2"	APPLETON	BL-50
11	2	SEALING RINGS, 1/2"	APPLETON	STG-50
10	1	CORD GRIP, BRAKE CABLE, .312"-.437"	APPLETON	CG-3150S
9	1	CORD GRIP, ENC CABLE, 1/2", .178"-.312"	APPLETON	CG-1850S
8C	1	SEALING RING, 3/4"	APPLETON	STG-75
8B	1	LOCKNUT, 3/4"	APPLETON	BL-75
8	1	CORD GRIP, SERVO MOTOR POWER, .50"-.63"	APPLETON	CG-5075S
7	1	BULKHEAD WITH METAL COVER	HARTING	09 30 010 0318
6	1	FRAME INSERTS	HARTING	09 14 010 0303
5	1	DATA INSERT, 12x 10A, MALE	HARTING	09 14 012 3001
4	1	DUMMY MODULE	HARTING	09 14 000 9950
3	1	POWER INSERT, 4x40A, MALE	HARTING	09 14 004 3041
2B	5	DATA CRIMP PINS, 18AWG, SILVER	HARTING	09 15 000 6102
2A	2	DATA CRIMP PINS, 16AWG, SILVER	HARTING	09 15 000 6101
2	5	DATA CRIMP PINS, 26-22AWG, GOLD	HARTING	09 15 000 6124
1	4	POWER CRIMP PINS, 14AWG	HARTING	09 32 000 6105

BILL OF MATERIALS

EXCEPT AS NOTED, DIMENSIONS ARE IN INCHES PER ASME Y14.5
X ±.030
.XX ±.010
.XXX ±.005
ANGLES ±.5°
MATERIAL

CLIMAX
Portable Machining & Welding Systems
CM6000/CM6200
JUNCTION BOX
SIZE D | CAGE CODE 15509 | DWG NO. B00083 | REVISION G

FIGURA B-4. MONTAJE DE CAJA DE CONEXIONES MR-J3 Y MR-J4 (N/P B00083)

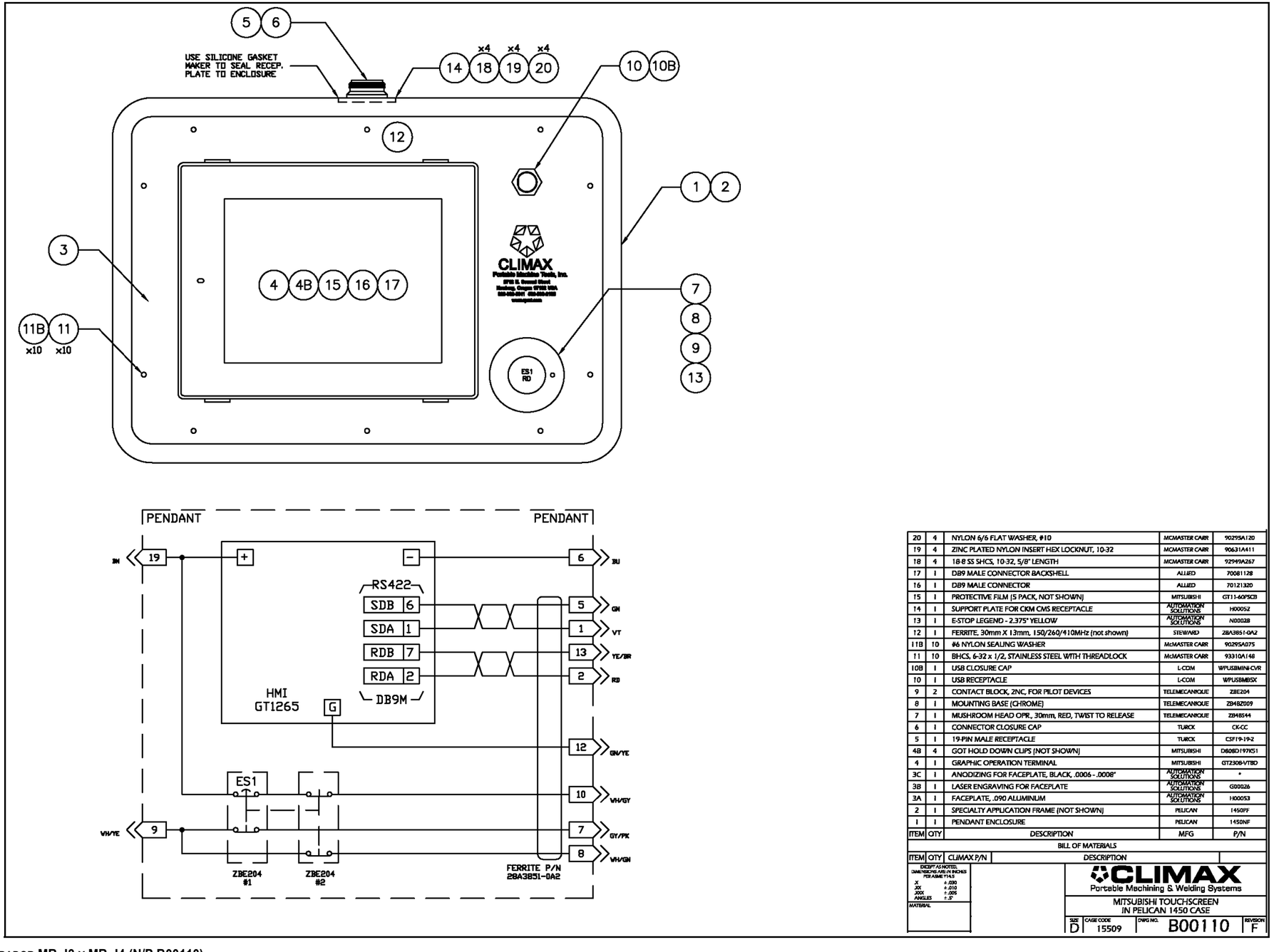

ITEM	QTY	DESCRIPTION	MFG	P/N
20	4	NYLON 6/6 FLAT WASHER, #10	MCMASTER CARR	90295A120
19	4	ZINC PLATED NYLON INSERT HEX LOCKNUT, 10-32	MCMASTER CARR	90631A411
18	4	18-8 SS SHCS, 10-32, 5/8" LENGTH	MCMASTER CARR	92949A267
17	1	DB9 MALE CONNECTOR BACKSHELL	ALLIED	70081128
16	1	DB9 MALE CONNECTOR	ALLIED	70121320
15	1	PROTECTIVE FILM (5 PACK, NOT SHOWN)	MITSUBISHI	GT11-60PSCB
14	1	SUPPORT PLATE FOR CKM CMS RECEPTACLE	AUTOMATION SOLUTIONS	H00052
13	1	E-STOP LEGEND - 2.375" YELLOW	AUTOMATION SOLUTIONS	N00028
12	1	FERRITE, 30mm X 13mm, 150/260/410MHz (not shown)	STEWARD	28A3851-0A2
11B	10	#6 NYLON SEALING WASHER	McMASTER CARR	90295A075
11	10	BHCS, 6-32 x 1/2, STAINLESS STEEL WITH THREADLOCK	McMASTER CARR	93310A148
10B	1	USB CLOSURE CAP	L-COM	WPUSBMINI-CVR
10	1	USB RECEPTACLE	L-COM	WPUSBMBSX
9	2	CONTACT BLOCK, 2NC, FOR PILOT DEVICES	TELEMECANIQUE	ZBE204
8	1	MOUNTING BASE (CHROME)	TELEMECANIQUE	ZB4BZ009
7	1	MUSHROOM HEAD OPR., 30mm, RED, TWIST TO RELEASE	TELEMECANIQUE	ZB4BS44
6	1	CONNECTOR CLOSURE CAP	TURCK	CK-CC
5	1	19-PIN MALE RECEPTACLE	TURCK	CSF19-19-2
4B	4	GOT HOLD DOWN CLIPS (NOT SHOWN)	MITSUBISHI	D80BD197KS1
4	1	GRAPHIC OPERATION TERMINAL	MITSUBISHI	GT2308-VTBD
3C	1	ANODIZING FOR FACEPLATE, BLACK, .0006 - .0008"	AUTOMATION SOLUTIONS	*
3B	1	LASER ENGRAVING FOR FACEPLATE	AUTOMATION SOLUTIONS	G00026
3A	1	FACEPLATE, .090 ALUMINUM	AUTOMATION SOLUTIONS	H00053
2	1	SPECIALTY APPLICATION FRAME (NOT SHOWN)	PELICAN	1450FF
1	1	PENDANT ENCLOSURE	PELICAN	1450NF

BILL OF MATERIALS

ITEM	QTY	CLIMAX P/N	DESCRIPTION

EXCEPT AS NOTED, DIMENSIONS ARE IN INCHES PER ASME Y14.5

X	±.030
XX	±.010
.XXX	±.005
ANGLES	±.5°

MATERIAL

CLIMAX
Portable Machining & Welding Systems

MITSUBISHI TOUCHSCREEN IN PELICAN 1450 CASE

SIZE	CAGE CODE	DWG NO.	REVISION
D	15509	B00110	F

FIGURA B-5. CONJUNTO COLGANTE DE OPERADOR MR-J3 Y MR-J4 (N/P B00110)

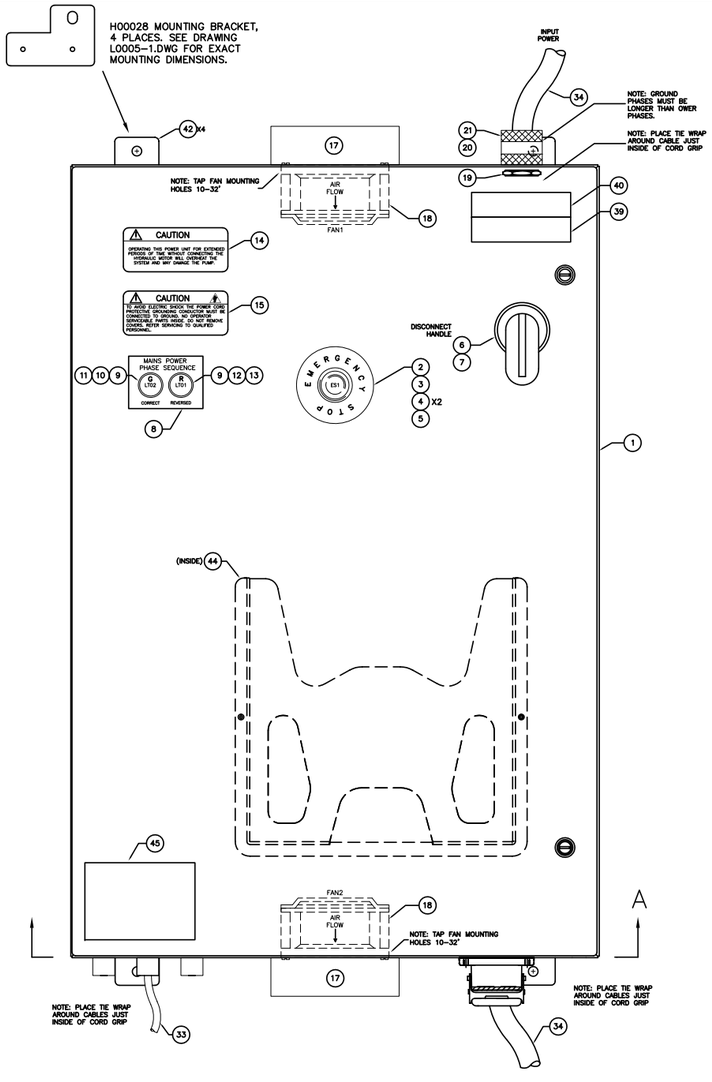

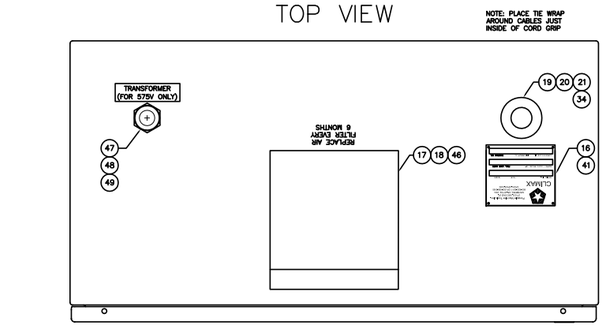

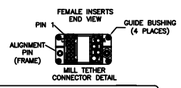

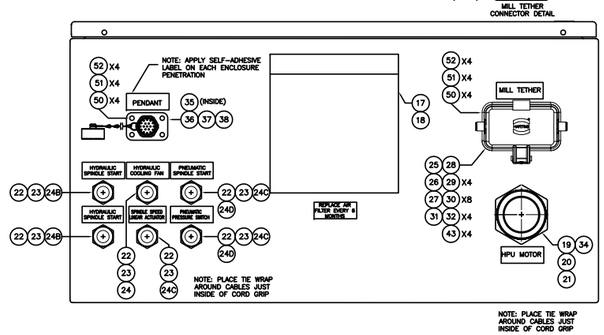

NOTE: FOR DUPLICATE ITEM NUMBERS, SELECT ITEM BY INPUT VOLTAGE OF PANEL. SEE SCHEMATIC C00088 FOR REFERENCE.

ITEM	QTY	DESCRIPTION	MFG	P/N
		BILL OF MATERIALS		
43	4	GUIDE BUSHINGS	HARTING	09 14 000 9909
42	4	ENCLOSURE MOUNTING BRACKETS	AUTOMATION SOLUTIONS	H00028
41	4	SCREW DRIVE #2 X 1/4	FASTENAL	32213
40	1	575V LABEL - 4.5 X 1.125	MCMASTER	5894T922
40	1	460V LABEL - 4.5 X 1.125	MCMASTER	5894T862
40	1	415V LABEL - 4.5 X 1.125	PANDUIT	PCV-415BY
40	1	380V LABEL - 4.5 X 1.125	MCMASTER	5894T912
40	1	230V LABEL - 4.5 X 1.125	MCMASTER	5894T832
40	1	208V LABEL - 4.5 X 1.125	MCMASTER	5894T842
39	1	THREE PHASE LABEL - 4.5 X 1.125	MCMASTER	5894T4
38	1	CLOSURE CAP	TURCK	CK-CC
37	1	SUPPORT PLATE FOR CKM CMS SUPPORT PLATE	AUTOMATION SOLUTIONS	H00052
36	1	RECEPTACLE, 19 PIN, FEMALE, 2 METER	TURCK	CKF 19-19-2
35	1	FERRITE BEAD, CABLE, 196 OHMS @ 100MHz	ALLIED	314-0253
34	25	FT, PORTABLE POWER CORD, 8-4C, TYPE W FOR 460-575VAC	ANIXTER	5B-0804C
34	25	FT, PORTABLE POWER CORD, 6-4C, TYPE W FOR 380-415VAC	ANIXTER	5B-0604C
34	25	FT, PORTABLE POWER CORD, 2-4C, TYPE W FOR 200-230VAC	ANIXTER	5B-0204C
33	11	FT, CORD, 16AWG, 2 CONDUCTOR, SEOOW	COMMONLY AVAILABLE	-
32	4	HAN MODULAR CONNECTOR, CONTACT, FEMALE, AWG 14	HARTING	09 32 000 6205
31	1	HAN MODULAR CONNECTOR, HOUSING, BULKHEAD MOUNT	HARTING	09 30 010 0318
30	10	HAN MODULAR CONNECTOR, CONTACT, FEMALE AWG 26-22	HARTING	09 15 000 6224
29	4	HAN MODULAR CONNECTOR, CONTACT, FEMALE AWG 16	HARTING	09 15 000 6201
28	1	HAN MODULAR CONNECTOR, FEMALE INSERT, 12 PIN	HARTING	09 14 012 3101
27	1	HAN MODULAR CONECTOR, FRAME FOR 3 MODULES	HARTING	09 14 010 0303
26	1	HAN MODULAR CONNECTOR, FEMALE INSERT, 4 PINS	HARTING	09 14 004 3141
25	1	HAN MODULAR CONNECTOR, DUMMY MODULE	HARTING	09 14 000 9950
24D	2	HOLE PLUG	HOFFMAN	AS050
24C	3	CORD GRIP, 1/2" NPT, 0.125" - 0.187" CORD	APPLETON	CG-1250S
24B	2	CORD GRIP, 1/2" NPT, 0.187" - 0.312" CORD	APPLETON	CG-1850S
24	1	CORD GRIP, 1/2" NPT, 0.312" - 0.437" CORD	APPLETON	CG-3150S
23	6	LOCKNUT, 1/2" NPT	APPLETON	BL-50
22	6	O-RING 1/2" NPT	APPLETON	STG-50
21	2	CORD GRIP, 1 1/4" NPT, 1.00" - 1.125" CORD, FOR 315 - 575VAC	APPLETON	CG-1001255
21	2	CORD GRIP, 1 1/2" NPT, 1.281" - 1.531" CORD, FOR 200 - 230VAC	APPLETON	CG-1281505
20	2	O-RING 1 1/4" NPT, FOR 315 - 575VAC	APPLETON	STG-125
20	2	O-RING 1 1/2" NPT, FOR 200 - 230VAC	APPLETON	STG-150
19	2	LOCKNUT, 1 1/4" NPT, FOR 315 - 575VAC	APPLETON	BL125
19	2	LOCKNUT, 1 1/2" NPT, FOR 200 -230VAC	APPLETON	BL150
18	2	FANS, 24VDC	ORION	OD1238-24HB
17	2	EXHAUST	HAEWA	3142-0148-00-07
16	1	NAMEPLATE ELECTRICAL PANELS	CLIMAX	39125
15	1	LABEL, CAUTION ELECTRIC	CLIMAX	37576
14	1	LABEL, CAUTION HYDRAULIC OVERHEAT	CLIMAX	15396
13	1	LED MODULE, 24VAC/DC, RED	TELEMECANIQUE	ZBVB4
12	1	PILOT LIGHT OPERATOR, RED	TELEMECANIQUE	ZB4BV043
11	1	LED MODULE, 24VAC/DC, GREEN	TELEMECANIQUE	ZBVB3
10	1	PILOT LIGHT OPERATOR, GREEN	TELEMECANIQUE	ZB4BV033
9	2	MOUNTING BASE	TELEMECANIQUE	ZB4BZ009
8	1	LEGEND PLATE, "PHASE SEQUENCE"	AUTOMATION SOLUTIONS	F00011
7	1	DISCONNECT SHAFT FOR 575VAC	ABB	OXP10X500
7	1	DISCONNECT SHAFT	ABB	OXPX290
6	1	DISCONNECT HANDLE FOR 575VAC	ABB	OHY95L10
6	1	DISCONNECT HANDLE	ABB	OHY80L6
5	1	PUSHBUTTON LEGEND, "EMERGENCY STOP"	TELEMECANIQUE	ZBY8330
4	2	CONTACT BLOCK, NC	TELEMECANIQUE	ZBE102
3	1	MOUNTING BASE, CHROME	TELEMECANIQUE	ZB4BZ009
2	1	MUSH-HEAD OPERATOR	TELEMECANIQUE	ZB4B554
1	1	ENCLOSURE, 36" X 24" X12"	AUTOMATION SOLUTIONS	L00005

52	8	#6 KEPS NUT	McMASTER	90675A007
51	8	#6 NYLON WASHER	MCMASTER	90295A35
50	8	6-32 BUTTON HEAD CAP SCREW, 1/2"	McMASTER	92949A146
49	1	CORD GRIP, 3/4" NPT, .375" - .500" CORD, FOR 575VAC	APPLETON	CG-3775S
48	1	O-RING 3/4" NPT, FOR 575VAC	APPLETON	STG-75
47	1	LOCKNUT, 3/4" NPT, FOR 575VAC	APPLETON	BL75
46	2	LEVER LOCK TERMINAL BLOCKS	WAGO	222-412
45	1	ARCFLASH WARNING LABEL	SAFETY SIGN	J5543
44	1	DATA POCKET	HOFFMAN	ADP2

EXCEPT AS NOTED: DIMENSIONS ARE IN INCHES PER ASME Y14.5
X ± .030
.XX ± .010
.XXX ± .005
ANGLES ± 5°
MATERIAL
COSMETIC CLASS EXCEPT AS NOTED: A

CLIMAX
Portable Machining & Welding Systems

CM6200 ROTARY MILL
MULTIPLE VOLTAGES

SIZE D | CAGE CODE 15509 | DWG NO. B00116 | REVISION K
SCALE NONE | SHEET 1 OF 2

PROJECT DRAWINGS	DRAWING #	CLIMAX PART #	NOTES
TOP LEVEL ASSEMBLY	A00033	"	"
SCHEMATIC	C00088	"	"
LAYOUT: CONTROL PANEL	B00116-1, B00116-2	"	"
LAYOUT: PENDANT	B00110	"	"
LAYOUT: MISC	B00083	"	J-BOX ASSY
CABLE ASSY 1	B00070	"	MILL TETHER ASSY
CABLE ASSY 2	E00009	"	PENDANT CABLE ASSY
CABLE ASSY 3	-	"	-
ENCLOSURE MECHANICALS	L00005	"	MECHANICAL DIMS

FIGURA B-6. HOJA 1 DE MONTAJE EXTERIOR DEL PANEL DE CONTROL MR-J3 (N/P B00116)

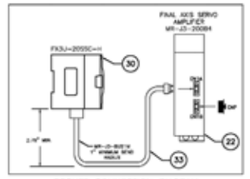

SSCNET CONNECTION DIAGRAM

CONTROLS ENCLOSURE
(INSIDE VIEW)

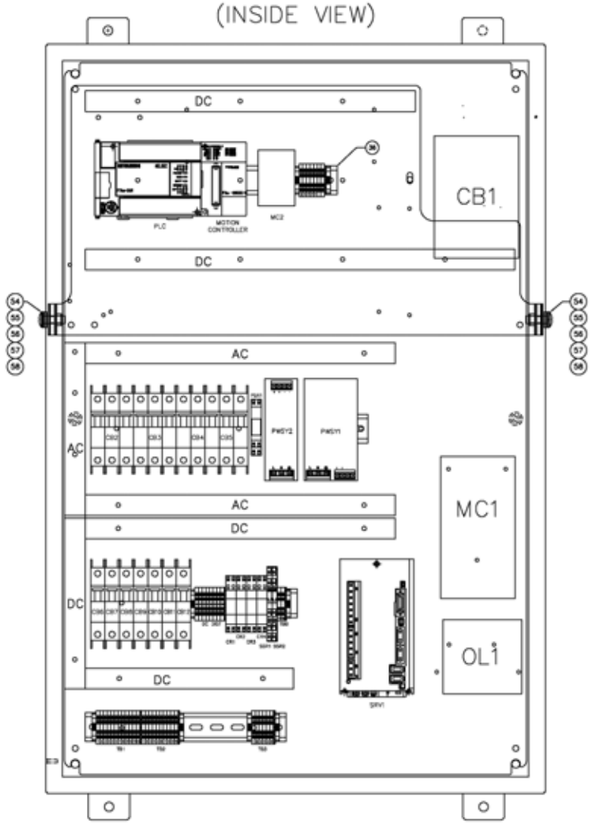

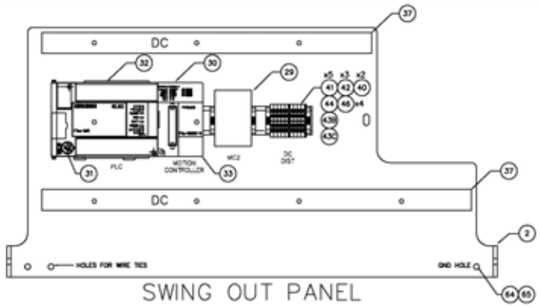

SWING OUT PANEL

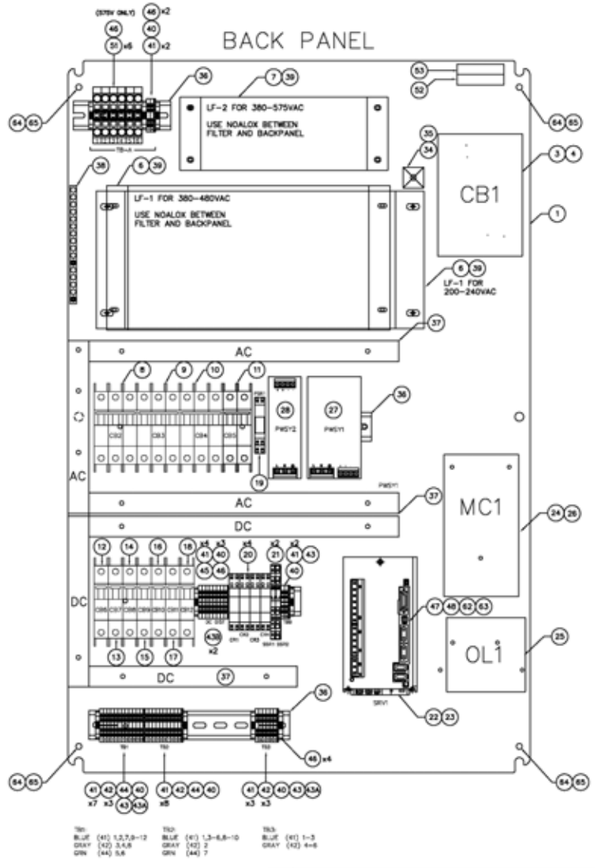

NOTE: FOR DUPLICATE ITEM NUMBERS, SELECT ITEM BY INPUT VOLTAGE OF PANEL. SEE SCHEMATIC C00088 FOR REFERENCE.

ITEM	QTY	DESCRIPTION	MFG.	P/N
		BILL OF MATERIALS		
1	1	BACK PANEL	AUTOMATION SOLUTIONS	H00029
2	1	SWING OUT PANEL	AUTOMATION SOLUTIONS	K00031
3	1	CB1, MAIN BREAKER, 150A, FOR 200 - 230VAC	ABB	T3N150TW
3	1	CB1, MAIN BREAKER, 80A, FOR 380 - 460VAC	ABB	T1N080TL
3	1	CB1, MAIN BREAKER, 60A, FOR 575VAC	ABB	T5N060TW
4	1	DISCONNECT KIT FOR T3 & T3N BREAKER	ABB	KT3VD-M
4	1	DISCONNECT KIT FOR T5N BREAKER - 575VAC	ABB	KT53-VDM
		SEE ITEMS 60 & 61 FOR DISCONNECT LUG KITS		
6	1	LF1, LINE FILTER, 100A FOR 200 - 230VAC	RADIUS POWER	RP325-100-10005
6A	1	LF1, MOUNTING KIT, FOR 380 - 460VAC	CORCOM	AA405
6	1	LF1, LINE FILTER, 60A, FOR 380 - 460VAC	CORCOM	60AY16C-F7477
7	1	LF2, LINE FILTER, 15A, FOR 575VAC	RADIUS POWER	RP380-15-10005
7	1	LF2, LINE FILTER, 15A, FOR 380 - 460VAC	RADIUS POWER	RP325-15-10005
8	1	CB2, CIRCUIT BREAKER, 3 POLE, 1A, FOR 200-230VAC	TELEMECANIQUE	60168
8	1	CB2, CIRCUIT BREAKER, 3 POLE, 1A, FOR 380-575VAC	TELEMECANIQUE	MGN61356
9	1	CB3, CIRCUIT BREAKER, 3 POLE, 20A, FOR 200-230VAC	TELEMECANIQUE	60180
9	1	CB3, CIRCUIT BREAKER, 3 POLE, 15A, FOR 380-575VAC	TELEMECANIQUE	MGN61331
10	1	CB4, CIRCUIT BREAKER, 2 POLE, 10A, FOR 200-230VAC	TELEMECANIQUE	60144
10	1	CB4, CIRCUIT BREAKER, 3 POLE, 6A, FOR 380-575VAC	TELEMECANIQUE	MGN61328
11	1	CB5, CIRCUIT BREAKER, 2 POLE, 10A, FOR 200-230VAC	TELEMECANIQUE	60144
11	1	CB5, CIRCUIT BREAKER, 2 POLE, 6A, FOR 380-575VAC	TELEMECANIQUE	MGN61317
12	1	CB6, CIRCUIT BREAKER, 1 POLE, 2A, FOR ALL VOLTAGES	TELEMECANIQUE	60103
13	1	CB7, CIRCUIT BREAKER, 1 POLE, 8A, FOR ALL VOLTAGES	TELEMECANIQUE	60109
14	1	CB8, CIRCUIT BREAKER, 1 POLE, 2A, FOR ALL VOLTAGES	TELEMECANIQUE	60103
15	1	CB9, CIRCUIT BREAKER, 1 POLE, 5A, FOR ALL VOLTAGES	TELEMECANIQUE	60106
16	1	CB10, CIRCUIT BREAKER, 1 POLE, 1A, FOR ALL VOLTAGES	TELEMECANIQUE	60101
17	1	CB11, CIRCUIT BREAKER, 1 POLE, 2A, FOR ALL VOLTAGES	TELEMECANIQUE	60103
18	1	CB12, CIRCUIT BREAKER, 1 POLE, 3A, FOR ALL VOLTAGES	TELEMECANIQUE	60104
19	1	PHASE SEQUENCE RELAY	TELEMECANIQUE	RM4TG20
20	4	CR1, CR2, CR3, CR4, RELAY, DPDT	WAGO	788-312
21	2	SSR1, SSR2, SOLID STATE RELAY	WAGO	859-740
22	1	SERVO AMP, 2KW, 400V FOR 200 - 230VAC	MITSUBISHI	MR-J3-20085
22	1	SERVO AMP, 2KW, 400V FOR 380 - 575VAC	MITSUBISHI	MR-J3-200B54
23	1	ENCODER CABLE, 2M	MITSUBISHI	MR-J3ENSCBL2M-H
24	1	MC1, CONTACTOR, 80A, 24VDC, FOR 200 -230VAC	EATON	XTCE080F00TD
24	1	MC1, CONTACTOR, 40A, 24VDC, FOR 380 - 600VAC	EATON	XTCE040D00TD
25	1	OVERLOAD RELAY, 70A-100A, FOR 200-230VAC	EATON	XTOB100DC1
25	1	OVERLOAD RELAY, 50A-65A, FOR 380-415VAC	EATON	XTOB057DC1
26	1	OVERLOAD RELAY, 24A-40A, FOR 460V-575VAC	EATON	XTOB040DC1
27	1	AUX. CONTACTS FOR MC1	EATON	XTCEXFBG20
27	1	PWS1, POWER SUPPLY, 24VDC, 480W, FOR 200-230VAC	PULS	QT20.241
28	1	PWS2, POWER SUPPLY, 24VDC, 120W FOR 200-230VAC	PULS	CS5.241
28	1	PWS2, POWER SUPPLY, 24VDC, 120W FOR 380-575VAC	PULS	CT5.241
29	1	MC2, CONTACTOR, NON-REVERSING, 9A, 24VDC COIL	EATON	XTRMC10A10TD
30	1	FX3U SSCNENT 2 AXIS POSITIONING MODULE	MITSUBISHI	FX3U-20SSC-H
31	1	8 PIN MINI-DIN 8 CABLE - P/N CS-DINPDM8MM02-015	AMPHENOL	SEE DESCRIPTION
32	1	PLC	MITSUBISHI	FX3U-16MT/ESS
33	1	SSCNET III CABLE, 1 METER	MITSUBISHI	MR-J3BUS1M
34	1	THUMB SCREW FOR SWING OUT PANEL STANDOFF	MCMASTER	97008A612
35	1	STANDOFF FOR SWING OUT PANEL, CUT TO 6"	MCMASTER	4706ST209
36	3	DIN RAIL	EATON	XBAN35375PL
37	3	WIRE DUCT	ABB	QD100X300HW
38	1	GROUND BAR	EATON	GBK14
39	6	TERMINAL INSULATORS, BLACK, 200-230VAC & 575VAC	VTE	800NSV14
39	12	TERMINAL INSULATORS, BLACK, 380-460VAC	VTE	800NSV14
40	8	END PLATE, ORN	WAGO	2002-1292
41	28	TERM BLOCK, 5mm, BLUE	WAGO	2002-1204
42	10	TERM BLOCK, 5mm, GRAY	WAGO	2002-1201
43	3	JUMPER, 2 PIN	WAGO	2003-402
43A	3	JUMPER, 3 PIN	WAGO	2002-403
43B	3	JUMPER, 4 PIN	WAGO	2002-404
43C	1	JUMPER, 5 PIN	WAGO	2002-405
44	5	TERM BLOCK, 5mm, GREEN/YELLOW, GROUND	WAGO	2002-1207
45	1	END PLATE	WAGO	2006-1292
46	19	STOP BLOCK	WAGO	249-116
47	1	CN3 CONNECTOR	3M	10320-52F0-008
48	1	CN3 CONNECTOR	3M	10120-3000PE
49	1	SMALL FERRITE	STEWARD	28A3851-0A2
50	2	LARGE FERRITE	STEWARD	28A3851-0A2

ITEM	QTY	DESCRIPTION	MFG.	P/N
51	1	575V LABEL - 2.25 X .5	MCMASTER	58947923
52	1	460V LABEL - 2.25 X .5	MCMASTER	58947863
53	1	415V LABEL - 2.25 X .5	FANDUIT	PCV-415CY
53	1	380V LABEL - 2.25 X .5	MCMASTER	58947913
53	1	230V LABEL - 2.25 X .5	MCMASTER	58947833
53	1	208V LABEL - 2.25 X .5	MCMASTER	58947843
52	1	THREE PHASE LABEL - 2.25 X .5	MCMASTER	58947816
51	6	TERM BLOCK, 10MM, GRAY, 575VAC	WAGO	2006-1201
60	1	CB1, LUG KIT FOR MAIN BREAKER FOR 200 - 230VAC	ABB	KIT3225-3
59	1	COPPER COMPRESSION LUGS FOR 200-230VAC	MCMASTER	6926K54
58	2	3/8" GRADE 2 NYLON-INSERT THIN HEX LOCKNUT	MCMASTER	90566A031
57	2	3/4" OD NEOPRENE SEALING WASHER	MCMASTER	94709A418
56	2	1.5" OD, ZINC PLATED STEEL FLAT WASHER	MCMASTER	91090A115
55	4	1.5" OD LOW-FRICTION PTFE FLAT WASHER	MCMASTER	95630A487
54	2	3/8 X 1" MS, 18-8SS PAN HEAD	MCMASTER	91772A677
65	10	1/4-20 KEPS NUT	MCMASTER	90675A029
64	5	1/4-20 x 3/4" GND BOLT	MCMASTER	91309A5401
63	1	ENCODER CONNECTOR KIT	MITSUBISHI	MR-J3CNS
62	1	SERVO SAFETY CABLE PIGTAIL	MITSUBISHI	MR-D05UDL3M-B
61	1	CB1, LUG KIT FOR MAIN BREAKER, OUTGOING LUGS FOR 575V	ABB	KIT1C
60	1	CB1, LUG KIT FOR MAIN BREAKER, INCOMING LUGS FOR 575V	ABB	KIT4

EXCEPT AS NOTED, DIMENSIONS ARE IN INCHES PER ASME Y14.5
X ±.030
XX ±.010
XXX ±.005
ANGLES ±.5°
MATERIAL
COSMETIC CLASS EXCEPT AS NOTED A

CLIMAX
Portable Machining & Welding Systems
CM6200 ROTARY MILL
MULTIPLE VOLTAGES
SIZE D | CAGE CODE 15509 | DWG NO. B00116 | REVISION K
SCALE NONE | SHEET 2 OF 2

FIGURA B-7. HOJA 2 DE MONTAJE INTERIOR DEL PANEL DE CONTROL MR-J3 (N/P B00116)

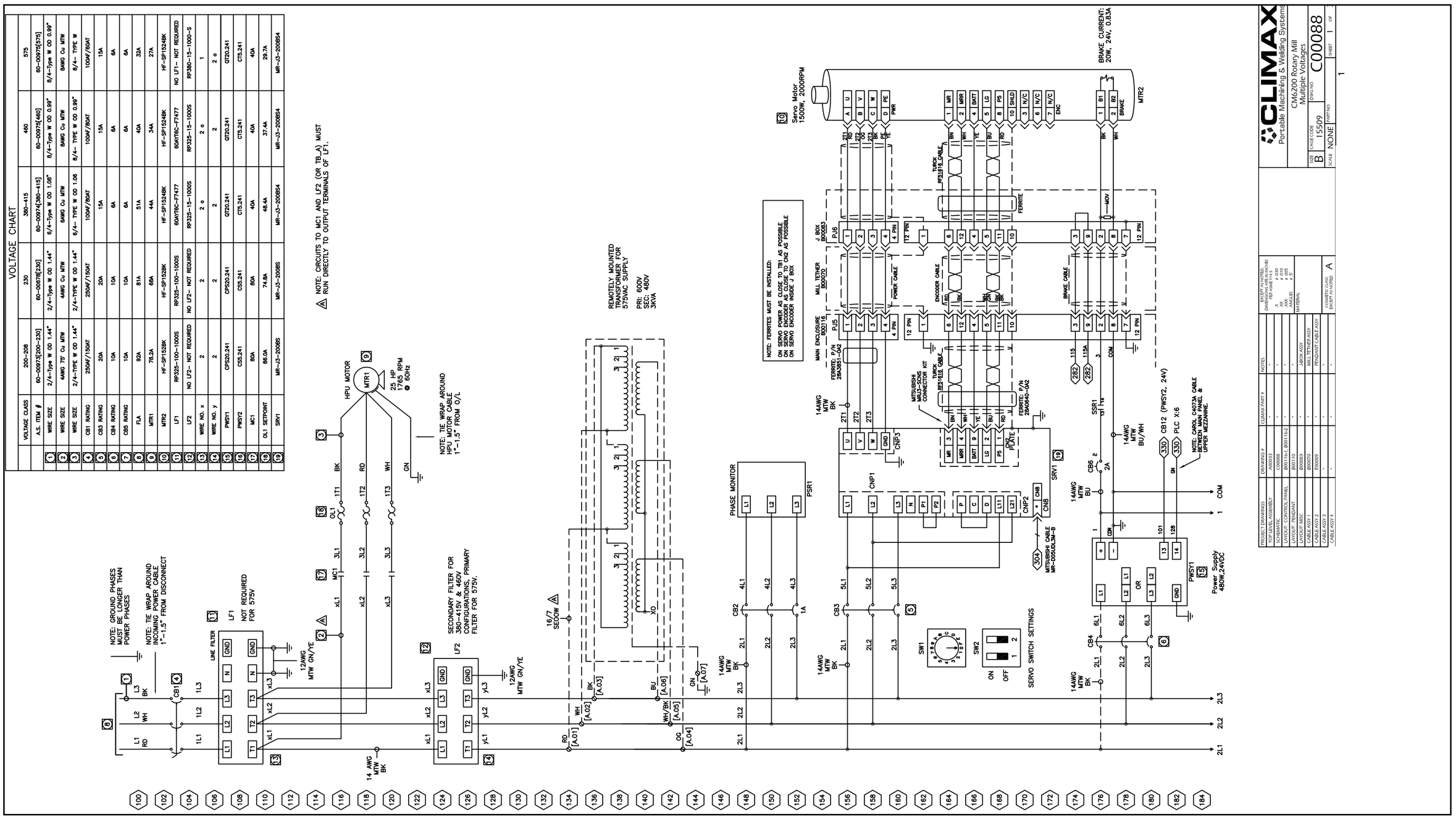

FIGURA B-8. MR-J3 HOJA ESQUEMÁTICA 1 (N/P C00088)

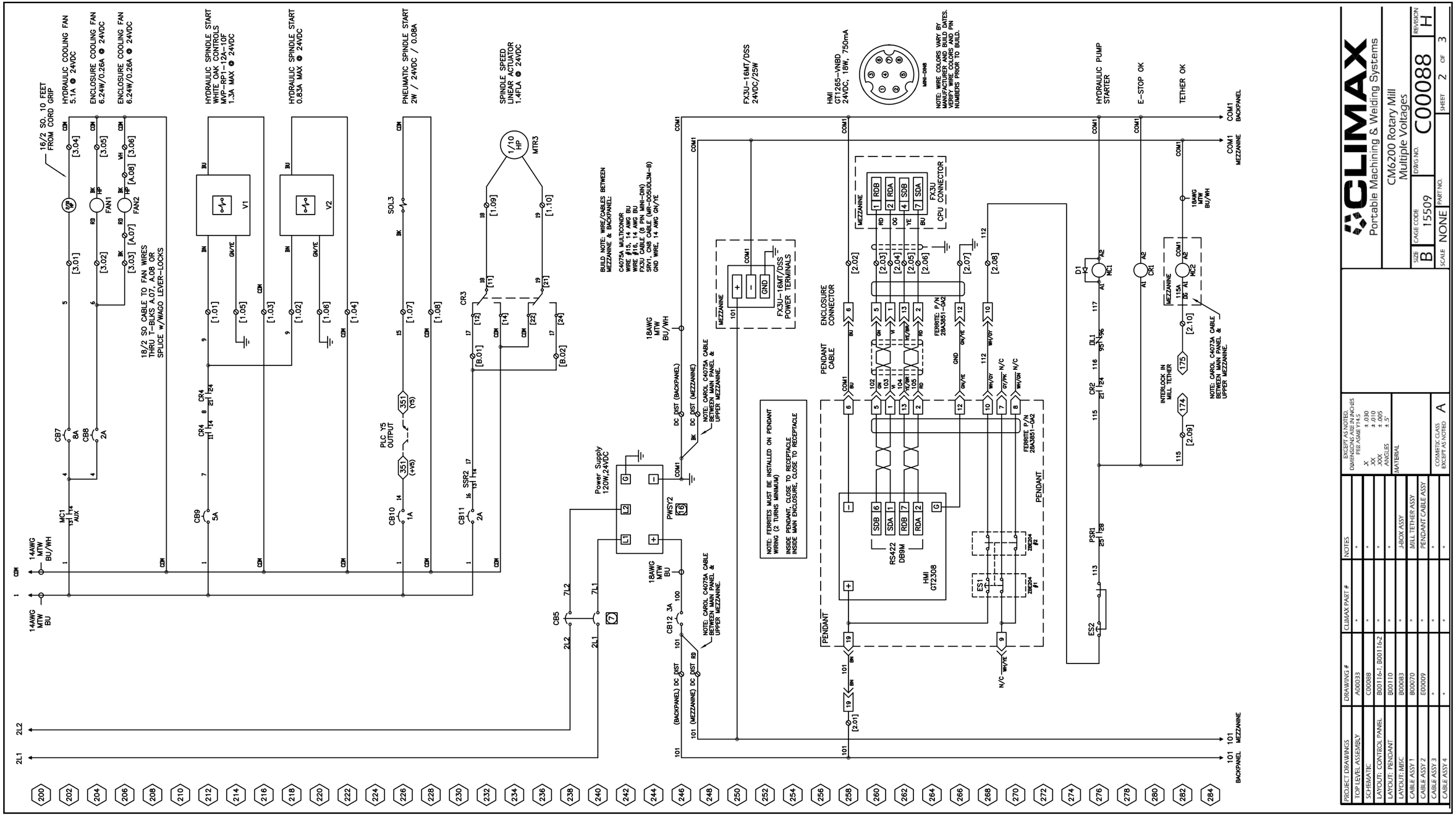

FIGURA B-9. MR-J3 HOJA ESQUEMÁTICA 2 (N/P C00088)

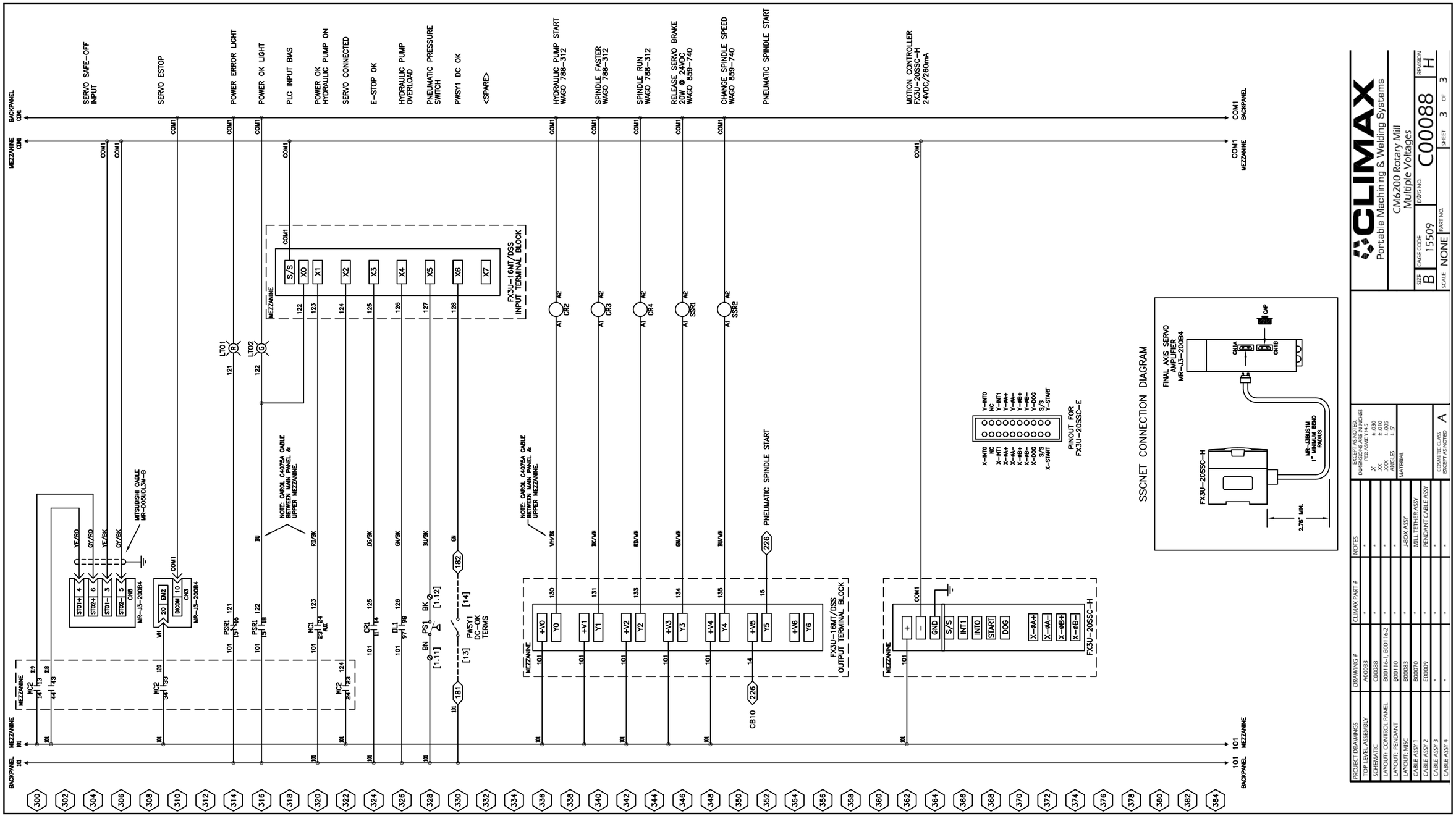

FIGURA B-10. MR-J3 HOJA ESQUEMÁTICA 3 (N/P C00088)

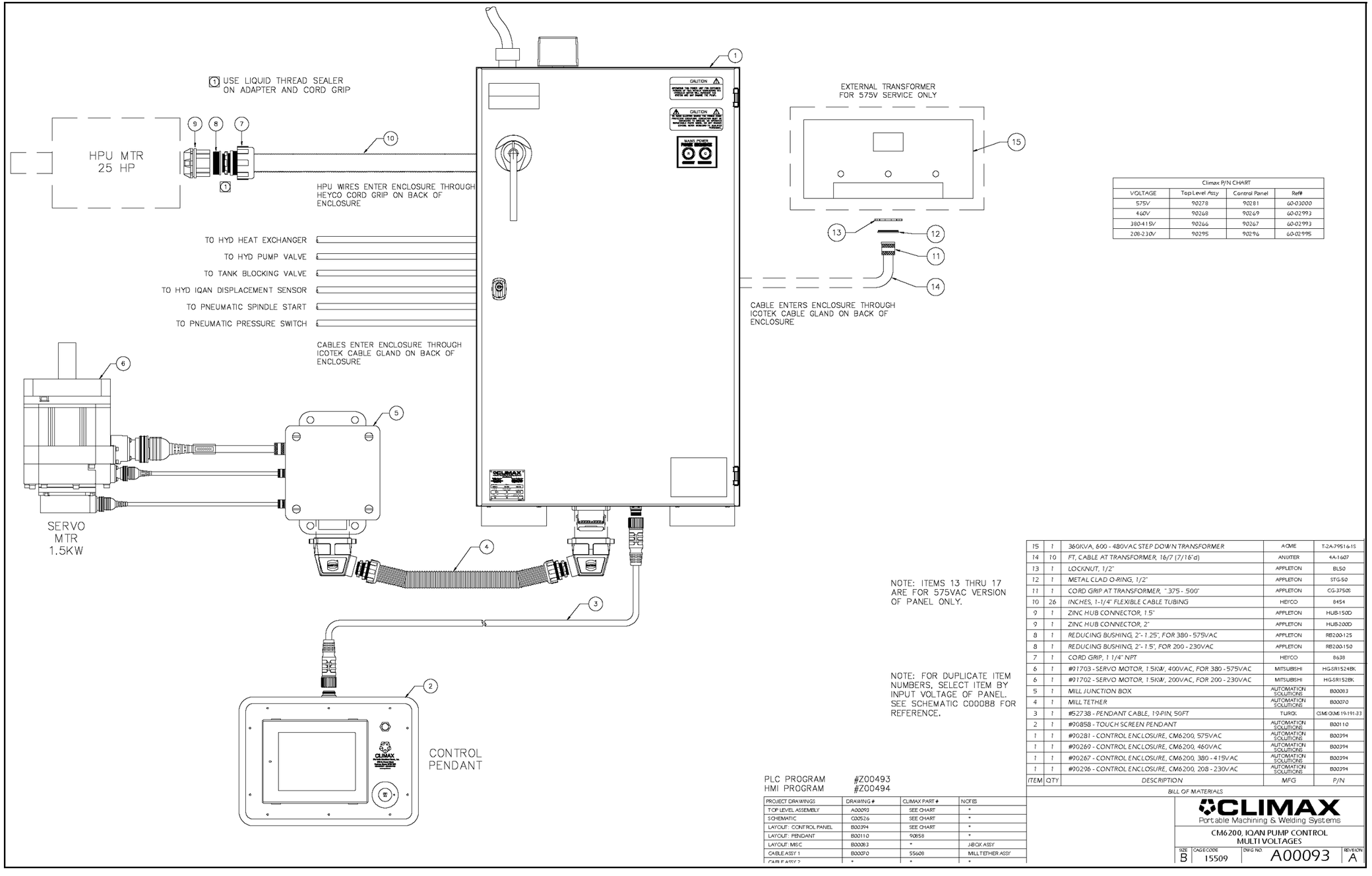

Climax P/N CHART			
VOLTAGE	Top Level Assy	Control Panel	Ref#
575V	90278	90281	60-03000
460V	90268	90269	60-02993
380-415V	90266	90267	60-02993
208-230V	90295	90296	60-02995

NOTE: ITEMS 13 THRU 17 ARE FOR 575VAC VERSION OF PANEL ONLY.

NOTE: FOR DUPLICATE ITEM NUMBERS, SELECT ITEM BY INPUT VOLTAGE OF PANEL. SEE SCHEMATIC C00088 FOR REFERENCE.

ITEM	QTY	DESCRIPTION	MFG	P/N
15	1	360KVA, 600 - 480VAC STEP DOWN TRANSFORMER	ACME	T-2A-79516-1S
14	10	FT, CABLE AT TRANSFORMER, 16/7 (7/16"d)	ANIXTER	4A-1607
13	1	LOCKNUT, 1/2"	APPLETON	BLSO
12	1	METAL CLAD O-RING, 1/2"	APPLETON	STG-50
11	1	CORD GRIP AT TRANSFORMER, .375 - .500"	APPLETON	CG-3750S
10	26	INCHES, 1-1/4" FLEXIBLE CABLE TUBING	HEYCO	8454
9	1	ZINC HUB CONNECTOR, 1.5"	APPLETON	HUB-150D
9	1	ZINC HUB CONNECTOR, 2"	APPLETON	HUB-200D
8	1	REDUCING BUSHING, 2"- 1.25", FOR 380 - 575VAC	APPLETON	RB200-125
8	1	REDUCING BUSHING, 2"- 1.5", FOR 200 - 230VAC	APPLETON	RB200-150
7	1	CORD GRIP, 1 1/4" NPT	HEYCO	8638
6	1	#91703 - SERVO MOTOR, 1.5KW, 400VAC, FOR 380 - 575VAC	MITSUBISHI	HG-SR1524BK
6	1	#91702 - SERVO MOTOR, 1.5KW, 200VAC, FOR 200 - 230VAC	MITSUBISHI	HG-SR152BK
5	1	MILL JUNCTION BOX	AUTOMATION SOLUTIONS	B00083
4	1	MILL TETHER	AUTOMATION SOLUTIONS	B00070
3	1	#52738 - PENDANT CABLE, 19-PIN, 50FT	TUROL	CMSCXM619-191-33
2	1	#90858 - TOUCH SCREEN PENDANT	AUTOMATION SOLUTIONS	B00110
1	1	#90281 - CONTROL ENCLOSURE, CM6200, 575VAC	AUTOMATION SOLUTIONS	B00394
1	1	#90269 - CONTROL ENCLOSURE, CM6200, 460VAC	AUTOMATION SOLUTIONS	B00394
1	1	#90267 - CONTROL ENCLOSURE, CM6200, 380 - 415VAC	AUTOMATION SOLUTIONS	B00394
1	1	#90296 - CONTROL ENCLOSURE, CM6200, 208 - 230VAC	AUTOMATION SOLUTIONS	B00394

BILL OF MATERIALS

PLC PROGRAM #Z00493
HMI PROGRAM #Z00494

PROJECT DRAWINGS	DRAWING #	CLIMAX PART #	NOTES
TOP LEVEL ASSEMBLY	A00093	SEE CHART	*
SCHEMATIC	C00526	SEE CHART	*
LAYOUT: CONTROL PANEL	B00394	SEE CHART	*
LAYOUT: PENDANT	B00110	90858	*
LAYOUT: MISC	B00083	*	J-BOX ASSY
CABLE ASSY 1	B00070	55608	MILL TETHER ASSY
CABLE ASSY 2	*	*	*

CLIMAX Portable Machining & Welding Systems

CM6200, IQAN PUMP CONTROL MULTI VOLTAGES

SIZE B | CAGE CODE 15509 | DWG NO. A00093 | REVISION A

FIGURA B-11. ESQUEMA MR-J4 (N/P A00093)

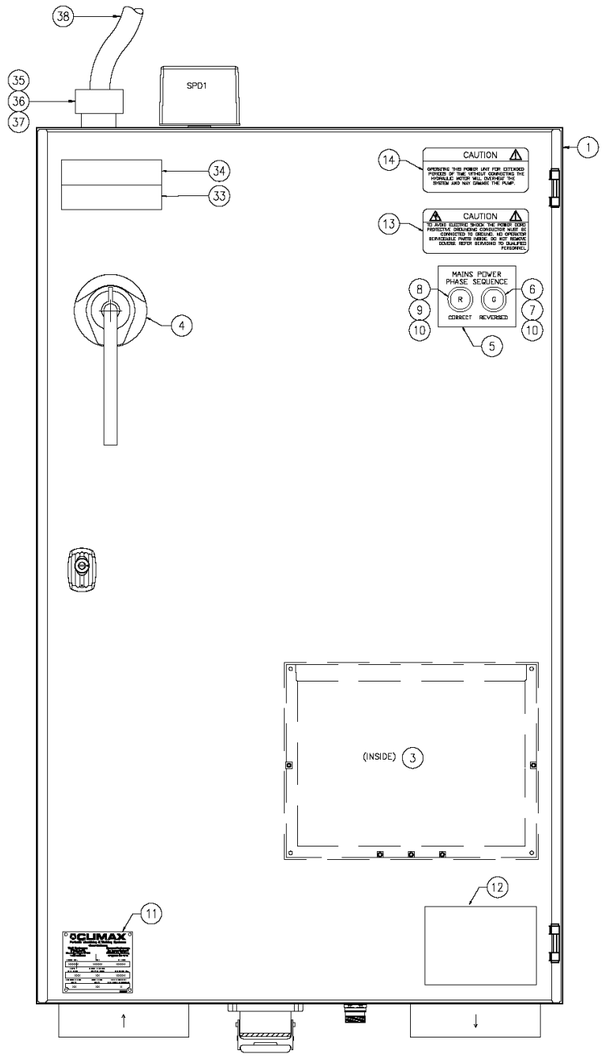

ENCLOSURE FRONT VIEW

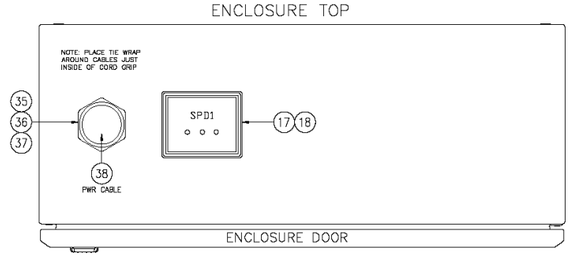

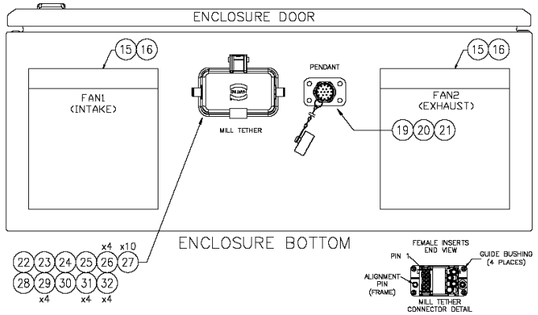

ITEM	QTY	DESCRIPTION	MFG	P/N
		BILL OF MATERIALS		
1	1	ENCLOSURE, 36" X 24" X 12"	SCHNEIDER	NSYS3DC10625
2	1	DOOR RETAINER	SCHNEIDER	NSYAEDRGT
3	1	PRINT POCKET, A4 (INSIDE FRONT DOOR)	SCHNEIDER	NSYDPA4
4	1	MAIN DISCONNECT NEMA4 HANDLE ASSY	SCHNEIDER	9421LH4GRY
5	1	PHASE SEQUENCE LEGEND PLATE	AUTOMATION SOLUTIONS	P00011
6	1	PILOT LIGHT HEAD, GREEN	SCHNEIDER	ZB4BV033
7	1	LIGHT MODULE, GREEN, 24V-120V	SCHNEIDER	ZBVBG3
8	1	PILOT LIGHT HEAD, RED	SCHNEIDER	ZB4BV043
9	1	LIGHT MODULE, RED, 24V-120V	SCHNEIDER	ZBVBG4
10	2	MOUNTING BASE	TELEMECANIQUE	ZB4BZ009
11	1	39125 - NAMEPLATE FOR ELECTRICAL PANELS	AUTOMATION SOLUTIONS	N00002
12	1	ARC FLASH WARNING LABEL	SAFETYSIGN	J5543-JF
13	1	37576 - CAUTION LABEL	CLIMAX	N00042
14	1	15396 - LABEL, CAUTION HYDRAULIC OVERHEAT	CLIMAX	15396
15	2	FANS, 24VDC	ORION	OD1238-24HB
16	2	EXHAUST	HARWA	3142-0148-00-67
17	1	SURGE ARRESTER & POWER CONDITIONER	SCHNEIDER	SDL6A3 650
18	1	NEOPRENE SEALING GASKET, 1/2"	APPLETON	STG-50
19	1	CONNECTOR, PENDANT, 19 PIN, FEMALE	TUROCK	OXFD 19-19-1
20	1	SUPPORT PLATE FOR CXM CMS SUPPORT PLATE	AUTOMATION SOLUTIONS	H00052
21	1	CLOSURE CAP, PENDANT CONNECTOR	TUROCK	OX-CC
22	1	HAN MODULAR CONNECTOR, DUMMY MODULE	HARTING	09 14 000 9950
23	1	HAN MODULAR CONNECTOR, FEMALE INSERT, 4 PINS	HARTING	09 14 004 3141
24	1	HAN MODULAR CONECTOR, FRAME FOR 3 MODULES	HARTING	09 14 010 0303
25	1	HAN MODULAR CONNECTOR, FEMALE INSERT, 12 PIN	HARTING	09 14 012 3101
26	4	HAN MODULAR CONNECTOR, CONTACT, FEMALE AWG 16	HARTING	09 15 000 6201
27	10	HAN MODULAR CONNECTOR, CONTACT, FEMALE AWG 26-22	HARTING	09 15 000 6224
28	1	HAN MODULAR CONNECTOR, HOUSING, BULKHEAD MOUNT	HARTING	09 30 010 0318
29	4	HAN MODULAR CONNECTOR, CONTACT, FEMALE, AWG 14	HARTING	09 32 000 6205
30	1	HAN MODULAR CONNECTOR, FEMALE INSERT, 7 PIN	HARTING	09 14 007 3101
31	4	HAN MODULAR CONNECTOR, CONTACT, FEMALE, AWG 18	HARTING	09 15 000 6202
32	4	GUIDE BUSHINGS	HARTING	09 14 000 9909
33	1	THREE PHASE LABEL - 4.5 X 1.125	MCMASTER	5894T4
34	1	208V LABEL - 4.5 X 1.125	MCMASTER	5894T842
34	1	230V LABEL - 4.5 X 1.125	MCMASTER	5894T832
34	1	380V LABEL - 4.5 X 1.125	MCMASTER	5894T912
34	1	460V LABEL - 4.5 X 1.125	MCMASTER	5894T862
34	1	575V LABEL - 4.5 X 1.125	MCMASTER	5894T922
35	1	CORD GRIP, 1-1/2", FOR 208-240VAC	APPLETON	CG-1281509
35	1	CORD GRIP, 1-1/4", MAIN POWER, FOR 380-460VAC	APPLETON	CG-1001255
36	1	LOCKNUT, 1-1/2", FOR 208-240VAC	APPLETON	EL150
36	1	LOCKNUT, 1-1/4", FOR 380-460VAC	APPLETON	EL125
37	1	SEALING GASKET, 1-1/2", FOR 208-240VAC	APPLETON	STG-150
37	1	SEALING GASKET, 1-1/4", FOR 380-460VAC	APPLETON	STG-125
38	1	FT. PORTABLE POWER CORD, 4/4, TYPE W FOR 208-240VAC	ANIXTER	SB-0404C
38	1	FT. PORTABLE POWER CORD, 8/4, TYPE W FOR 460-575VAC	ANIXTER	SB-0804C

Climax P/N CHART		
VOLTAGE	Control Panel	Ref#
575V	90281	60-03000
380-460V	90267/90269	60-02993
208-230V	90296	60-02995

PROJECT DRAWING:	DRAWING #	CLIMAX PART #	NOTES
TOP LEVEL ASSEMBLY	A00093	*	*
SCHEMATIC	C00526	*	*
LAYOUT: CONTROL PANEL	B00394	SEE CHART	*
LAYOUT: PENDANT	B00110	90858	*
LAYOUT: MISC.	B00083	*	J-BOX ASSY
CABLE ASSY 1	B00070	55608	MILL TETHER ASSY
CABLE ASSY 2	*	*	*
ENCLOSURE TEMPLATE			*

EXCEPT AS NOTED, DIMENSIONS ARE IN INCHES PER ASME Y14.5
.X ± .010
.XX ± .010
.XXX ± .005
ANGLES ± 5°
MATERIAL
COSMETIC CLASS EXCEPT AS NOTED A

ADDITIONAL INFORMATION AND SPECIFICATIONS REQUIRED TO MANUFACTURE THIS PART ARE PROVIDED IN CLIMAX SPEC. P100
DRAWN RG DATE 5/26/18
CHECKED DATE
APPROVED DATE
CAD/CAM STD 4

CLIMAX
Portable Machining & Welding Systems
CM6200 w/ IQAN PUMP CONTROL
MULTI VOLTAGES
SIZE B | CAGE CODE 15509 | DWG NO. B00394 | REVISION A
SCALE 1:1 | P/N SEE CHART | SHEET 1 OF 2

FIGURA B-12. CONJUNTO DEL PANEL DE CONTROL MR-J4 EXTERIOR (N/P B000394)

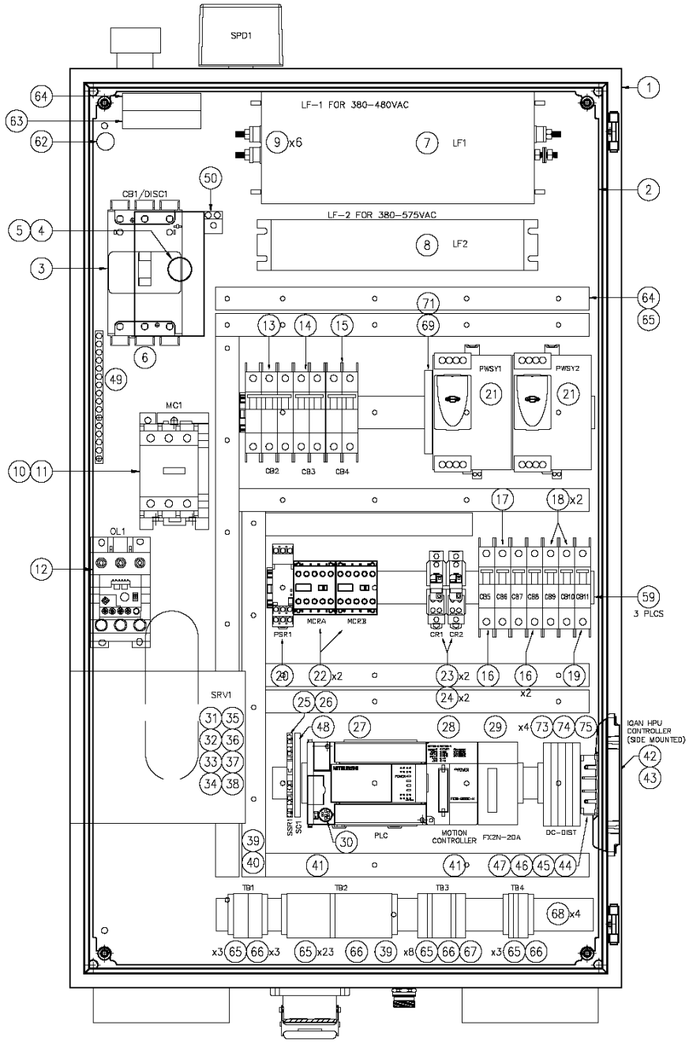

CONTROLS ENCLOSURE
(INSIDE VIEW)

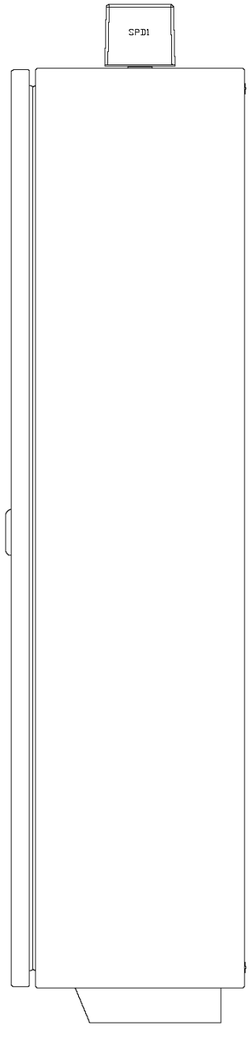

RIGHT SIDE VIEW

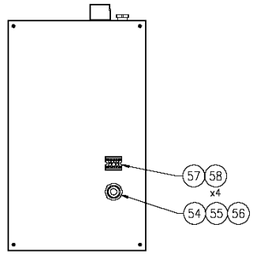

BACK VIEW
(¼ SCALE)

ITEM	QTY	DESCRIPTION	MFG	P/N
BILL OF MATERIALS				
59	1	DINRAIL	MULTIPLE	MULTIPLE
60	1	WIRE DUCT	MULTIPLE	MULTIPLE
61	1	WIRE DUCT COVER	MULTIPLE	MULTIPLE
62	1	PROTECTIVE EARTH LABEL	PANDUIT	PRESS-A-PE
63	1	THREE PHASE LABEL - 2.25 X 5	MCMASTER	5894T6
64	1	208V LABEL - 2.25 X 5	MCMASTER	5894TB43
64	1	230V LABEL - 2.25 X 5	MCMASTER	5894TB33
64	1	380V LABEL - 2.25 X 5	MCMASTER	5894T913
64	1	460V LABEL - 2.25 X 5	MCMASTER	5894TB63
65	37	TERM BLOCK, 5mm, BLUE	WAGO	2002-1204
66	6	TERM BLOCK, 5mm, GRAY	WAGO	2002-1201
67	1	TERM BLOCK, 5mm, GREEN/YELLOW, GROUND	WAGO	2002-1207
68	4	END PLATE, ORN	WAGO	2002-1292
69	5	T-BLOCK, 4 CONDR, GRAY	WAGO	2002-1401
70	1	T-BLOCK, 4 CONDR, GRN/YE	WAGO	2002-1407
71	3	END PLATE, ORANGE	WAGO	2002-1492
72	18	T-BLOCK END STOPS	WAGO	249-116
73	3	JUMPER, 2 PIN	WAGO	2002-402
74	1	JUMPER, 3 PIN	WAGO	2002-403
75	1	JUMPER, 4 PIN	WAGO	2002-404
76	2	1/4-20 x 3/4" GND BOLT	MCMASTER	91309A540
77	4	1/4-20 KEPS NUT	MCMASTER	90675A029
78	4	1/4-20 HEX NUT	MCMASTER	90473A029

ITEM	QTY	DESCRIPTION	MFG	P/N
BILL OF MATERIALS				
1	1	ENCLOSURE, 36" X 24" X 12"	SCHNEIDER	NSYS3DC10625
2	1	BACK PANEL	AUTOMATION SOLUTIONS	H96603
3	1	CB1: CIRCUIT BREAKER, 35A, 3 POLE, FOR 575VAC	SCHNEIDER	BDL36035
3	1	CB1: CIRCUIT BREAKER, 60A, 3 POLE, FOR 380-460VAC	SCHNEIDER	BDL36060
3	1	CB1: CIRCUIT BREAKER, 90A, 3 POLE, FOR 230-240VAC	SCHNEIDER	BDL36090
3	1	CB1: CIRCUIT BREAKER, 110A, 3 POLE, FOR 208VAC	SCHNEIDER	BDL36110
4	1	DISC1: MAIN DISCONNECT OPERATING MECHANISM	SCHNEIDER	9421LB7
5	1	DISC1: DISCONNECT SHAFT	SCHNEIDER	9421LS8
6	1	DISTRIBUTION SET, 3/6, 14-6AWG	SCHNEIDER	PDC6BD6
7	1	LF1, LINE FILTER, 60A, FOR 380 - 460VAC	CORCOM	60AVT6GF7477
7	1	LF1, LINE FILTER, 75A FOR 200 - 230VAC	SCHAFFNER	FN258L-75-34
7A	1	LF1, MOUNTING KIT, FOR 380 - 460VAC	CORCOM	AA465
8	1	LF2, LINE FILTER, 15A, FOR 380 - 460VAC	SCHAFFNER	FN258L-16-29
8	1	LF2, LINE FILTER, 15A, FOR 575VAC	SCHAFFNER	FN258L-16-29
9	6	TERMINAL INSULATORS, BLACK	VTE	800NSV14
10	1	MC1: CONTACTOR, 80A 24VDC, FOR 208-240VAC	SCHNEIDER	LC1D80BD
10	1	MC1: CONTACTOR, 40A 24VDC, FOR 380-575VAC	SCHNEIDER	LC1D40BD
11	1	MC1: AUX CONTACTS	SCHNEIDER	LADN20
12	1	OL1: ELECTRONIC OVERLOAD RELAY	SCHNEIDER	LR9D1105
13	1	CB2: CIRCUIT BREAKER, 1A, 3 POLE	SCHNEIDER	MGN61323
14	1	CB3: CIRCUIT BREAKER, 15A, 3 POLE, FOR 380-575VAC	SCHNEIDER	MGN61331
14	1	CB3: CIRCUIT BREAKER, 20A, 3 POLE, FOR 200-230VAC	SCHNEIDER	60180
15	1	CB4: CIRCUIT BREAKER, 10A, 2 POLE, FOR 460VAC	SCHNEIDER	MGN61319
16	3	CB5, CB7, CB8: CIRCUIT BREAKER, 2A, 1 POLE	SCHNEIDER	60103
17	1	CB6, CIRCUIT BREAKER, 8A, 1 POLE	SCHNEIDER	60109
18	2	CB9, CB10: CIRCUIT BREAKER, 10A, 1 POLE	SCHNEIDER	60110
19	1	CB11, CIRCUIT BREAKER, 1A, 1 POLE	SCHNEIDER	60101
20	1	PSR1: PHASE SEQUENCE RELAY	SCHNEIDER	RM22TG20
21	2	POWER SUPPLY, 24VDC, 10A	SCHNEIDER	ABL8RPS24100
22	2	MCRA, MCRB: RELAY, 3NO, 1NC, 24VDC COIL	SCHNEIDER	CA3KN40BD
23	2	CR1, CR2: RELAY, 1 C/O	SCHNEIDER	RPM12BD
24	2	CR1, CR2: RELAY SOCKET	SCHNEIDER	RPZF1
25	1	SSR1: RELAY BASE	SCHNEIDER	SSL2BA1
26	1	SSR1: SOLID STATE RELAY	SCHNEIDER	SSL1D03BD
27	1	PSR1: PHASE SEQUENCE RELAY	SCHNEIDER	RM22TG20
28	1	FX3USSCNENT 2 AXIS POSITIONING MODULE	MITSUBISHI	FX3U-2SSS-CH
29	1	DIGITAL TO ANALOG MODULE	MITSUBISHI	FX2N-2DA
30	1	8 PIN MINI-DIN 8 CABLE	L-COM	DX238MM-1S
31	1	SERVO AMP, 2KW, 200V FOR 200 - 230VAC	MITSUBISHI	MR-J4-200B4-RU
32	1	SERVO AMP, 2KW, 400V FOR 380 - 575VAC	MITSUBISHI	MR-J4-200B4-RU
33	1	SSCNET III CABLE, 1 METER	MITSUBISHI	MR-J3BUS1M
34	1	ENCODER CONNECTOR KIT	MITSUBISHI	MR-J3SCNS
35	3	FT, ENCODER CABLE	TUROK	RPS1616
36	1	SERVO SAFETY CABLE PIGTAIL	MITSUBISHI	MR-D05UDL3M-B
37	1	CN3 CONNECTOR	3M	10326-52F0-008
38	1	CN3 CONNECTOR	3M	10120-3000PE
39	1	LARGE FERRITE, SPLIT/SNAP-ON, 260 OHMS 100MHz	LAIRD	28A3851-0A2
40	1	SMALL FERRITE, SPLIT/SNAP-ON, 240 OHMS 100MHZ	LAIRD	28A0640-0A2
41	2	FERRITE, 122 OHMS 100MHz	LAIRD	28B0870-100
42	1	IQAN HPU CONTROLLER	PARKER	MC41
43	1	IQAN HPU CONTROLLER ID TAG	PARKER	2008S116
44	1	DUAL ROW RT ANGLE HEADER	MOLEX	34822-0013
45	1	CONNECTOR COVER	MOLEX	34506-0003
46	23	TERMINAL	MOLEX	33467-0024
47	2	TERMINAL, 14AWG	Yazaki	7116-4152-02
48	1	SIGNAL CONDITIONER	WAGO	857-412
52	1	GROUND BAR	EATON	GBK14
53	1	GROUND LUG	MULTIPLE	MULTIPLE
54	1	PVC CONNECTOR, 1-1/4", BLACK	HEYCO	8638
55	1	LOCKNUT, 1-1/4"	APPLETON	EL125
56	1	SEALING GASKET, 1-1/4"	APPLETON	STG125
57	1	CABLE GLAND	ICOTEK	KEL-DPZ-B17 GY
58	4	10-32 x5/8" BHCS, GLAND MOUNTINGSCREW	MCMASTER	92949A247

PLC PROGRAM #Z00493
HMI PROGRAM #Z00494

Climax P/N CHART		
VOLTAGE	Control Panel	Ref#
575V	90281	60-03000
380-460V	90267/90269	60-02993
208-230V	90296	60-02995

PROJECT DRAWINGS	DRAWING #	CLIMAX PART #	NOTES
TOP LEVEL ASSEMBLY	A00093	*	*
SCHEMATIC	C00526	*	*
LAYOUT: CONTROL PANEL	B00394	SEE CHART	*
LAYOUT: PENDANT	B00110	90858	*
LAYOUT: MISC	B00083	*	J-BOX ASSY
CABLE ASSY 1	B00070	55608	MILL TETHER ASSY
CABLE ASSY 2	*	*	*

EXCEPT AS NOTED DIMENSIONS ARE IN INCHES PER ASME Y14.5
.X ±.020
.XX ±.010
.XXX ±.005
ANGLES ±.5°
MATERIAL

ADDITIONAL INFORMATION AND SPECIFICATIONS REQUIRED TO MANUFACTURE THIS PART ARE PROVIDED IN CLIMAX SPEC. P100
DRAWN RG DATE 5/26/18
CHECKED DATE
APPROVED DATE

CLIMAX
Portable Machining & Welding Systems
CM6200 w/ IQAN PUMP CONTROL
MULTI VOLTAGES
SIZE B | CAGE CODE 15509 | DWG NO. B00394 | REVISION A

FIGURA B-13. CONJUNTO DEL PANEL DE CONTROL MR-J4 INTERIOR (N/P B00394)

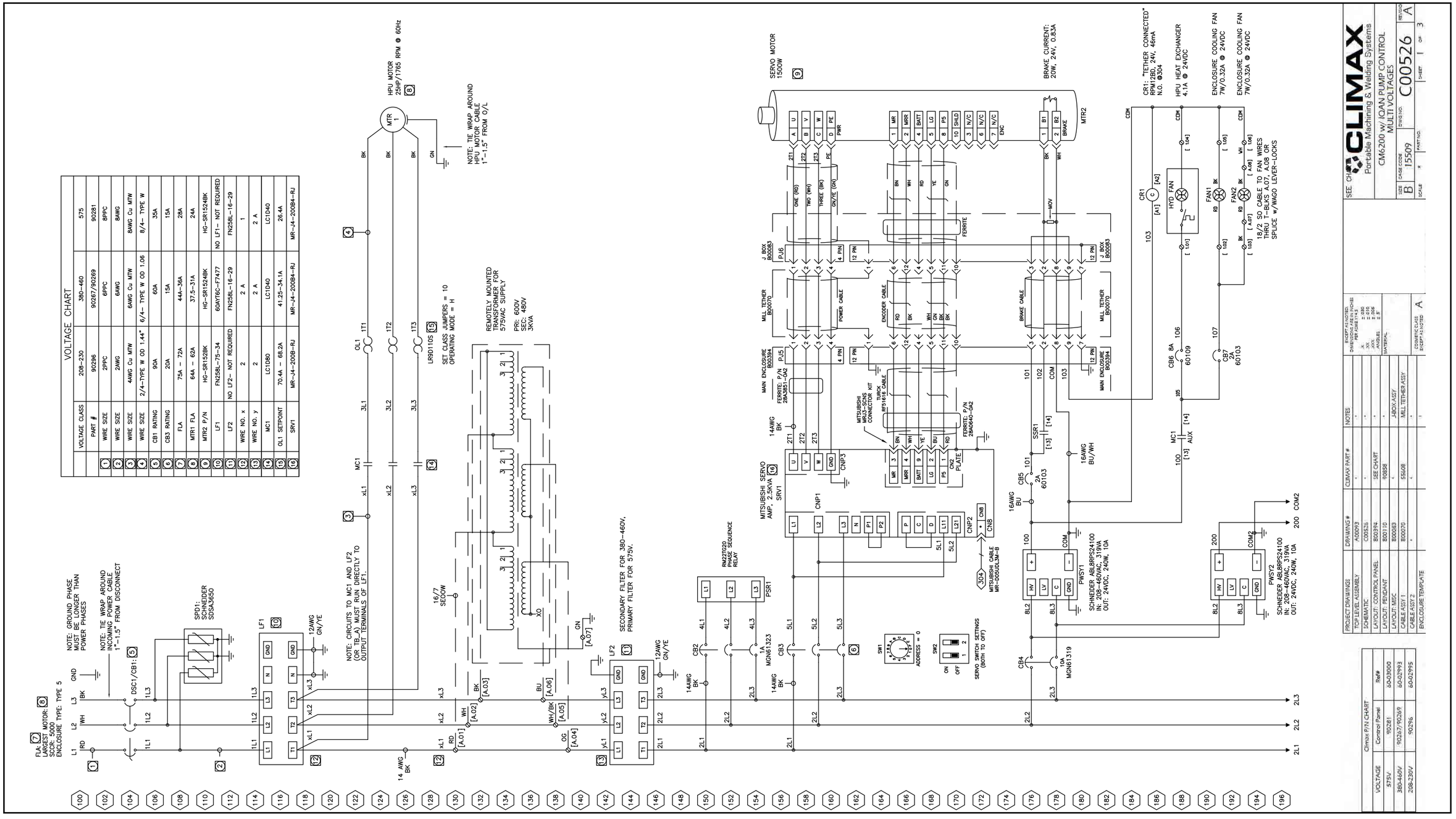

FIGURA B-14. MR-J4 HOJA ESQUEMÁTICA 1 (N/P C00526)

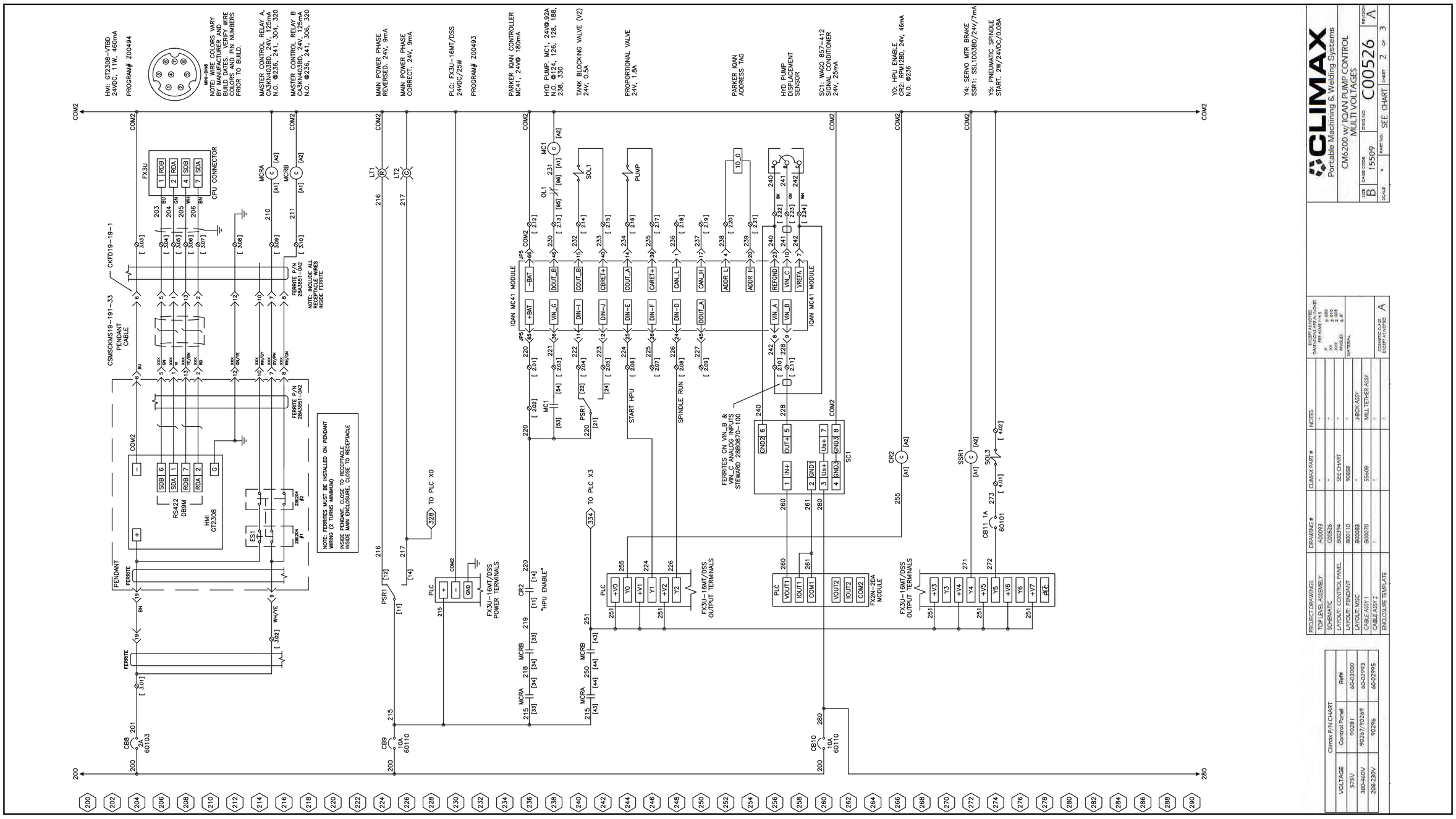

FIGURA B-15. MR-J4 HOJA ESQUEMÁTICA 2 (N/P C00526)

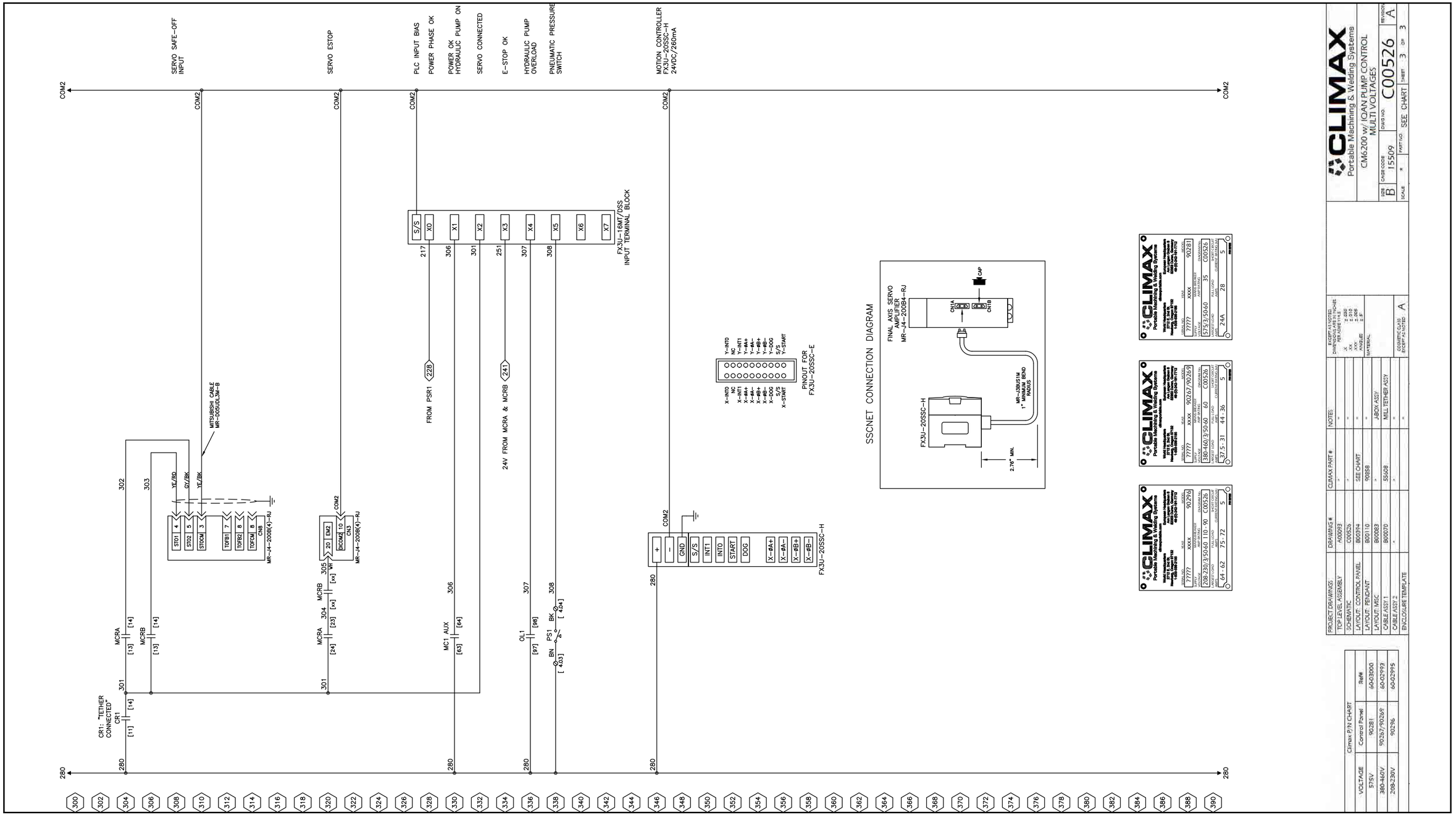

Climax P/N CHART		
VOLTAGE	Control Panel	Ref#
575V	90281	60-03000
380-460V	90267/90269	60-02993
208-230V	90296	60-02995

NOTES:		CLIMAX PART #	DRAWING #	PROJECT DRAWINGS:
-	-	-	A00093	TOP LEVEL ASSEMBLY
-	-	-	C00526	SCHEMATIC
-	-	-	B60394	LAYOUT: CONTROL PANEL
-	-	-	B60110	LAYOUT: FB/SHAFT
-	-	-	B60083	LAYOUT: MISC
-	-	-	B60070	CABLE ASSY 1
-	-	-		CABLE ASSY 2
JBOX ASSY				ENCLOSURE TEMPLATE
MILL TETHER ASSY				

DIMENSIONS ARE IN INCHES	EXCEPT AS NOTED
TOLERANCES:	
.X	± .030
.XX	± .010
.XXX	± .005
ANGLES	± .5°
MATERIAL:	
COSMETIC CASE EXCEPT AS NOTED	A

CLIMAX
Portable Machining & Welding Systems

CM6200 w/ IQAN PUMP CONTROL
MULTI VOLTAGES

SIZE	CAGE CODE	DWG NO	REVISION
B	15509	C00526	A

SCALE: * PART NO SEE CHART 1 SHEET 3 OF 3

FIGURA B-16. MR-J4 HOJA ESQUEMÁTICA 3 (N/P C00526)

Esta página se ha dejado en blanco a propósito

APÉNDICE C FDS [FICHAS DE DATOS DE SEGURIDAD]

Póngase en contacto con CLIMAX para obtener la lista actual de hojas de datos de seguridad.

Esta página se ha dejado en blanco a propósito

APÉNDICE D MR-J4 SERVO AMPLIFIER MANUAL

Para cualquier problema con la caja de conexiones del servomotor MR-J4, consulte las páginas siguientes.

Esta página se ha dejado en blanco a propósito

1 TROUBLESHOOTING FOR SERVO AMPLIFIER (DRIVE UNIT)

Point

- As soon as an alarm occurs, turn SON (Servo-on) off and interrupt the power.
- [AL. 37 Parameter error] and warnings (except [AL. F0 Tough drive warning]) are not recorded in the alarm history.
- [AL. 8D.1 CC-Link IE communication error 1] and [AL. 8D.2 CC-Link IE communication error 2] are not recorded in the alarm history. For MR-J4-_GF_(-RJ), these alarms are recorded by setting [Pr. PN06] to "_ _ _ 1".

When an error occurs during operation, the corresponding alarm or warning is displayed.
When an alarm occurs, ALM will turn off. Refer to the following and take the appropriate action.
☞ Page 30 Remedies for alarms
When an warning is displayed, refer to the following and take the appropriate action.
☞ Page 103 Remedies for warnings

1.1 Explanation for the lists

No./Name/Detail No./Detail name

Indicates each No./Name/Detail No./Detail name of alarms or warnings.

Stop method

For the alarms and warnings in which "SD" is written in the stop method column, the servo motor stops with the dynamic brake after forced stop deceleration. For the alarms and warnings in which "DB" or "EDB" is written in the stop method column, the servo motor stops with the dynamic brake without forced stop deceleration.

Alarm deactivation

After its cause has been removed, the alarm can be deactivated in any of the methods marked ○ in the alarm deactivation column. Warnings are automatically canceled after the cause of occurrence is removed. Alarms are deactivated with alarm reset, CPU reset, or cycling the power.

■MR-J4-_A_(-RJ)/MR-J4-DU_A_(-RJ)

Alarm deactivation	Explanation
Alarm reset	1. Turning on RES (Reset) with input device 2. Pushing the "SET" button while the display of the servo amplifier is the current alarm display status 3. Click "Occurring Alarm Reset" in the "Alarm Display" window of MR Configurator2
Cycling the power	Turning the power off and then turning it on again.

■MR-J4-_B_(-RJ010)/MR-J4W_-_B/MR-J4-DU_B_(-RJ)/MR-J4-_GF_(-RJ)

Alarm deactivation	Explanation
Alarm reset	1. Reset command from controller 2. Click "Occurring Alarm Reset" in the "Alarm Display" window of MR Configurator2
CPU reset	Resetting the controller itself
Cycling the power	Turning the power off and then turning it on again.

Processing system (only for MR-J4W_-_B_)

Processing system of alarms is as follows.
Each axis: Alarm is detected for each axis.
Common: Alarm is detected as the whole servo amplifier.

Stop system (only for MR-J4W_-_B_)

This means target axis to stop when the alarm occurs.

Each axis: Only alarming axis will stop.

All axes: All axes will stop.

Alarm code (only MR-J4-_A_(-RJ)/MR-J4-DU_A_(-RJ))

To output alarm codes, set [Pr. PD34] to "_ _ _ 1" when using an MR-J4-_A_(-RJ)/MR-J4-DU_A_(-RJ). Alarm codes are outputted by on/off of bit 0 to bit 2. Warnings ([AL. 90] to [AL. F3]) do not have alarm codes. The alarm codes in the following table will be outputted when they occur. The alarm codes will not be outputted in normal condition.

When using an MR-D01 extension IO unit, you can output alarm codes by setting [Pr. Po12] to "_ _ _ 1". Alarm codes are outputted by on/off of bit 0 to bit 3.

1.2 Alarm list

Alarm		Detail		Stop method *2*3	Alarm deactivation			Processing system *9	Stop system *9	Alarm code *8			
No.	Name	No.	Name		Alarm reset	CPU reset	Cycling the power			ACD3 (Bit 3)	ACD2 (Bit 2)	ACD1 (Bit 1)	ACD0 (Bit 0)
10	Undervoltage	10.1	Voltage drop in the control circuit power	EDB	○	○	○	Common	All axes	0	0	1	0
		10.2	Voltage drop in the main circuit power	SD	○	○	○	Common	All axes				
11	Switch setting error	11.1	Axis number setting error/ Station number setting error	DB	—	—	○	Common	All axes	—	—	—	—
		11.2	Disabling control axis setting error	DB	—	—	○	Common	All axes	—	—	—	—
12	Memory error 1 (RAM)	12.1	RAM error 1	DB	—	—	○	Common	All axes	0	0	0	0
		12.2	RAM error 2	DB	—	—	○	Common	All axes				
		12.3	RAM error 3	DB	—	—	○	Common	All axes				
		12.4	RAM error 4	DB	—	—	○	Common	All axes				
		12.5	RAM error 5	DB	—	—	○	Common	All axes				
		12.6	RAM error 6	DB	—	—	○	—	—	—	—	—	—
13	Clock error	13.1	Clock error 1	DB	—	—	○	Common	All axes	0	0	0	0
		13.2	Clock error 2	DB	—	—	○	Common	All axes				
		13.3	Clock error 3	DB	—	—	○	—	—	—	—	—	—
14	Control process error	14.1	Control process error 1	DB	—	—	○	Common	All axes	0	0	0	0
		14.2	Control process error 2	DB	—	—	○	Common	All axes				
		14.3	Control process error 3	DB	—	—	○	Common	All axes				
		14.4	Control process error 4	DB	—	—	○	Common	All axes				
		14.5	Control process error 5	DB	—	—	○	Common	All axes				
		14.6	Control process error 6	DB	—	—	○	Common	All axes				
		14.7	Control process error 7	DB	—	—	○	Common	All axes				
		14.8	Control process error 8	DB	—	—	○	Common	All axes				
		14.9	Control process error 9	DB	—	—	○	Common	All axes				
		14.A	Control process error 10	DB	—	—	○	Common	All axes				
		14.B	Control process error 11	DB	—	—	○	—	—	—	—	—	—
		14.C	Control process error 12	DB	—	—	○	—	—	—	—	—	—
		14.D	Control process error 13	DB	—	—	○	—	—	—	—	—	—

Alarm		Detail		Stop method *2*3	Alarm deactivation			Processing system *9	Stop system *9	Alarm code *8			
No.	Name	No.	Name		Alarm reset	CPU reset	Cycling the power			ACD3 (Bit 3)	ACD2 (Bit 2)	ACD1 (Bit 1)	ACD0 (Bit 0)
15	Memory error 2 (EEP-ROM)	15.1	EEP-ROM error at power on	DB	—	—	○	Common	All axes	0	0	0	0
		15.2	EEP-ROM error during operation	DB	—	—	○	Common	All axes				
		15.4	Home position information read error	DB	—	—	○	—	—				

Alarm		Detail		Stop method *2*3	Alarm deactivation			Processing system *3	Stop system *9	Alarm code *8			
No.	Name	No.	Name		Alarm reset	CPU reset	Cycling the power			ACD3 (Bit 3)	ACD2 (Bit 2)	ACD1 (Bit 1)	ACD0 (Bit 0)
16	Encoder initial communication error 1	16.1	Encoder initial communication - Receive data error 1	DB	—	—	○	Each axis	Each axis	0	1	1	0
		16.2	Encoder initial communication - Receive data error 2	DB	—	—	○	Each axis	Each axis				
		16.3	Encoder initial communication - Receive data error 3	DB	—	—	○	Each axis	Each axis				
		16.4	Encoder initial communication - Encoder malfunction *6	DB	—	—	○	Each axis	Each axis				
		16.5	Encoder initial communication - Transmission data error 1	DB	—	—	○	Each axis	Each axis				
		16.6	Encoder initial communication - Transmission data error 2	DB	—	—	○	Each axis	Each axis				
		16.7	Encoder initial communication - Transmission data error 3	DB	—	—	○	Each axis	Each axis				
		16.8	Encoder initial communication - Incompatible encoder *6	DB	—	—	○	Each axis	Each axis				
		16.A	Encoder initial communication - Process error 1	DB	—	—	○	Each axis	Each axis				
		16.B	Encoder initial communication - Process error 2	DB	—	—	○	Each axis	Each axis				
		16.C	Encoder initial communication - Process error 3	DB	—	—	○	Each axis	Each axis				
		16.D	Encoder initial communication - Process error 4	DB	—	—	○	Each axis	Each axis				
		16.E	Encoder initial communication - Process error 5	DB	—	—	○	Each axis	Each axis				
		16.F	Encoder initial communication - Process error 6	DB	—	—	○	Each axis	Each axis				

Alarm		Detail		Stop method *2*3	Alarm deactivation			Processing system *5	Stop system *5	Alarm code *8			
No.	Name	No.	Name		Alarm reset	CPU reset	Cycling the power			ACD3 (Bit 3)	ACD2 (Bit 2)	ACD1 (Bit 1)	ACD0 (Bit 0)
17	Board error	17.1	Board error 1	DB	—	—	○	Common	All axes	0	0	0	0
		17.3	Board error 2	DB	—	—	○	Common	All axes				
		17.4	Board error 3	DB	—	—	○	Common	All axes				
		17.5	Board error 4	DB	—	—	○	Common	All axes				
		17.6	Board error 5	DB	—	—	○	Common	All axes				
		17.7	Board error 7	DB	—	—	○	—	—				
		17.8	Board error 6 *6	EDB	—	—	○	Common	All axes				
		17.9	Board error 8	DB	—	—	○	—	—	—	—	—	—
19	Memory error 3 (Flash-ROM)	19.1	Flash-ROM error 1	DB	—	—	○	Common	All axes	0	0	0	0
		19.2	Flash-ROM error 2	DB	—	—	○	Common	All axes				
		19.3	Flash-ROM error 3	DB	—	—	○	—	—	—	—	—	—
1A	Servo motor combination error	1A.1	Servo motor combination error 1	DB	—	—	○	Each axis	Each axis	0	1	1	0
		1A.2	Servo motor control mode combination error	DB	—	—	○	Each axis	Each axis				
		1A.4	Servo motor combination error 2	DB	—	—	○	Each axis	Each axis				
1B	Converter error	1B.1	Converter unit error	DB	—	—	○	—	—	0	0	1	0
1E	Encoder initial communication error 2	1E.1	Encoder malfunction	DB	—	—	○	Each axis	Each axis	0	1	1	0
		1E.2	Load-side encoder malfunction	DB	—	—	○	Each axis	Each axis				
1F	Encoder initial communication error 3	1F.1	Incompatible encoder	DB	—	—	○	Each axis	Each axis	0	1	1	0
		1F.2	Incompatible load-side encoder	DB	—	—	○	Each axis	Each axis				

Alarm		Detail		Stop method *2*3	Alarm deactivation			Processing system *2	Stop system *2	Alarm code *3			
No.	Name	No.	Name		Alarm reset	CPU reset	Cycling the power			ACD3 (Bit 3)	ACD2 (Bit 2)	ACD1 (Bit 1)	ACD0 (Bit 0)
20	Encoder normal communication error 1	20.1	Encoder normal communication - Receive data error 1	EDB	—	—	○	Each axis	Each axis	0	1	1	0
		20.2	Encoder normal communication - Receive data error 2	EDB	—	—	○	Each axis	Each axis				
		20.3	Encoder normal communication - Receive data error 3	EDB	—	—	○	Each axis	Each axis				
		20.5	Encoder normal communication - Transmission data error 1	EDB	—	—	○	Each axis	Each axis				
		20.6	Encoder normal communication - Transmission data error 2	EDB	—	—	○	Each axis	Each axis				
		20.7	Encoder normal communication - Transmission data error 3	EDB	—	—	○	Each axis	Each axis				
		20.9	Encoder normal communication - Receive data error 4	EDB	—	—	○	Each axis	Each axis				
		20.A	Encoder normal communication - Receive data error 5	EDB	—	—	○	Each axis	Each axis				
21	Encoder normal communication error 2	21.1	Encoder data error 1	EDB	—	—	○	Each axis	Each axis	0	1	1	0
		21.2	Encoder data update error	EDB	—	—	○	Each axis	Each axis				
		21.3	Encoder data waveform error	EDB	—	—	○	Each axis	Each axis				
		21.4	Encoder non-signal error	EDB	—	—	○	Each axis	Each axis				
		21.5	Encoder hardware error 1	EDB	—	—	○	Each axis	Each axis				
		21.6	Encoder hardware error 2	EDB	—	—	○	Each axis	Each axis				
		21.9	Encoder data error 2	EDB	—	—	○	Each axis	Each axis				
24	Main circuit error	24.1	Ground fault detected by hardware detection circuit	DB	—	—	○	Each axis	All axes	1	1	0	0
		24.2	Ground fault detected by software detection function	DB	○	○	○	Each axis	All axes				

Alarm		Detail		Stop method *2*3	Alarm deactivation			Processing system *9	Stop system *9	Alarm code *8			
No.	Name	No.	Name		Alarm reset	CPU reset	Cycling the power			ACD3 (Bit 3)	ACD2 (Bit 2)	ACD1 (Bit 1)	ACD0 (Bit 0)
25	Absolute position erased	25.1	Servo motor encoder - Absolute position erased	DB	—	—	○	Each axis	Each axis	1	1	1	0
		25.2	Scale measurement encoder - Absolute position erased	DB	—	—	○	Each axis	Each axis				
27	Initial magnetic pole detection error	27.1	Initial magnetic pole detection - Abnormal termination	DB	○	—	○	Each axis	Each axis	1	1	1	0
		27.2	Initial magnetic pole detection - Time out error	DB	○	—	○	Each axis	Each axis				
		27.3	Initial magnetic pole detection - Limit switch error	DB	○	—	○	Each axis	Each axis				
		27.4	Initial magnetic pole detection - Estimated error	DB	○	—	○	Each axis	Each axis				
		27.5	Initial magnetic pole detection - Position deviation error	DB	○	—	○	Each axis	Each axis				
		27.6	Initial magnetic pole detection - Speed deviation error	DB	○	—	○	Each axis	Each axis				
		27.7	Initial magnetic pole detection - Current error	DB	○	—	○	Each axis	Each axis				
28	Linear encoder error 2	28.1	Linear encoder - Environment error	EDB	—	—	○	Each axis	Each axis	0	1	1	0
2A	Linear encoder error 1	2A.1	Linear encoder error 1-1	EDB	—	—	○	Each axis	Each axis	0	1	1	0
		2A.2	Linear encoder error 1-2	EDB	—	—	○	Each axis	Each axis				
		2A.3	Linear encoder error 1-3	EDB	—	—	○	Each axis	Each axis				
		2A.4	Linear encoder error 1-4	EDB	—	—	○	Each axis	Each axis				
		2A.5	Linear encoder error 1-5	EDB	—	—	○	Each axis	Each axis				
		2A.6	Linear encoder error 1-6	EDB	—	—	○	Each axis	Each axis				
		2A.7	Linear encoder error 1-7	EDB	—	—	○	Each axis	Each axis				
		2A.8	Linear encoder error 1-8	EDB	—	—	○	Each axis	Each axis				
2B	Encoder counter error	2B.1	Encoder counter error 1	EDB	—	—	○	Each axis	Each axis	1	1	1	0
		2B.2	Encoder counter error 2	EDB	—	—	○	Each axis	Each axis				

Alarm		Detail		Stop method *2*3	Alarm deactivation			Processing system *9	Stop system *9	Alarm code *8			
No.	Name	No.	Name		Alarm reset	CPU reset	Cycling the power			ACD3 (Bit 3)	ACD2 (Bit 2)	ACD1 (Bit 1)	ACD0 (Bit 0)
30	Regenerative error	30.1	Regeneration heat error	DB	○*1	○*1	○*1	Common	All axes	0	0	0	1
		30.2	Regeneration signal error	DB	○*1	○*1	○*1	Common	All axes				
		30.3	Regeneration feedback signal error	DB	○*1	○*1	○*1	Common	All axes				
31	Overspeed	31.1	Abnormal motor speed	SD	○	○	○	Each axis	Each axis	0	1	0	1
32	Overcurrent	32.1	Overcurrent detected at hardware detection circuit (during operation)	DB	—	—	○	Each axis	All axes	0	1	0	0
		32.2	Overcurrent detected at software detection function (during operation)	DB	○	○	○	Each axis	All axes				
		32.3	Overcurrent detected at hardware detection circuit (during a stop)	DB	—	—	○	Each axis	All axes				
		32.4	Overcurrent detected at software detection function (during a stop)	DB	○	○	○	Each axis	All axes				
33	Overvoltage	33.1	Main circuit voltage error	EDB	○	○	○	Common	All axes	1	0	0	1
34	SSCNET receive error 1	34.1	SSCNET receive data error	SD*10	○	○*5	○	Common	All axes	—	—	—	—
		34.2	SSCNET connector connection error	SD*10	○	○	○	Common	All axes	—	—	—	—
		34.3	SSCNET communication data error	SD*10	○	○	○	Each axis	Each axis	—	—	—	—
		34.4	Hardware error signal detection	SD*10	○	○	○	Common	All axes	—	—	—	—
		34.5	SSCNET receive data error (safety observation function)	SD*10	○	○	○	—	—	—	—	—	—
		34.6	SSCNET communication data error (safety observation function)	SD*10	○	○	○	—	—	—	—	—	—
35	Command frequency error	35.1	Command frequency error	SD	○	○	○	Each axis	Each axis	1	1	0	1

Alarm		Detail		Stop method *2*3	Alarm deactivation			Processing system *9	Stop system *9	Alarm code *8			
No.	Name	No.	Name		Alarm reset	CPU reset	Cycling the power			ACD3 (Bit 3)	ACD2 (Bit 2)	ACD1 (Bit 1)	ACD0 (Bit 0)
36	SSCNET receive error 2	36.1	Continuous communication data error	SD*10	○	○	○	Each axis	Each axis	—	—	—	—
		36.2	Continuous communication data error (safety observation function)	SD*10	○	○	○	—	—	—	—	—	—
37	Parameter error	37.1	Parameter setting range error	DB	—	○	○	Each axis	Each axis	1	0	0	0
		37.2	Parameter combination error	DB	—	○	○	Each axis	Each axis				
		37.3	Point table setting error	DB	—	—	○	—	—				
39	Program error	39.1	Program error	DB	—	—	○	—	—	0	0	0	0
		39.2	Instruction argument external error	DB	—	—	○	—	—				
		39.3	Register No. error	DB	—	—	○	—	—				
		39.4	Non-correspondence instruction error	DB	—	—	○	—	—				
3A	Inrush current suppression circuit error	3A.1	Inrush current suppression circuit error	EDB	—	—	○	Common	All axes	0	0	0	0
3D	Parameter setting error for driver communication	3D.1	Parameter combination error for driver communication on slave	DB	—	—	○	—	—	—	—	—	—
		3D.2	Parameter combination error for driver communication on master	DB	—	—	○	—	—	—	—	—	—
3E	Operation mode error	3E.1	Operation mode error	DB	—	○	○	Each axis	Each axis	—	—	—	—
		3E.6	Operation mode switch error	DB	—	—	○	—	—	1	0	0	0
		3E.8	MR-D30 combination error	DB	—	○	○	—	—	—	—	—	—

Alarm		Detail		Stop method *2*3	Alarm deactivation			Processing system *2	Stop system *9	Alarm code *8			
No.	Name	No.	Name		Alarm reset	CPU reset	Cycling the power			ACD3 (Bit 3)	ACD2 (Bit 2)	ACD1 (Bit 1)	ACD0 (Bit 0)
42	Servo control error (for linear servo motor and direct drive motor)	42.1	Servo control error by position deviation	EDB	*4	*4	○	Each axis	Each axis	0	1	1	0
		42.2	Servo control error by speed deviation	EDB	*4	*4	○	Each axis	Each axis				
		42.3	Servo control error by torque/ thrust deviation	EDB	*4	*4	○	Each axis	Each axis				
	Fully closed loop control error (for fully closed loop control)	42.8	Fully closed loop control error by position deviation	EDB	*4	*4	○	Each axis	Each axis				
		42.9	Fully closed loop control error by speed deviation	EDB	*4	*4	○	Each axis	Each axis				
		42.A	Fully closed loop control error by position deviation during command stop	EDB	*4	*4	○	Each axis	Each axis				
45	Main circuit device overheat	45.1	Main circuit device overheat error 1	SD	○*1	○*1	○*1	Common	All axes	0	0	1	1
		45.2	Main circuit device overheat error 2	SD	○*1	○*1	○*1	Common	All axes				
46	Servo motor overheat	46.1	Abnormal temperature of servo motor 1	SD	○*1	○*1	○*1	Each axis	Each axis	0	0	1	1
		46.2	Abnormal temperature of servo motor 2	SD	○*1	○*1	○*1	Each axis	Each axis				
		46.3	Thermistor disconnected error	SD	○*1	○*1	○*1	Each axis	Each axis				
		46.4	Thermistor circuit error	SD	○*1	○*1	○*1	Each axis	Each axis				
		46.5	Abnormal temperature of servo motor 3	DB	○*1	○*1	○*1	Each axis	Each axis				
		46.6	Abnormal temperature of servo motor 4	DB	○*1	○*1	○*1	Each axis	Each axis				
47	Cooling fan error	47.1	Cooling fan stop error	SD	—	—	○	Common	All axes	0	0	1	1
		47.2	Cooling fan speed reduction error	SD	—	—	○	Common	All axes				

Alarm		Detail		Stop method *2*3	Alarm deactivation			Processing system *3	Stop system *3	Alarm code *3			
No.	Name	No.	Name		Alarm reset	CPU reset	Cycling the power			ACD3 (Bit 3)	ACD2 (Bit 2)	ACD1 (Bit 1)	ACD0 (Bit 0)
50	Overload 1	50.1	Thermal overload error 1 during operation	SD	○*1	○*1	○*1	Each axis	Each axis	0	0	1	1
		50.2	Thermal overload error 2 during operation	SD	○*1	○*1	○*1	Each axis	Each axis				
		50.3	Thermal overload error 4 during operation	SD	○*1	○*1	○*1	Each axis	Each axis				
		50.4	Thermal overload error 1 during a stop	SD	○*1	○*1	○*1	Each axis	Each axis				
		50.5	Thermal overload error 2 during a stop	SD	○*1	○*1	○*1	Each axis	Each axis				
		50.6	Thermal overload error 4 during a stop	SD	○*1	○*1	○*1	Each axis	Each axis				
51	Overload 2	51.1	Thermal overload error 3 during operation	DB	○*1	○*1	○*1	Each axis	Each axis	0	0	1	1
		51.2	Thermal overload error 3 during a stop	DB	○*1	○*1	○*1	Each axis	Each axis				
52	Error excessive	52.1	Excess droop pulse 1	SD	○	○	○	Each axis	Each axis	0	1	0	1
		52.3	Excess droop pulse 2	SD	○	○	○	Each axis	Each axis				
		52.4	Error excessive during 0 torque limit	SD	○	○	○	Each axis	Each axis				
		52.5	Excess droop pulse 3	EDB	○	○	○	Each axis	Each axis				
54	Oscillation detection	54.1	Oscillation detection error	EDB	○	○	○	Each axis	Each axis	0	0	1	1
56	Forced stop error	56.2	Over speed during forced stop	EDB	○	○	○	Each axis	Each axis	0	1	1	0
		56.3	Estimated distance over during forced stop	EDB	○	○	○	Each axis	Each axis				
		56.4	Forced stop start error	EDB	○	○	○	Each axis	Each axis				
61	Operation error	61.1	Point table setting range error	DB	○	—	○	—	—	0	1	0	1
63	STO timing error	63.1	STO1 off	DB	○	○	○	Common	All axes	0	1	1	0
		63.2	STO2 off	DB	○	○	○	Common	All axes				
		63.5	STO by functional safety unit	DB	○	○	○	—	—				
64	Functional safety unit setting error	64.1	STO input error	DB	—	—	○	—	—	1	0	0	0
		64.2	Compatibility mode setting error	DB	—	—	○	—	—				
		64.3	Operation mode setting error	DB	—	—	○	—	—				

Alarm		Detail		Stop method *2*3	Alarm deactivation			Processing system *9	Stop system *9	Alarm code *8			
No.	Name	No.	Name		Alarm reset	CPU reset	Cycling the power			ACD3 (Bit 3)	ACD2 (Bit 2)	ACD1 (Bit 1)	ACD0 (Bit 0)
65	Functional safety unit connection error	65.1	Functional safety unit communication error 1	SD	—	—	○	—	—	0	0	0	0
		65.2	Functional safety unit communication error 2	SD	—	—	○	—	—				
		65.3	Functional safety unit communication error 3	SD	—	—	○	—	—				
		65.4	Functional safety unit communication error 4	SD	—	—	○	—	—				
		65.5	Functional safety unit communication error 5	SD	—	—	○	—	—				
		65.6	Functional safety unit communication error 6	SD	—	—	○	—	—				
		65.7	Functional safety unit communication error 7	SD	—	—	○	—	—				
		65.8	Functional safety unit shut-off signal error 1	DB	—	—	○	—	—				
		65.9	Functional safety unit shut-off signal error 2	DB	—	—	○	—	—				

Alarm		Detail		Stop method *2*3	Alarm deactivation			Processing system *5	Stop system *9	Alarm code *8			
No.	Name	No.	Name		Alarm reset	CPU reset	Cycling the power			ACD3 (Bit 3)	ACD2 (Bit 2)	ACD1 (Bit 1)	ACD0 (Bit 0)
66	Encoder initial communication error (safety observation function)	66.1	Encoder initial communication - Receive data error 1 (safety observation function)	DB	—	—	○	—	—	0	1	1	0
		66.2	Encoder initial communication - Receive data error 2 (safety observation function)	DB	—	—	○	—	—				
		66.3	Encoder initial communication - Receive data error 3 (safety observation function)	DB	—	—	○	—	—				
		66.7	Encoder initial communication - Transmission data error 1 (safety observation function)	DB	—	—	○	—	—				
		66.9	Encoder initial communication - Process error 1 (safety observation function)	DB	—	—	○	—	—				
67	Encoder normal communication error 1 (safety observation function)	67.1	Encoder normal communication - Receive data error 1 (safety observation function)	DB	—	—	○	—	—	0	1	1	0
		67.2	Encoder normal communication - Receive data error 2 (safety observation function)	DB	—	—	○	—	—				
		67.3	Encoder normal communication - Receive data error 3 (safety observation function)	DB	—	—	○	—	—				
		67.4	Encoder normal communication - Receive data error 4 (safety observation function)	DB	—	—	○	—	—				
		67.7	Encoder normal communication - Transmission data error 1 (safety observation function)	DB	—	—	○	—	—				
68	STO diagnosis error	68.1	Mismatched STO signal error	DB	—	—	○	Common	Common	0	0	0	0

Alarm		Detail		Stop method *2*3	Alarm deactivation			Processing system *9	Stop system *9	Alarm code *8			
No.	Name	No.	Name		Alarm reset	CPU reset	Cycling the power			ACD3 (Bit 3)	ACD2 (Bit 2)	ACD1 (Bit 1)	ACD0 (Bit 0)
69	Command error	69.1	Forward rotation-side software limit detection - Command excess error	SD	○	○	○	—	—	—	—	—	—
		69.2	Reverse rotation-side software limit detection - Command excess error	SD	○	○	○	—	—	—	—	—	—
		69.3	Forward rotation stroke end detection - Command excess error	SD	○	○	○	—	—	—	—	—	—
		69.4	Reverse rotation stroke end detection - Command excess error	SD	○	○	○	—	—	—	—	—	—
		69.5	Upper stroke limit detection - Command excess error	SD	○	○	○	—	—	—	—	—	—
		69.6	Lower stroke limit detection - Command excess error	SD	○	○	○	—	—	—	—	—	—
70	Load-side encoder initial communication error 1	70.1	Load-side encoder initial communication - Receive data error 1	DB	—	—	○	Each axis	Each axis	0	1	1	0
		70.2	Load-side encoder initial communication - Receive data error 2	DB	—	—	○	Each axis	Each axis				
		70.3	Load-side encoder initial communication - Receive data error 3	DB	—	—	○	Each axis	Each axis				
		70.4	Load-side encoder initial communication - Encoder malfunction *E	DB	—	—	○	Each axis	Each axis				
		70.5	Load-side encoder initial communication - Transmission data error 1	DB	—	—	○	Each axis	Each axis				
		70.6	Load-side encoder initial communication - Transmission data error 2	DB	—	—	○	Each axis	Each axis				

Alarm		Detail		Stop method *2*3	Alarm deactivation			Processing system *9	Stop system *9	Alarm code *8			
No.	Name	No.	Name		Alarm reset	CPU reset	Cycling the power			ACD3 (Bit 3)	ACD2 (Bit 2)	ACD1 (Bit 1)	ACD0 (Bit 0)
70	Load-side encoder initial communication error 1	70.7	Load-side encoder initial communication - Transmission data error 3	DB	—	—	○	Each axis	Each axis	0	1	1	0
		70.8	Load-side encoder initial communication - Incompatible encoder *6	DB	—	—	○	Each axis	Each axis				
		70.A	Load-side encoder initial communication - Process error 1	DB	—	—	○	Each axis	Each axis				
		70.B	Load-side encoder initial communication - Process error 2	DB	—	—	○	Each axis	Each axis				
		70.C	Load-side encoder initial communication - Process error 3	DB	—	—	○	Each axis	Each axis				
		70.D	Load-side encoder initial communication - Process error 4	DB	—	—	○	Each axis	Each axis				
		70.E	Load-side encoder initial communication - Process error 5	DB	—	—	○	Each axis	Each axis				
		70.F	Load-side encoder initial communication - Process error 6	DB	—	—	○	Each axis	Each axis				
71	Load-side encoder normal communication error 1	71.1	Load-side encoder normal communication - Receive data error 1	EDB	—	—	○	Each axis	Each axis	0	1	1	0
		71.2	Load-side encoder normal communication - Receive data error 2	EDB	—	—	○	Each axis	Each axis				
		71.3	Load-side encoder normal communication - Receive data error 3	EDB	—	—	○	Each axis	Each axis				
		71.5	Load-side encoder normal communication - Transmission data error 1	EDB	—	—	○	Each axis	Each axis				

Alarm		Detail		Stop method *2*3	Alarm deactivation			Processing system *3	Stop system *3	Alarm code *8			
No.	Name	No.	Name		Alarm reset	CPU reset	Cycling the power			ACD3 (Bit 3)	ACD2 (Bit 2)	ACD1 (Bit 1)	ACD0 (Bit 0)
71	Load-side encoder normal communication error 1	71.6	Load-side encoder normal communication - Transmission data error 2	EDB	—	—	○	Each axis	Each axis	0	1	1	0
		71.7	Load-side encoder normal communication - Transmission data error 3	EDB	—	—	○	Each axis	Each axis				
		71.9	Load-side encoder normal communication - Receive data error 4	EDB	—	—	○	Each axis	Each axis				
		71.A	Load-side encoder normal communication - Receive data error 5	EDB	—	—	○	Each axis	Each axis				
72	Load-side encoder normal communication error 2	72.1	Load-side encoder data error 1	EDB	—	—	○	Each axis	Each axis	0	1	1	0
		72.2	Load-side encoder data update error	EDB	—	—	○	Each axis	Each axis				
		72.3	Load-side encoder data waveform error	EDB	—	—	○	Each axis	Each axis				
		72.4	Load-side encoder non-signal error	EDB	—	—	○	Each axis	Each axis				
		72.5	Load-side encoder hardware error 1	EDB	—	—	○	Each axis	Each axis				
		72.6	Load-side encoder hardware error 2	EDB	—	—	○	Each axis	Each axis				
		72.9	Load-side encoder data error 2	EDB	—	—	○	Each axis	Each axis				
74	Option card error 1	74.1	Option card error 1	DB	—	—	○	—	—	—	—	—	—
		74.2	Option card error 2	DB	—	—	○	—	—	—	—	—	—
		74.3	Option card error 3	DB	—	—	○	—	—	—	—	—	—
		74.4	Option card error 4	DB	—	—	○	—	—	—	—	—	—
		74.5	Option card error 5	DB	—	—	○	—	—	—	—	—	—
75	Option card error 2	75.3	Option card connection error	EDB	—	—	○	—	—	—	—	—	—
		75.4	Option card disconnected	DB	—	—	○	—	—	—	—	—	—

Alarm		Detail		Stop method *2*3	Alarm deactivation			Processing system *9	Stop system *9	Alarm code *8			
No.	Name	No.	Name		Alarm reset	CPU reset	Cycling the power			ACD3 (Bit 3)	ACD2 (Bit 2)	ACD1 (Bit 1)	ACD0 (Bit 0)
79	Functional safety unit diagnosis error	79.1	Functional safety unit power voltage error	DB	○*7	—	○	—	—	1	1	1	1
		79.2	Functional safety unit internal error	DB	—	—	○	—	—				
		79.3	Abnormal temperature of functional safety unit	SD	○*7	—	○	—	—				
		79.4	Servo amplifier error	SD	—	—	○	—	—				
		79.5	Input device error	SD	—	—	○	—	—				
		79.6	Output device error	SD	—	—	○	—	—				
		79.7	Mismatched input signal error	SD	—	—	○	—	—				
		79.8	Position feedback fixing error	DB	—	—	○	—	—				
7A	Parameter setting error (safety observation function)	7A.1	Parameter verification error (safety observation function)	DB	—	—	○	—	—	1	0	0	0
		7A.2	Parameter setting range error (safety observation function)	DB	—	—	○	—	—				
		7A.3	Parameter combination error (safety observation function)	DB	—	—	○	—	—				
		7A.4	Functional safety unit combination error (safety observation function)	DB	—	—	○	—	—				

Alarm		Detail		Stop method *2*3	Alarm deactivation			Processing system *8	Stop system *9	Alarm code *8			
No.	Name	No.	Name		Alarm reset	CPU reset	Cycling the power			ACD3 (Bit 3)	ACD2 (Bit 2)	ACD1 (Bit 1)	ACD0 (Bit 0)
7B	Encoder diagnosis error (safety observation function)	7B.1	Encoder diagnosis error 1 (safety observation function)	DB	—	—	○	—	—	0	1	1	0
		7B.2	Encoder diagnosis error 2 (safety observation function)	DB	—	—	○	—	—				
		7B.3	Encoder diagnosis error 3 (safety observation function)	DB	—	—	○	—	—				
		7B.4	Encoder diagnosis error 4 (safety observation function)	DB	—	—	○	—	—				
7C	Functional safety unit communication diagnosis error (safety observation function)	7C.1	Functional safety unit communication setting error (safety observation function)	SD	○*7	○	○	—	—	0	0	0	0
		7C.2	Functional safety unit communication data error (safety observation function)	SD	○*7	○	○	—	—				
7D	Safety observation error	7D.1	Stop observation error	DB	○*3	—	○	—	—	1	1	1	1
		7D.2	Speed observation error	DB	○*7	—	○	—	—				
82	Master-slave operation error 1	82.1	Master-slave operation error 1	EDB	○	○	○	—	—	—	—	—	—
84	Network module initialization error	84.1	Network module undetected error	DB	—	—	○	—	—	—	—	—	—
		84.2	Network module initialization error 1	DB	—	—	○	—	—	—	—	—	—
		84.3	Network module initialization error 2	DB	—	—	○	—	—	—	—	—	—
85	Network module error	85.1	Network module error 1	SD	—	—	○	—	—	—	—	—	—
		85.2	Network module error 2	SD	—	—	○	—	—	—	—	—	—
		85.3	Network module error 3	SD	—	—	○	—	—	—	—	—	—

Alarm		Detail		Stop method *2*3	Alarm deactivation			Processing system *5	Stop system *6	Alarm code *8			
No.	Name	No.	Name		Alarm reset	CPU reset	Cycling the power			ACD3 (Bit 3)	ACD2 (Bit 2)	ACD1 (Bit 1)	ACD0 (Bit 0)
86	Network communication error	86.1	Network communication error 1	SD	○	—	○	—	—	—	—	—	—
		86.2	Network communication error 2	SD	○	—	○	—	—	—	—	—	—
		86.3	Network communication error 3	SD	○	—	○	—	—	—	—	—	—
		86.4	Network communication error 4	SD	○	—	○	—	—	—	—	—	—
8A	USB communication time-out error/ serial communication time-out error/ Modbus RTU communication time-out error	8A.1	USB communication time-out error/ serial communication time-out error	SD	○	○	○	Common	All axes	0	0	0	0
		8A.2	Modbus RTU communication time-out error	SD	○	○	○	—	—				
8D	CC-Link IE communication error	8D.1	CC-Link IE communication error 1	SD	○	—	○	—	—	—	—	—	—
		8D.2	CC-Link IE communication error 2	SD	○	—	○	—	—	—	—	—	—
		8D.3	Master station setting error 1	DB	○	—	○	—	—	—	—	—	—
		8D.5	Master station setting error 2	DB	—	—	○	—	—	—	—	—	—
		8D.6	CC-Link IE communication error 3	SD	○	—	○	—	—	—	—	—	—
		8D.7	CC-Link IE communication error 4	SD	○	—	○	—	—	—	—	—	—
		8D.8	CC-Link IE communication error 5	SD	○	—	○	—	—	—	—	—	—
		8D.9	Synchronization error 1	SD	—	—	○	—	—	—	—	—	—
		8D.A	Synchronization error 2	SD	—	—	○	—	—	—	—	—	—
8E	USB communication error/serial communication error/Modbus RTU communication error	8E.1	USB communication receive error/ serial communication receive error	SD	○	○	○	Common	All axes	0	0	0	0
		8E.2	USB communication checksum error/ serial communication checksum error	SD	○	○	○	Common	All axes				
		8E.3	USB communication character error/ serial communication character error	SD	○	○	○	Common	All axes				

Alarm		Detail		Stop method *2*3	Alarm deactivation			Processing system *9	Stop system *9	Alarm code *8			
No.	Name	No.	Name		Alarm reset	CPU reset	Cycling the power			ACD3 (Bit 3)	ACD2 (Bit 2)	ACD1 (Bit 1)	ACD0 (Bit 0)
8E	USB communication error/serial communication error/Modbus RTU communication error	8E.4	USB communication command error/ serial communication command error	SD	○	○	○	Common	All axes	0	0	0	0
		8E.5	USB communication data number error/serial communication data number error	SD	○	○	○	Common	All axes				
		8E.6	Modbus RTU communication receive error	SD	○	○	○	—	—				
		8E.7	Modbus RTU communication message frame error	SD	○	○	○	—	—				
		8E.8	Modbus RTU communication CRC error	SD	○	○	○	—	—				
888 88	Watchdog	8888 _	Watchdog	DB	—	—	○	Common	All axes	—	—	—	—

*1 After resolving the source of trouble, cool the equipment for approximately 30 minutes.

*2 The following shows three stop methods of DB, EDB, and SD.
DB: Stops with dynamic brake. (Coasts for the servo amplifier without dynamic brake.)
Coasts for MR-J4-03A6(-RJ) and MR-J4W2-0303B6. Note that EDB is applied when an alarm below occurs.
[AL. 30.1], [AL. 32.2], [AL. 32.4], [AL. 51.1], [AL. 51.2], [AL. 888]
SD: Forced stop deceleration
EDB: Electronic dynamic brake stop (available with specified servo motors)
Refer to the following table for the specified servo motors. The stop method for other than the specified servo motors will be DB.

Series	Servo motor
HG-KR	HG-KR053/HG-KR13/HG-KR23/HG-KR43
HG-MR	HG-MR053/HG-MR13/HG-MR23/HG-MR43
HG-SR	HG-SR51/HG-SR52
HG-AK	HG-AK0136/HG-AK0236/HG-AK0336

*3 This is applicable when [Pr. PA04] is set to the initial value. The stop system of SD can be changed to DB using [Pr. PA04].

*4 The alarm can be canceled by setting as follows.
For the fully closed loop control: set [Pr. PE03] to "1 _ _ _".
When a linear servo motor or direct drive motor is used: set [Pr. PL04] to "1 _ _ _".

*5 In some controller communication status, the alarm factor may not be removed.

*6 This alarm will occur only in the J3 compatibility mode.

*7 Reset this while all the safety observation functions are stopped.

*8 Alarm codes are outputted only from MR-J4-_A_(-RJ)/MR-J4-DU_A_(-RJ). Refer to the following for details.
☞ Page 6 Explanation for the lists

*9 The processing and stop systems are applicable only for the multi-axis servo amplifiers (MR-J4W_-_B_). Refer to the following for details.
☞ Page 6 Explanation for the lists

*10 In the parallel drive system, the stop method is DB.

1.3 Warning list

Warning		Detail		Stop method *2*3	Processing system *6	Stop system *5
No.	Name	No.	Name			
90	Home position return incomplete warning	90.1	Home position return incomplete	—	—	—
		90.2	Home position return abnormal termination	—	—	—
		90.5	Z-phase unpassed	—	—	—
91	Servo amplifier overheat warning*1	91.1	Main circuit device overheat warning	—	Common	—
92	Battery cable disconnection warning	92.1	Encoder battery cable disconnection warning	—	Each axis	—
		92.3	Battery degradation	—	Each axis	—
93	ABS data transfer warning	93.1	ABS data transfer requirement warning during magnetic pole detection	—	—	—
95	STO warning	95.1	STO1 off detection	DB	Common	All axes
		95.2	STO2 off detection	DB	Common	All axes
		95.3	STO warning 1 (safety observation function)	DB	—	—
		95.4	STO warning 2 (safety observation function)	DB	—	—
		95.5	STO warning 3 (safety observation function)	DB	—	—
96	Home position setting warning	96.1	In-position warning at home positioning	—	Each axis	—
		96.2	Command input warning at home positioning	—	Each axis	—
		96.3	Servo off warning at home positioning	—	—	—
		96.4	Home positioning warning during magnetic pole detection	—	—	—
97	Positioning specification warning	97.1	Program operation disabled warning	—	—	—
		97.2	Next station position warning	—	—	—
98	Software limit warning	98.1	Forward rotation-side software stroke limit reached	—	—	—
		98.2	Reverse rotation-side software stroke limit reached	—	—	—
99	Stroke limit warning	99.1	Forward rotation stroke end off	*4*7	—	—
		99.2	Reverse rotation stroke end off	*4*7	—	—
		99.4	Upper stroke limit off	*7	Each axis	—
		99.5	Lower stroke limit off	*7	Each axis	—
9A	Optional unit input data error warning	9A.1	Optional unit input data sign error	—	—	—
		9A.2	Optional unit BCD input data error	—	—	—
9B	Error excessive warning	9B.1	Excess droop pulse 1 warning	—	Each axis	—
		9B.3	Excess droop pulse 2 warning	—	Each axis	—
		9B.4	Error excessive warning during 0 torque limit	—	Each axis	—
9C	Converter error	9C.1	Converter unit error	—	—	—
9D	CC-Link IE warning 1	9D.1	Station number switch change warning	—	—	—
		9D.2	Master station setting warning	—	—	—
		9D.3	Overlapping station number warning	—	—	—
		9D.4	Mismatched station number warning	—	—	—
9E	CC-Link IE warning 2	9E.1	CC-Link IE communication warning	—	—	—
9F	Battery warning	9F.1	Low battery	—	Each axis	—
		9F.2	Battery degradation warning	—	Each axis	—
E0	Excessive regeneration warning	E0.1	Excessive regeneration warning	—	Common	—

Warning		Detail		Stop method *2*3	Processing system *5	Stop system *6
No.	Name	No.	Name			
E1	Overload warning 1	E1.1	Thermal overload warning 1 during operation	—	Each axis	—
		E1.2	Thermal overload warning 2 during operation	—	Each axis	—
		E1.3	Thermal overload warning 3 during operation	—	Each axis	—
		E1.4	Thermal overload warning 4 during operation	—	Each axis	—
		E1.5	Thermal overload error 1 during a stop	—	Each axis	—
		E1.6	Thermal overload error 2 during a stop	—	Each axis	—
		E1.7	Thermal overload error 3 during a stop	—	Each axis	—
		E1.8	Thermal overload error 4 during a stop	—	Each axis	—
E2	Servo motor overheat warning	E2.1	Servo motor temperature warning	—	Each axis	—
E3	Absolute position counter warning	E3.1	Multi-revolution counter travel distance excess warning	—	—	—
		E3.2	Absolute position counter warning	—	Each axis	—
		E3.4	Absolute positioning counter EEP-ROM writing frequency warning	—	—	—
		E3.5	Encoder absolute positioning counter warning	—	Each axis	—
E4	Parameter warning	E4.1	Parameter setting range error warning	—	Each axis	—
E5	ABS time-out warning	E5.1	Time-out during ABS data transfer	—	—	—
		E5.2	ABSM off during ABS data transfer	—	—	—
		E5.3	SON off during ABS data transfer	—	—	—
E6	Servo forced stop warning	E6.1	Forced stop warning	SD	Common	All axes
		E6.2	SS1 forced stop warning 1 (safety observation function)	SD	—	—
		E6.3	SS1 forced stop warning 2 (safety observation function)	SD	—	—
E7	Controller forced stop warning	E7.1	Controller forced stop input warning	SD	Common	All axes
E8	Cooling fan speed reduction warning	E8.1	Decreased cooling fan speed warning	—	Common	—
		E8.2	Cooling fan stop	—	Common	—
E9	Main circuit off warning	E9.1	Servo-on signal on during main circuit off	DB	Common	All axes
		E9.2	Bus voltage drop during low speed operation	DB	Common	All axes
		E9.3	Ready-on signal on during main circuit off	DB	Common	All axes
		E9.4	Converter unit forced stop	DB	—	—
EA	ABS servo-on warning	EA.1	ABS servo-on warning	—	—	—
EB	The other axis error warning	EB.1	The other axis error warning	DB	Each axis	*6
EC	Overload warning 2	EC.1	Overload warning 2	—	Each axis	—
ED	Output watt excess warning	ED.1	Output watt excess warning	—	Each axis	—
F0	Tough drive warning	F0.1	Instantaneous power failure tough drive warning	—	Each axis	—
		F0.3	Vibration tough drive warning	—	Each axis	—
F2	Drive recorder - Miswriting warning	F2.1	Drive recorder - Area writing time-out warning	—	Common	—
		F2.2	Drive recorder - Data miswriting warning	—	Common	—
F3	Oscillation detection warning	F3.1	Oscillation detection warning	—	Each axis	—
F4	Positioning warning	F4.4	Target position setting range error warning	—	—	—
		F4.6	Acceleration time constant setting range error warning	—	—	—
		F4.7	Deceleration time constant setting range error warning	—	—	—
		F4.9	Home position return type error warning	—	—	—

Warning		Detail		Stop method *2*3	Processing system *5	Stop system *6
No.	Name	No.	Name			
F5	Simple cam function - Cam data miswriting warning	F5.1	Cam data - Area writing time-out warning	—	—	—
		F5.2	Cam data - Area miswriting warning	—	—	—
		F5.3	Cam data checksum error	—	—	—
F6	Simple cam function - Cam control warning	F6.1	Cam axis one cycle current value restoration failed	—	—	—
		F6.2	Cam axis feed current value restoration failed	—	—	—
		F6.3	Cam unregistered error	—	—	—
		F6.4	Cam control data setting range error	—	—	—
		F6.5	Cam No. external error	—	—	—
		F6.6	Cam control inactive	—	—	—
F7	Machine diagnosis warning	F7.1	Vibration failure prediction warning	—	Each axis	—
		F7.2	Friction failure prediction warning	—	Each axis	—
		F7.3	Total travel distance failure prediction warning	—	Each axis	—

*1 After resolving the source of trouble, cool the equipment for approximately 30 minutes.

*2 The following shows two stop methods of DB and SD.
DB: Stops with dynamic brake. (Coasts for the servo amplifier without dynamic brake.)
Coasts for MR-J4-03A6(-RJ) and MR-J4W2-0303B6.
SD: Forced stop deceleration

*3 This is applicable when [Pr. PA04] is set to the initial value. The stop system of SD can be changed to DB using [Pr. PA04].

*4 For MR-J4-_A_ servo amplifier, quick stop or slow stop can be selected using [Pr. PD30].

*5 The processing and stop systems are applicable only for the multi-axis servo amplifiers (MR-J4W_-_B_). Refer to the following for details.
☞ Page 6 Explanation for the lists

*6 As the initial value, it is applicable only for [AL. 24] and [AL. 32]. All-axis stop can be selected using [Pr. PF02].

*7 For MR-J4-_GF_ servo amplifier, quick stop or slow stop can be selected using [Pr. PD12]. (I/O mode only)

1.4 Remedies for alarms

⚠CAUTION

- When any alarm has occurred, eliminate its cause, ensure safety, and deactivate the alarm before restarting operation. Otherwise, it may cause injury.
- If [AL. 25 Absolute position erased] occurs, always make home position setting again. Otherwise, it may cause an unexpected operation.
- As soon as an alarm occurs, make the Servo-off status and interrupt the main circuit power.

Point

When any of the following alarms has occurred, do not cycle the power repeatedly to restart. Doing so will cause a malfunction of the servo amplifier and servo motor. Remove its cause and allow about 30 minutes for cooling before resuming the operation.

- [AL. 30 Regenerative error]
- [AL. 45 Main circuit device overheat]
- [AL. 46 Servo motor overheat]
- [AL. 50 Overload 1]
- [AL. 51 Overload 2]

[AL. 37 Parameter error] is not recorded in the alarm history.

Remove the cause of the alarm in accordance with this section. Use MR Configurator2 to refer to the cause of alarm occurrence.

Alarm No.: 10		Name: Undervoltage					
Alarm content		The voltage of the control circuit power supply has dropped. The voltage of the main circuit power supply has dropped.					
Detail No.	Detail name	Cause		Check method	Check result	Action	Target
10.1	Voltage drop in the control circuit power	(1)	The control circuit power supply connection is incorrect.	Check the connection of the control circuit power supply.	It has a failure.	Connect it correctly.	[A] [B] [WB] [RJ010] [GF]
					It has no failure.	Check (2).	
		(2)	The voltage of the control circuit power supply is low.	Check if the voltage of the control circuit power supply is lower than prescribed value. 200 V class: 160 V AC 400 V class: 280 V AC 100 V class: 83 V AC 24 V DC input: 17 V DC	The voltage is the prescribed value or lower.	Review the voltage of the control circuit power supply.	
					The voltage is higher than the prescribed value.	Check (3).	
		(3)	The power was cycled before the internal control circuit power supply stopped.	Check the power-on method if it has a problem.	It has a problem.	Cycle the power after the seven-segment LED of the servo amplifier is turned off.	
					It has no problem.	Check (4).	
		(4)	An instantaneous power failure has occurred for longer time than the specified time. The time will be 60 ms when [Pr. PA20] is "_ 0 _ _". The time will be the value set in [Pr. PF25] when [Pr. PA20] is "_ 1 _ _". The time will be 60 ms when [Pr. PX25] is "_ 0 _ _" and the J3 extension function is used. The time will be the value set in [Pr. PX28] when [Pr. PX25] is "_ 1 _ _". An instantaneous power failure of 15 ms or longer has occurred on MR-J4-03A6(-RJ) or MR-J4W2-0303B6.	Check if the power has a problem.	It has a problem.	Review the power.	
					It has no problem.	Check (5).	
		(5)	When a power regeneration converter is used, the voltage of the control circuit power supply is distorted.	Check if the power has a problem. When power supply impedance is high, power supply voltage will be distorted due to current at power regeneration, and it may be recognized as undervoltage.	It has a problem.	Review the setting of "[AL. 10 Undervoltage] detection method selection" with the following parameters. [A]: [Pr. PC27] [B] [WB] [RJ010] [GF]: [Pr. PC20] Review the power.	

Alarm No.: 10		Name: Undervoltage					
Alarm content		The voltage of the control circuit power supply has dropped. The voltage of the main circuit power supply has dropped.					
Detail No.	Detail name	Cause		Check method	Check result	Action	Target
10.2	Voltage drop in the main circuit power	(1)	The main circuit power supply wiring was disconnected. For the drive unit, the main circuit power supply wiring of the converter unit was disconnected.	Check the main circuit power supply wiring. Check the main circuit power supply wiring of the converter unit.	It is disconnected.	Connect it correctly.	[A] [B] [WB] [RJ010] [GF]
					It is connected.	Check (2).	
		(2)	The wiring between P3 and P4 was disconnected. For the drive unit, the wiring between P1 and P2 of the converter unit was disconnected.	Check the wiring between P3 and P4. Check the wiring between P1 and P2 of the converter unit.	It is disconnected.	Connect it correctly.	
					It is connected.	Check (3).	
		(3)	For the drive unit, the magnetic contactor control connector of the converter unit was disconnected.	Check the magnetic contactor control connector of the converter unit.	It is disconnected.	Connect it correctly.	
					It has no failure.	Check (4).	
		(4)	For the drive unit, the bus bar between the converter unit and drive unit was disconnected.	Check the bus bar between the converter unit and drive unit.	It is disconnected.	Connect it correctly.	
					It has no failure.	Check (5).	
		(5)	The voltage of the main circuit power supply is low.	Check if the voltage of the main circuit power supply is the prescribed value or lower. 200 V class: 160 V AC 400 V class: 280 V AC 100 V class: 83 V AC 48 V DC setting: 35 V DC 24 V DC setting: 15 V DC	The voltage is the prescribed value or lower.	Increase the voltage of the main circuit power supply.	
					The voltage is higher than the prescribed value.	Check (6).	
		(6)	The alarm has occurred during acceleration.	Check if the bus voltage during acceleration is lower than the prescribed value. 200 V class: 200 V DC 400 V class: 380 V DC 100 V class: 158 V DC 48 V DC setting: 35 V DC 24 V DC setting: 15 V DC	The voltage is lower than the prescribed value.	Increase the acceleration time constant. Or increase the power supply capacity.	
					The voltage is equal to or higher than the prescribed value.	Check (7).	
		(7)	The servo amplifier is malfunctioning.	Check the bus voltage value.	The bus voltage is less than the prescribed value although the voltage of the main circuit power supply is within specifications. 200 V class: 200 V DC 400 V class: 380 V DC 100 V class: 158 V DC 48 V DC setting: 35 V DC 24 V DC setting: 15 V DC	Replace the servo amplifier.	
		(8)	For the drive unit, the converter unit is malfunctioning.	Replace the converter unit, and then check the repeatability.	It is not repeatable.	Replace the converter unit.	

Alarm No.: 11	Name: Switch setting error						
Alarm content	The setting of the axis selection rotary switch or auxiliary axis number setting switch is incorrect. The setting of the disabling control axis switch is incorrect. The setting of the station number selection rotary switch is incorrect.						
Detail No.	Detail name	Cause		Check method	Check result	Action	Target
11.1	Axis number setting error	(1)	The setting of the axis No. is incorrect.	Check the settings of the auxiliary axis number setting switches (SW2-5/ SW2-6) and axis selection rotary switch (SW1).	When both of the auxiliary axis number setting switches are on, check the axis selection rotary switch if "F" is selected for MR-J4W2, ("E" or "F" is selected for MR-J4W3).	Set the axis No. correctly.	[WB]
					Both of the auxiliary axis number setting switches are off.	Replace the servo amplifier.	
	Station number setting error	(2)	The station number is set to a value other than "1" to "120" with the station number selection rotary switch.	Check the settings of the station number selection rotary switches (SW2/ SW3).	The setting of the station number selection rotary switch is set to "0" or "121" or more.	Set the station number correctly.	[GF]
					The station number is set to a value from "1" to "120" with the station number selection rotary switch.	Replace the servo amplifier.	
11.2	Disabling control axis setting error	(1)	The setting of the disabling control axis switch is incorrect.	Check the setting of the disabling control axis switch.	Check if the setting is as follows. 1) Only A-axis is disabled. 2) Only B-axis is disabled. 3) A-axis and B-axis are disabled. 4) A-axis and C-axis are disabled. 5) All axes are disabled.	Set it correctly.	[WB]
					The setting is other than above.	Replace the servo amplifier.	

Alarm No.: 12	Name: Memory error 1 (RAM)						
Alarm content	A part (RAM) in the servo amplifier is failure.						
Detail No.	Detail name	Cause		Check method	Check result	Action	Target
12.1	RAM error 1	(1)	A part in the servo amplifier is failure.	Disconnect the cables except for the control circuit power supply, and then check the repeatability.	It is repeatable.	Replace the servo amplifier.	[A] [B] [WB] [RJ010] [GF]
					It is not repeatable.	Check (2).	
		(2)	Something near the device caused it.	Check the power supply for noise.	There is a problem in the surrounding.	Take countermeasures against its cause.	
12.2	RAM error 2	Check it with the check method for [AL. 12.1].					
12.3	RAM error 3						
12.4	RAM error 4						
12.5	RAM error 5						
12.6	RAM error 6						

Alarm No.: 13		Name: Clock error					
Alarm content		A part in the servo amplifier is failure. A clock error transmitted from the controller occurred. [RJ010]: MR-J3-T10 came off.					
Detail No.	Detail name	Cause		Check method	Check result	Action	Target
13.1	Clock error 1	(1)	The MR-J3-T10 came off during the CC-Link IE communication.	Check if [AL. 74 Option card error 1] occurred with alarm history.	It is occurring.	Check it with the check method for [AL. 74].	[RJ010]
					It did not occur.	Check (2).	
		(2)	A part in the servo amplifier is failure.	Disconnect the cables except for the control circuit power supply, and then check the repeatability.	It is repeatable.	Replace the servo amplifier.	[A] [B] [WB] [RJ010] [GF]
					It is not repeatable.	Check (3).	
		(3)	A clock error transmitted from the controller occurred.	Check if the alarm occurs when you connect the amplifier to the controller.	It occurs.	Replace the controller.	[B] [WB]
					It does not occur.	Check (4).	
		(4)	The servo amplifier of the next axis is malfunctioning.	Check if the servo amplifier of the next axis is malfunctioning.	It is malfunctioning.	Replace the servo amplifier of the next axis.	
					It is not malfunctioning.	Check (5).	
		(5)	Something near the device caused it.	Check the power supply for noise. Check if the connector is shorted.	There is a problem in the surrounding.	Take countermeasures against its cause.	[A] [B] [WB] [RJ010] [GF]
13.2	Clock error 2	Check it with the check method for [AL. 13.1].					
13.3	Clock error 3						

Alarm No.: 14		Name: Control process error					
Alarm content		· The process did not complete within the specified time. · [RJ010]: MR-J3-T10 came off. · [GF]: A part (communication IC) in the servo amplifier is failure.					
Detail No.	Detail name	Cause		Check method	Check result	Action	Target
14.1	Control process error 1	(1)	The MR-J3-T10 came off during the CC-Link IE communication.	Check if [AL. 74 Option card error 1] occurred with alarm history.	It is occurring.	Check it with the check method for [AL. 74].	[RJ010]
					It did not occur.	Check (2).	
		(2)	The parameter setting is incorrect.	Check if the parameter setting is incorrect.	It is incorrect.	Set it correctly.	[A] [B] [WB] [RJ010] [GF]
					It is correct.	Check (3).	
		(3)	Something near the device caused it.	Check the power supply for noise. Check if the connector is shorted.	There is a problem in the surrounding.	Take countermeasures against its cause.	
					There is no problem in the surrounding.	Check (4).	
		(4)	The servo amplifier is malfunctioning.	Replace the servo amplifier, and then check the repeatability.	It is not repeatable.	Replace the servo amplifier.	
14.2	Control process error 2	(1)	The MR-J3-T10 came off during the CC-Link IE communication.	Check if [AL. 74 Option card error 1] occurred with alarm history.	It is occurring.	Check it with the check method for [AL. 74].	[RJ010]
					It did not occur.	Check (2).	
		(2)	A synchronous signal error transmitted from the controller occurred.	Replace the controller, and then check the repeatability.	It is repeatable.	Replace the servo amplifier.	[B] [WB]
					It is not repeatable.	Check (3).	
		(3)	Adaptive tuning mode or vibration suppression control tuning mode has been executed for multiple axes simultaneously.	Check the setting of [Pr. PB01] or [Pr. PB02]. With the J3 extension function, Check the setting of [Pr. PB01], [Pr. PB02], or [Pr. PX03].	It has been executed for multiple axes simultaneously.	Execute it for each axis.	[WB]
					It has not been executed for multiple axes simultaneously.	Check (4).	
		(4)	The parameter setting is incorrect.	Check if the parameter setting is incorrect.	It is incorrect.	Set it correctly.	[A] [B] [WB] [RJ010] [GF]
					It is correct.	Check (5).	
		(5)	Something near the device caused it.	Check the power supply for noise. Check if the connector is shorted.	There is a problem in the surrounding.	Take countermeasures against its cause.	
					There is no problem in the surrounding.	Check (6).	
		(6)	The servo amplifier is malfunctioning.	Replace the servo amplifier, and then check the repeatability.	It is not repeatable.	Replace the servo amplifier.	
14.3	Control process error 3	Check it with the check method for [AL. 14.1].					
14.4	Control process error 4						
14.5	Control process error 5						
14.6	Control process error 6						
14.7	Control process error 7						
14.8	Control process error 8						
14.9	Control process error 9						
14.A	Control process error 10						

Alarm No.: 14		Name: Control process error					
Alarm content		The process did not complete within the specified time. [RJ010]: MR-J3-T10 came off. [GF]: A part (communication IC) in the servo amplifier is failure.					
Detail No.	Detail name	Cause		Check method	Check result	Action	Target
14.B	Control process error 11	(1)	The MR-J3-T10 came off during the CC-Link IE communication.	Check if [AL. 74 Option card error 1] occurred with alarm history.	It is occurring.	Check it with the check method for [AL. 74].	[RJ010]
					It did not occur.	Check (2).	
		(2)	The parameter setting is incorrect.	Check if the parameter setting is incorrect.	It is incorrect.	Set it correctly.	[A] [B] [WB] [RJ010]
					It is correct.	Check (3).	
		(3)	Something near the device caused it.	Check the power supply for noise. Check if the connector is shorted.	It has a failure.	Take countermeasures against its cause.	[A] [B] [WB] [RJ010] [GF]
					It has no failure.	Check (4).	
		(4)	The servo amplifier is malfunctioning.	Replace the servo amplifier, and then check the repeatability.	It is not repeatable.	Replace the servo amplifier.	
14.C	Control process error 12	Check it with the check method for [AL. 14.B].					
14.D	Control process error 13						

Alarm No.: 15		Name: Memory error 2 (EEP-ROM)					
Alarm content		A part (EEP-ROM) in the servo amplifier is failure. [RJ010]: MR-J3-T10 came off.					
Detail No.	Detail name	Cause		Check method	Check result	Action	Target
15.1	EEP-ROM error at power on	(1)	EEP-ROM is malfunctioning at power on.	Disconnect the cables except for the control circuit power supply, and then check the repeatability.	It is repeatable.	Replace the servo amplifier.	[A] [B] [WB] [RJ010] [GF]
					It is not repeatable.	Check (2).	
		(2)	Something near the device caused it.	Check the power supply for noise. Check if the connector is shorted.	There is a problem in the surrounding.	Take countermeasures against its cause.	
					There is no problem in the surrounding.	Check (3).	
		(3)	The number of write times exceeded 100,000.	Check if parameters, point tables, or programs are changed very frequently.	It was changed.	Replace the servo amplifier. Change the process to use parameters, point tables, and programs less frequently after replacement.	
15.2	EEP-ROM error during operation	(1)	The MR-J3-T10 came off during the CC-Link IE communication.	Check if [AL. 74 Option card error 1] occurred with alarm history.	It is occurring.	Check it with the check method for [AL. 74].	[RJ010]
					It did not occur.	Check (2).	
		(2)	EEP-ROM is malfunctioning during normal operation.	Check if the error occurs when you change parameters during normal operation.	It occurs.	Replace the servo amplifier.	[A] [B] [WB] [RJ010] [GF]
					It does not occur.	Check (3).	
		(3)	A write error occurred while adjustment results were processed.	Check if the alarm occurs after an hour from power on.	It takes an hour or more.	Replace the servo amplifier.	
					It takes less than an hour.	Check (4).	
		(4)	Something near the device caused it.	Check the power supply for noise. Check if the connector is shorted.	There is a problem in the surrounding.	Take countermeasures against its cause.	
15.4	Home position information read error	(1)	EEP-ROM is malfunctioning at power on.	Disconnect the cables except for the control circuit power supply, and then check the repeatability.	It is repeatable.	Replace the servo amplifier.	[A] [GF]
					It is not repeatable.	Check (2).	
		(2)	Multiple rotation data saved as a home position and read from EEP-ROM were failure.	Check if the home position was set correctly.	It has a failure.	Make home position setting again.	
					It has no failure.	Check (3).	
		(3)	Something near the device caused it.	Check the power supply for noise. Check if the connector is shorted.	There is a problem in the surrounding.	Take countermeasures against its cause.	
					There is no problem in the surrounding.	Check (4).	
		(4)	The number of write times exceeded 100,000.	Check if parameters has been used very frequently.	It was changed.	Replace the servo amplifier. Change the process to use parameters less frequently after replacement.	

Alarm No.: 16		Name: Encoder initial communication error 1					
Alarm content		An error occurred in the communication between an encoder and servo amplifier.					
Detail No.	Detail name	Cause		Check method	Check result	Action	Target
16.1	Encoder initial communication - Receive data error 1	(1)	An encoder cable is malfunctioning.	Check if the encoder cable is disconnected or shorted.	It has a failure.	Replace or repair the cable.	[A] [B] [WB] [RJ010] [GF]
					It has no failure.	Check (2).	
		(2)	When you use a linear servo motor with an A/B/Z-phase differential output linear encoder, the servo amplifier is not compatible with the linear encoder.	Check if the servo amplifier (MR-J4-_-RJ) is compatible with the A/B/Z-phase differential output linear encoder.	The servo amplifier is not compatible with it.	Use a servo amplifier which is compatible with it.	[A] [B] [GF]
					The servo amplifier is compatible with it.	Check (3).	
		(3)	When you use a linear servo motor with an A/B/Z-phase differential output linear encoder, the connection with the linear encoder is incorrect.	Check if the wiring of the linear encoder is correct. (Check if it is wired to PSEL.)	The wiring is incorrect.	Wire it correctly.	
					The wiring is correct.	Check (4).	
		(4)	The servo amplifier is malfunctioning.	Replace the servo amplifier, and then check the repeatability.	It is not repeatable.	Replace the servo amplifier.	[A] [B] [WB] [RJ010] [GF]
					It is repeatable.	Check (5).	
		(5)	An encoder is malfunctioning.	Replace the servo motor or linear encoder, and then check the repeatability.	It is not repeatable.	Replace the servo motor.	
					It is repeatable.	Check (6).	
		(6)	Something near the device caused it.	Check the noise, ambient temperature, vibration, etc.	There is a problem in the surrounding.	Take countermeasures against its cause.	
16.2	Encoder initial communication - Receive data error 2	Check it with the check method for [AL. 16.1].					

Alarm No.: 16		Name: Encoder initial communication error 1						
Alarm content		An error occurred in the communication between an encoder and servo amplifier.						
Detail No.	Detail name	Cause		Check method	Check result	Action	Target	
16.3	Encoder initial communication - Receive data error 3	(1)	An axis not used is not set as disabled-axis	Check the setting of the disabling control axis switches (SW2-2/SW2-3/SW2-4).	It is not set as disabled-axis.	Set it as disabled-axis.	[WB]	
					It is set as disabled-axis.	Check (2).		
		(2)	An encoder cable was disconnected.	Check if the encoder cable is connected correctly.	It is not connected.	Connect it correctly.	[A] [B] [WB] [RJ010] [GF]	
					It is connected.	Check (3).		
		(3)	The parameter setting of communication method is incorrect. [A]: [Pr. PC22] [B] [WB] [RJ010] [GF]: [Pr. PC04]	Check the parameter setting.	The setting is incorrect.	Set it correctly.		
					The setting is correct.	Check (4).		
		(4)	In the parallel drive system, the setting of [Pr. PF40] is incorrect.	Check the parameter setting.	The setting is incorrect.	Set it correctly.	[B]	
					The setting is correct.	Check (5).		
		(5)	An encoder cable is malfunctioning.	Check if the encoder cable is disconnected or shorted.	It has a failure.	Replace or repair the cable.	[A] [B] [WB] [RJ010] [GF]	
					It has no failure.	Check (6).		
		(6)	When you use a linear servo motor with an A/B/Z-phase differential output linear encoder, the connection with the linear encoder is incorrect.	Check if the wiring of the linear encoder is correct. (Check if it is wired to PSEL.)	The wiring is incorrect.	Wire it correctly.	[A] [B] [GF]	
					The wiring is correct.	Check (7).		
		(7)	The voltage of the control circuit power supply has been unstable.	Check the voltage of the control circuit power supply.	An instantaneous power failure is occurring at the control circuit power supply.	Review the power and related parts.	[A] [B] [WB] [RJ010] [GF]	
					It has no failure.	Check (8).		
		(8)	The servo amplifier is malfunctioning.	Replace the servo amplifier, and then check the repeatability.	It is not repeatable.	Replace the servo amplifier.		
					It is repeatable.	Check (9).		
		(9)	An encoder is malfunctioning.	Replace the servo motor, and then check the repeatability.	It is not repeatable.	Replace the servo motor.		
					It is repeatable.	Check (10).		
		(10)	Something near the device caused it.	Check the noise, ambient temperature, vibration, etc.	There is a problem in the surrounding.	Take countermeasures against its cause.		
16.4	Encoder initial communication - Encoder malfunction	(1)	An encoder is malfunctioning.	Replace the servo motor, and then check the repeatability.	It is not repeatable.	Replace the servo motor.	[B] [WB]	
					It is repeatable.	Check (2).		
		(2)	Something near the device caused it.	Check the noise, ambient temperature, vibration, etc.	There is a problem in the surrounding.	Take countermeasures against its cause.		
16.5	Encoder initial communication - Transmission data error 1	Check it with the check method for [AL. 16.1].						
16.6	Encoder initial communication - Transmission data error 2							
16.7	Encoder initial communication - Transmission data error 3							

Alarm No.: 16	Name: Encoder initial communication error 1						
Alarm content	An error occurred in the communication between an encoder and servo amplifier.						
Detail No.	Detail name	Cause		Check method	Check result	Action	Target
16.8	Encoder initial communication - Incompatible encoder	(1)	A servo motor or linear encoder, which is not compatible with the servo amplifier, was connected.	Check the model of the servo motor/linear encoder.	It is not compatible with the servo amplifier.	Replace it with a compatible one.	[B] [WB]
					It is compatible with the servo amplifier.	Check (2).	
		(2)	The software version of the servo amplifier does not support the servo motor or linear encoder.	Check if the software version supports the servo motor/linear encoder.	It is not compatible.	Replace the servo amplifier to one which software version supports the servo motor/linear encoder.	
					It is compatible.	Check (3).	
		(3)	An encoder is malfunctioning.	Replace the servo motor or linear encoder, and then check the repeatability.	It is not repeatable.	Replace the servo motor or linear encoder.	
					It is repeatable.	Replace the servo amplifier.	
16.A	Encoder initial communication - Process error 1	(1)	The servo amplifier is malfunctioning.	Replace the servo amplifier, and then check the repeatability.	It is not repeatable.	Replace the servo amplifier.	[A] [B] [WB] [RJ010] [GF]
					It is repeatable.	Check (2).	
		(2)	An encoder is malfunctioning.	Replace the servo motor, and then check the repeatability.	It is not repeatable.	Replace the servo motor.	
					It is repeatable.	Check (3).	
		(3)	Something near the device caused it.	Check the noise, ambient temperature, vibration, etc.	There is a problem in the surrounding.	Take countermeasures against its cause.	
16.B	Encoder initial communication - Process error 2	Check it with the check method for [AL. 16.A].					
16.C	Encoder initial communication - Process error 3						
16.D	Encoder initial communication - Process error 4						
16.E	Encoder initial communication - Process error 5						
16.F	Encoder initial communication - Process error 6						

Alarm No.: 17	Name: Board error						
Alarm content	A part in the servo amplifier is malfunctioning.						
Detail No.	Detail name	Cause		Check method	Check result	Action	Target
17.1	Board error 1	(1)	A current detection circuit is malfunctioning.	Check if the alarm occurs during the servo-on status.	It occurs.	Replace the servo amplifier.	[A] [B] [WB] [RJ010] [GF]
					It does not occur.	Check (2).	
		(2)	Something near the device caused it.	Check the noise, ambient temperature, etc.	There is a problem in the surrounding.	Take countermeasures against its cause.	
17.3	Board error 2	Check it with the check method for [AL. 17.1].					

Alarm No.: 17		Name: Board error					
Alarm content		A part in the servo amplifier is malfunctioning.					
Detail No.	Detail name	Cause		Check method	Check result	Action	Target
17.4	Board error 3	(1)	The servo amplifier recognition signal was not read properly.	Disconnect the cables except for the control circuit power supply, and then check the repeatability.	It is repeatable.	Replace the servo amplifier.	[A] [B] [WB] [RJ010] [GF]
					It is not repeatable.	Check (2).	
		(2)	Something near the device caused it.	Check the noise, ambient temperature, etc.	There is a problem in the surrounding.	Take countermeasures against its cause.	
17.5	Board error 4	(1)	The setting value of the axis selection rotary switch (SW1) was not read properly.	Disconnect the cables except for the control circuit power supply, and then check the repeatability.	It is repeatable.	Replace the servo amplifier.	[B] [WB]
					It is not repeatable.	Check (2).	
		(2)	Something near the device caused it.	Check the noise, ambient temperature, etc.	There is a problem in the surrounding.	Take countermeasures against its cause.	
17.6	Board error 5	(1)	The setting value of the control axis setting switch (SW2) was not read properly.	Disconnect the cables except for the control circuit power supply, and then check the repeatability.	It is repeatable.	Replace the servo amplifier.	[B] [WB]
					It is not repeatable.	Check (2).	
		(2)	Something near the device caused it.	Check the noise, ambient temperature, etc.	There is a problem in the surrounding.	Take countermeasures against its cause.	
17.7	Board error 7	Check it with the check method for [AL. 17.4].					
17.8	Board error 6	(1)	Inrush current suppressor circuit is malfunctioning.	Replace the servo amplifier, and then check the repeatability.	It is not repeatable.	Replace the servo amplifier.	[B] [WB]
17.9	Board error 8	(1)	Something near the device caused it.	Check the noise, ambient temperature, etc.	There is a problem in the surrounding.	Take countermeasures against its cause.	[GF]
					There is no problem in the surrounding.	Check (2).	
		(2)	The servo amplifier is malfunctioning.	Replace the servo amplifier, and then check the repeatability.	It is not repeatable.	Replace the servo amplifier.	

Alarm No.: 19		Name: Memory error 3 (Flash-ROM)					
Alarm content		A part (Flash-ROM) in the servo amplifier is failure.					
Detail No.	Detail name	Cause		Check method	Check result	Action	Target
19.1	Flash-ROM error 1	(1)	The Flash-ROM is malfunctioning.	Disconnect the cables except for the control circuit power supply, and then check the repeatability.	It is repeatable.	Replace the servo amplifier.	[A] [B] [WB] [RJ010] [GF]
					It is not repeatable.	Check (2).	
		(2)	Something near the device caused it.	Check the noise, ambient temperature, etc.	There is a problem in the surrounding.	Take countermeasures against its cause.	
19.2	Flash-ROM error 2	Check it with the check method for [AL. 19.1].					
19.3	Flash-ROM error 3						

Alarm No.: 1A		Name: Servo motor combination error					
Alarm content		The combination of servo amplifier and servo motor is incorrect.					
Detail No.	Detail name	Cause		Check method	Check result	Action	Target
1A.1	Servo motor combination error 1	(1)	The servo amplifier and the servo motor was connected incorrectly.	Check the model name of the servo motor and corresponding servo amplifier.	The combination is incorrect.	Use them in the correct combination.	[A] [B] [WB] [RJ010] [GF]
					The combination is correct.	Check (2).	
		(2)	The setting of [Pr. PA01] is not corresponding to the connected servo motor.	Check the [Pr. PA01] setting Rotary servo motor: "_ _ 0 _" Linear servo motor: "_ _ 4 _" Direct drive motor: "_ _ 6 _"	The combination is incorrect.	Set [Pr. PA01] correctly. When using a linear servo motor, also check (3).	[A] [B] [WB] [GF]
					The combination is correct.	Check (4).	
		(3)	[Pr. PA17] and [Pr. PA18] were not set according to the linear servo motor to be used.	Check if [Pr. PA17] and [Pr. PA18] are set correctly.	It is not set correctly.	Set them correctly according to the linear servo motor to be used.	
		(4)	The software version of the servo amplifier does not support the TM-RG2M/TM-RU2M series direct drive motor.	Check if the software version of the servo amplifier supports the TM-RG2M/TM-RU2M series.	It is C7 or earlier.	Replace the servo amplifier with a one whose software version supports the TM-RG2M/TM-RU2M series.	
					It is C8 or later.	Check (5).	
		(5)	An encoder is malfunctioning.	Replace the servo motor, and then check the repeatability.	It is not repeatable.	Replace the servo motor.	[A] [B] [WB] [RJ010] [GF]
1A.2	Servo motor control mode combination error	(1)	The setting of [Pr. PA01] is not corresponding to the connected servo motor.	Check the [Pr. PA01] setting Rotary servo motor: "_ _ 0 _" Linear servo motor: "_ _ 4 _" Direct drive motor: "_ _ 6 _"	The combination is incorrect.	Set [Pr. PA01] correctly.	[A] [B] [WB] [GF]
		(2)	When the fully closed loop control mode is selected, encoders of the servo motor side and the machine side are connected reversely.	Check the connection destination of the encoder.	The connection destination of the encoder is incorrect.	Connect it correctly.	
1A.4	Servo motor combination error 2	(1)	The servo amplifier is malfunctioning.	Replace the servo amplifier, and then check the repeatability.	It is not repeatable.	Replace the servo amplifier.	

Alarm No.: 1B		Name: Converter alarm					
Alarm content		An alarm occurred in the converter unit during the servo-on.					
Detail No.	Detail name	Cause		Check method	Check result	Action	Target
1B.1	Converter unit error	(1)	The protection coordination cable is not correctly connected.	Check the protection coordination cable connection.	It is not connected.	Connect it correctly.	[A] [B]
					It is connected.	Check (2).	
		(2)	An alarm occurred in the converter unit during the servo-on.	Check the alarm of the converter unit, and take the action following the remedies for alarms of the converter unit.			

Alarm No.: 1E		Name: Encoder initial communication error 2					
Alarm content		An encoder is malfunctioning.					
Detail No.	Detail name	Cause		Check method	Check result	Action	Target
1E.1	Encoder malfunction	(1)	An encoder is malfunctioning.	Replace the servo motor, and then check the repeatability.	It is not repeatable.	Replace the servo motor.	[A] [B] [WB] [RJ010] [GF]
					It is repeatable.	Check (2).	
		(2)	Something near the device caused it.	Check the noise, ambient temperature, vibration, etc.	There is a problem in the surrounding.	Take countermeasures against its cause.	
1E.2	Load-side encoder malfunction	(1)	A load-side encoder is malfunctioning.	Replace the load-side encoder, and then check the repeatability.	It is not repeatable.	Replace the load-side encoder.	[A] [B] [WB] [GF]
					It is repeatable.	Check (2).	
		(2)	Something near the device caused it.	Check the noise, ambient temperature, vibration, etc.	There is a problem in the surrounding.	Take countermeasures against its cause.	

Alarm No.: 1F		Name: Encoder initial communication error 3					
Alarm content		The connected encoder is not compatible with the servo amplifier.					
Detail No.	Detail name	Cause		Check method	Check result	Action	Target
1F.1	Incompatible encoder	(1)	A servo motor or linear encoder, which is not compatible with the servo amplifier, was connected.	Check the model of the servo motor/linear encoder.	It is not compatible with the servo amplifier.	Replace it with a compatible one.	[A] [B] [WB] [RJ010] [GF]
					It is compatible with the servo amplifier.	Check (2).	
		(2)	The software version of the servo amplifier does not support the servo motor or linear encoder.	Check if the software version supports the servo motor/linear encoder.	It is not compatible.	Replace the servo amplifier to one which software version supports the servo motor/linear encoder.	
					It is compatible.	Check (3).	
		(3)	An encoder is malfunctioning.	Replace the servo motor or linear encoder, and then check the repeatability.	It is not repeatable.	Replace the servo motor or linear encoder.	
					It is repeatable.	Replace the servo amplifier.	
1F.2	Incompatible load-side encoder	(1)	A load-side encoder, which is not compatible with the servo amplifier, was connected.	Check the model of the load-side encoder.	It is not compatible with the servo amplifier.	Use a load-side encoder which is compatible with the servo amplifier.	[A] [B] [WB] [GF]
					It is compatible with the servo amplifier.	Check (2).	
		(2)	The software version of the servo amplifier does not support the load-side encoder.	Check if the software version of the servo amplifier supports the load-side encoder.	It is not compatible.	Replace the servo amplifier to one which software version supports the load-side encoder.	
					It is compatible.	Check (3).	
		(3)	A load-side encoder is malfunctioning.	Replace the load-side encoder, and then check the repeatability.	It is not repeatable.	Replace the load-side encoder.	
					It is repeatable.	Replace the servo amplifier.	

Alarm No.: 20		Name: Encoder normal communication error 1					
Alarm content		An error occurred in the communication between an encoder and servo amplifier.					
Detail No.	Detail name	Cause		Check method	Check result	Action	Target
20.1	Encoder normal communication - Receive data error 1	(1)	An encoder cable is malfunctioning.	Check if the encoder cable is disconnected or shorted. When you use an A/B/Z-phase differential output linear encoder, check the wiring of the linear encoder.	It has a failure.	Repair or replace the cable.	[A] [B] [WB] [RJ010] [GF]
					It has no failure.	Check (2).	
		(2)	The external conductor of the encoder cable is not connected to the ground plate of the connector.	Check if it is connected.	It is not connected.	Connect it correctly.	
					It is connected.	Check (3).	
		(3)	The parameter setting of communication method is incorrect. [A]: [Pr. PC22] [B] [WB] [RJ010] [GF]: [Pr. PC04]	Check the parameter setting.	The setting is incorrect.	Set it correctly.	
					The setting is correct.	Check (4).	
		(4)	In the parallel drive system, the setting of [Pr. PF40] is incorrect.	Check the parameter setting.	The setting is incorrect.	Set it correctly.	
					The setting is correct.	Check (5).	
		(5)	The servo amplifier is malfunctioning.	Replace the servo amplifier, and then check the repeatability.	It is not repeatable.	Replace the servo amplifier.	
					It is repeatable.	Check (6).	
		(6)	An encoder is malfunctioning.	Replace the servo motor or linear encoder, and then check the repeatability.	It is not repeatable.	Replace the servo motor or linear encoder.	
					It is repeatable.	Check (7).	
		(7)	Something near the device caused it.	Check the noise, ambient temperature, vibration, etc.	There is a problem in the surrounding.	Take countermeasures against its cause.	
20.2	Encoder normal communication - Receive data error 2	Check it with the check method for [AL. 20.1].					
20.3	Encoder normal communication - Receive data error 3						

Alarm No.: 20		Name: Encoder normal communication error 1					
Alarm content		An error occurred in the communication between an encoder and servo amplifier.					
Detail No.	Detail name	Cause		Check method	Check result	Action	Target
20.5	Encoder normal communication - Transmission data error 1	(1)	When you use an A/B/Z-phase differential output linear encoder, the wiring of the linear encoder is incorrect.	Check if the A/B-phase pulse signals (PA, PAR, PB, and PBR) of the encoder cable are disconnected or shorted.	It is disconnected or shorted.	Repair the encoder cable.	[A] [B] [GF]
					It is not disconnected or shorted.	Check (2).	
		(2)	An encoder cable is malfunctioning.	Check it with the check method for [AL. 20.1]			[A] [B] [WB] [RJ010] [GF]
		(3)	The external conductor of the encoder cable is not connected to the ground plate of the connector.				
		(4)	When you use an A/B/Z-phase differential output linear encoder, the parameter setting is incorrect.				
		(5)	The servo amplifier is malfunctioning.				
		(6)	An encoder is malfunctioning.				
		(7)	Something near the device caused it.				
20.6	Encoder normal communication - Transmission data error 2	(1)	When you use an A/B/Z-phase differential output linear encoder, the wiring of the linear encoder is incorrect.	Check if the Z-phase pulse signals (PZ/PZR) of the encoder cable are disconnected or shorted.	It is disconnected or shorted.	Repair the encoder cable.	[A] [B] [GF]
					It is not disconnected or shorted.	Check (2).	
		(2)	An encoder cable is malfunctioning.	Check it with the check method for [AL. 20.1]			[A] [B] [WB] [RJ010] [GF]
		(3)	The external conductor of the encoder cable is not connected to the ground plate of the connector.				
		(4)	When you use an A/B/Z-phase differential output linear encoder, the parameter setting is incorrect.				
		(5)	The servo amplifier is malfunctioning.				
		(6)	An encoder is malfunctioning.				
		(7)	Something near the device caused it.				
20.7	Encoder normal communication - Transmission data error 3	Check it with the check method for [AL. 20.1]					
20.9	Encoder normal communication - Receive data error 4						
20.A	Encoder normal communication - Receive data error 5						

Alarm No.: 21		Name: Encoder normal communication error 2					
Alarm content		The encoder detected an error signal.					
Detail No.	Detail name	Cause		Check method	Check result	Action	Target
21.1	Encoder data error 1	(1)	The encoder detected a high speed/ acceleration rate due to an oscillation or other factors.	Decrease the loop gain, and then check the repeatability.	It is not repeatable.	Use the encoder with low loop gain.	[A] [B] [WB] [RJ010] [GF]
					It is repeatable.	Check (2).	
		(2)	The external conductor of the encoder cable is not connected to the ground plate of the connector.	Check if it is connected.	It is not connected.	Connect it correctly.	
					It is connected.	Check (3).	
		(3)	An encoder is malfunctioning.	Replace the servo motor, and then check the repeatability.	It is not repeatable.	Replace the servo motor.	
					It is repeatable.	Check (4).	
		(4)	Something near the device caused it.	Check the noise, ambient temperature, vibration, etc.	There is a problem in the surrounding.	Take countermeasures against its cause.	
21.2	Encoder data update error	(1)	An encoder is malfunctioning.	Replace the servo motor, and then check the repeatability.	It is not repeatable.	Replace the servo motor.	[A] [B] [WB] [RJ010] [GF]
					It is repeatable.	Check (2).	
		(2)	The external conductor of the encoder cable is not connected to the ground plate of the connector.	Check if it is connected.	It is not connected.	Connect it correctly.	
					It is connected.	Check (3).	
		(3)	Something near the device caused it.	Check the noise, ambient temperature, etc.	There is a problem in the surrounding.	Take countermeasures against its cause.	
21.3	Encoder data waveform error	Check it with the check method for [AL. 21.2].					
21.4	Encoder non-signal error	(1)	A signal of the encoder has not been inputted.	Check if the encoder cable is wired correctly.	It has a failure.	Review the wiring.	[A] [B] [WB] [GF]
					It has no failure.	Check (2).	
		(2)	The external conductor of the encoder cable is not connected to the ground plate of the connector.	Check if it is connected.	It is not connected.	Connect it correctly.	
					It is connected.	Check (3).	
		(3)	Something near the device caused it.	Check the noise, ambient temperature, etc.	There is a problem in the surrounding.	Take countermeasures against its cause.	
21.5	Encoder hardware error 1	Check it with the check method for [AL. 21.2].					
21.6	Encoder hardware error 2						
21.9	Encoder data error 2	Check it with the check method for [AL. 21.1].					

Alarm No.: 24		Name: Main circuit error						
Alarm content		A ground fault occurred on the servo motor power lines. A ground fault occurred at the servo motor. Power supply voltage for inverter circuit control is low. (Only for MR-J4W2-0303B6)						
Detail No.	Detail name	Cause			Check method	Check result	Action	Target
24.1	Ground fault detected by hardware detection circuit	(1)	The servo amplifier is malfunctioning.		Disconnect the servo motor power cables (U/V/W) and check if the alarm occurs.	It occurs.	Replace the servo amplifier.	[A] [B] [WB] [RJ010] [GF]
						It does not occur.	Check (2).	
		(2)	A ground fault or short occurred at the servo motor power cable.		Check if only the servo motor power cable is shorted.	It is shorted.	Replace the servo motor power cable.	
						It is not shorted.	Check (3).	
		(3)	A ground fault occurred at the servo motor.		Disconnect the servo motor power cables on motor side, and check insulation of the motor (between U/V/W/⏚).	It is shorted.	Replace the servo motor.	
						It is not shorted.	Check (4).	
		(4)	The main circuit power supply cable and servo motor power cable were shorted.		Shut off the power, and check if the main circuit power supply cable and servo motor power cable are in contact.	They are in contact.	Correct the wiring.	
						They are not in contact.	Check (5).	
		(5)	Something near the device caused it.		Check the noise, ambient temperature, etc.	There is a problem in the surrounding.	Take countermeasures against its cause.	
24.2	Ground fault detected by software detection function	(1)	For MR-J4W2-0303B6, the servo-on command was inputted when the control circuit power supply voltage was below 20 V.		Check the control circuit power supply voltage when the servo-on command was inputted.	The control circuit power supply voltage was below 20 V.	Input the servo-on command after the control circuit power supply voltage reaches 20 V or higher.	[WB]
						The control circuit power supply voltage was 20 V or higher.	Check (2).	
		(2)	The servo amplifier is malfunctioning.		Disconnect the servo motor power cable (U/V/W), and check if the alarm occurs.	It occurs.	Replace the servo amplifier.	[A] [B] [WB] [RJ010] [GF]
						It does not occur.	Check (3).	
		(3)	A ground fault or short occurred at the servo motor power cable.		Check if only the servo motor power cable is shorted.	It is shorted.	Replace the servo motor power cable.	
						It is not shorted.	Check (4).	
		(4)	A ground fault occurred at the servo motor.		Disconnect the servo motor power cables on motor side, and check insulation between phases (U/V/W/⏚).	It is shorted.	Replace the servo motor.	
						It is not shorted.	Check (5).	
		(5)	The main circuit power supply cable and servo motor power cable were shorted.		Shut off the power, and check if the main circuit power supply cable and servo motor power cable are in contact.	They are in contact.	Correct the wiring.	
						They are not in contact.	Check (6).	
		(6)	Something near the device caused it.		Check the noise, ambient temperature, etc.	There is a problem in the surrounding.	Take countermeasures against its cause.	

Alarm No.: 25		Name: Absolute position erased					
Alarm content		The absolute position data is faulty. Power was switched on for the first time in the absolute position detection system. After the scale measurement encoder was set to the absolute position detection system, the power was switched on for the first time.					
Detail No.	Detail name	Cause		Check method	Check result	Action	Target
25.1	Servo motor encoder - Absolute position erased	(1)	Power was switched on for the first time in the absolute position detection system.	Check if this is the first time you switched on the power in the absolute position detection system.	This is the first time.	Check that the battery is mounted correctly, and make home position return.	[A] [B] [WB] [RJ010] [GF]
					This is not the first time.	Check (2).	
		(2)	1) When an MR-BAT6V1SET(-A) battery or MR-BT6VCASE battery case was used, CN4 of the servo amplifier was disconnected during control circuit power supply off. 2) When an MR-BAT6V1BJ battery for junction battery cable was used, both CN4 of the servo amplifier and MR-BAT6V1BJ battery for junction battery cable were disconnected from the MR-BT6VCBL03M junction battery cable.	Check if the battery was removed in this way when the control circuit power supply was off.	It was removed.	Check that the battery is mounted correctly, and make home position return.	
					It was not removed.	Check (3).	
		(3)	1) When an MR-BAT6V1SET(-A) battery or MR-BT6VCASE battery case was used, the power was turned off with the battery disconnected from CN4. 2) When an MR-BAT6V1BJ battery for junction battery cable was used, the power was turned off with the battery disconnected from CN4 and MR-BT6VCBL03M junction battery cable.	Check if the power was turned off in this state.	It was turned off.	Check that the battery is mounted correctly, and make home position return.	
					It was not turned off.	MR-BAT6V1BJ battery for junction battery cable: Refer to (4). MR-BAT6V1SET(-A) battery or MR-BT6VCASE battery case: Refer to (6).	
		(4)	The encoder cable was disconnected with the MR-BAT6V1BJ battery disconnected from MR-BT6VCBL03M junction battery cable.	Check if the encoder cable was disconnected in this state.	It was disconnected.	Check that the MR-BAT6V1BJ battery is connected to CN4 and MR-BT6VCBL03M junction battery cable, and execute a home position return.	[A] [B] [RJ010] [GF]
					It was not disconnected.	Check (5).	

Alarm No.: 25		Name: Absolute position erased					
Alarm content		The absolute position data is faulty. Power was switched on for the first time in the absolute position detection system. After the scale measurement encoder was set to the absolute position detection system, the power was switched on for the first time.					
Detail No.	Detail name	Cause		Check method	Check result	Action	Target
25.1	Servo motor encoder - Absolute position erased	(5)	The MR-BT6VCBL03M junction battery cable is not connected to the encoder cable.	Check if the MR-BT6VCBL03M junction battery cable is connected to the encoder cable.	It is not connected.	Connect the MR-BT6VCBL03M junction battery cable to the encoder cable.	[A] [B] [RJ010] [GF]
					It is connected.	Check (6).	
		(6)	The battery voltage is low. The battery is consumed.	Check the battery voltage with a tester. When an MR-BAT6V1BJ battery for junction battery cable was used, check the voltage of the connector (orange) for servo amplifier.	It is less than 3 V DC.	Replace the battery.	[A] [B] [WB] [RJ010] [GF]
					It is 3 V DC or more.	Check (7).	
		(7)	The voltage has dropped greatly in the encoder cable wired to the battery.	Check if a recommended cable is used for the encoder cable.	It is not used.	Use a recommended wire.	
					It is used.	Check (8).	
		(8)	A battery cable is malfunctioning.	Check for the loose connection with a tester.	It has a failure.	Replace the battery cable.	
					It has no failure.	Check (9).	
		(9)	There is a loose connection of the encoder cable on the servo motor side.	Check for the loose connection with a tester. Measure the voltage on the servo motor side.	It has a failure.	Repair or replace the encoder cable.	
					It has no failure.	Check (10).	
		(10)	The absolute position storage unit was not connected for using a direct drive motor.	Check if the absolute position storage unit is connected correctly.	It is not connected.	Connect the absolute position storage unit correctly.	[A] [B] [WB] [GF]
					It is connected.	Check (11).	
		(11)	The servo amplifier is malfunctioning.	Replace the servo amplifier, and then check the repeatability.	It is not repeatable.	Replace the servo amplifier.	[A] [B] [WB] [RJ010] [GF]
					It is repeatable.	Check (12).	
		(12)	An encoder is malfunctioning.	Replace the servo motor, and then check the repeatability.	It is not repeatable.	Replace the servo motor.	

Alarm No.: 25		Name: Absolute position erased					
Alarm content		The absolute position data is faulty. Power was switched on for the first time in the absolute position detection system. After the scale measurement encoder was set to the absolute position detection system, the power was switched on for the first time.					
Detail No.	Detail name	Cause		Check method	Check result	Action	Target
25.2	Scale measurement encoder - Absolute position erased	(1)	After the scale measurement encoder was set to the absolute position detection system, the power was switched on for the first time.	Check if this is the first time to switch on the power after the scale measurement encoder was set to the absolute position detection system.	This is the first time.	Check that the battery is mounted correctly, and make home position return.	[B] [WB] [GF]
					This is not the first time.	Check (2).	
		(2)	The battery was removed (replaced) when the control circuit power supply was off.	Check if the battery was removed when the control circuit power supply was off.	It was removed.	Check that the battery is mounted correctly, and make home position return.	
					It was not removed.	Check (3).	
		(3)	The power was turned off with the battery disconnected from CN4.	Check if the power was turned off in this state.	It was turned off.	Check that the battery is mounted correctly, and make home position return.	
					It was not turned off.	Check (4).	
		(4)	The battery voltage is low. The battery is consumed.	Check the battery voltage with a tester.	It is less than 3 V DC.	Replace the battery.	
					It is 3 V DC or more.	Check (5).	
		(5)	The voltage has dropped greatly in the encoder cable wired to the battery.	Check if a recommended cable is used for the encoder cable.	It is not used.	Use a recommended wire.	
					It is used.	Check (6).	
		(6)	A battery cable is malfunctioning.	Check for the loose connection with a tester.	It has a failure.	Replace the battery cable.	
					It has no failure.	Check (7).	
		(7)	There is a loose connection of the encoder cable on the scale measurement encoder side.	Check for the loose connection with a tester. Measure the voltage on the scale measurement encoder side.	It has a failure.	Repair or replace the encoder cable.	
					It has no failure.	Check (8).	
		(8)	The servo amplifier is malfunctioning.	Replace the servo amplifier, and then check the repeatability.	It is not repeatable.	Replace the servo amplifier.	
					It is repeatable.	Check (9).	
		(9)	The scale measurement encoder is malfunctioning.	Replace the scale measurement encoder, and then check the repeatability.	It is not repeatable.	Replace the scale measurement encoder.	

Alarm No.: 27		Name: Initial magnetic pole detection error						
Alarm content		The initial magnetic pole detection was not completed properly.						
Detail No.	Detail name	Cause		Check method	Check result	Action	Target	
27.1	Magnetic pole detection - Abnormal termination	(1)	A moving part collided against the machine.	Check if it collided.	It collided.	Move the start position of the magnetic pole detection.	[A] [B] [WB] [GF]	
					It did not collided.	Check (2).		
		(2)	The wiring of the servo motor power cable is incorrect.	Check if the wiring of the servo motor power cable is correct.	It has a failure.	Correct the wiring.		
					It has no failure.	Check (3).		
		(3)	The linear encoder resolution setting differs from the setting value.	Check the setting of [Pr. PL02] and [Pr. PL03].	The setting is incorrect.	Set it correctly.		
					The setting is correct.	Check (4).		
		(4)	The direction of mounting linear encoder is incorrect.	Check polarities of the linear encoder and the linear servo motor.	The mounting direction is incorrect.	Mount it correctly. Review the "encoder pulse count polarity selection" setting of the parameter as required. [A]: [Pr. PC45] [B] [WB] [GF]: [Pr. PC27]		
					The mounting direction is correct.	Check (5).		
		(5)	An excitation level of the magnetic pole detection voltage level is small.	Check if the travel distance during the magnetic pole detection is too short (for a position detection method).	It is too short.	Increase it with the [Pr. PL09] setting.		
				Check if the travel distance during the magnetic pole detection is too long or if a vibration is occurring (for a minute position detection method).	The travel distance is too long or a vibration is occurring.	Review the [Pr. PL17] setting.		
27.2	Magnetic pole detection - Time out error	(1)	Servo-on was enabled when the primary side of linear servo motor or rotor of direct drive motor did not stop.	Check if servo-on was enabled when the motor did not stop.	Servo-on was enabled when the motor did not stop.	Stop the linear servo motor and the direct drive motor, and enable servo-on again.		
					Servo-on was enabled when the motor stopped.	Check (2).		
		(2)	Only one of the limit switches is on during magnetic pole detection.	Check the limit switches.	It has a failure.	Remove the cause. Move the start position of the magnetic pole detection.		
					It has no failure.	Check (3).		
		(3)	The magnetic pole detection voltage level is small.	Check if the travel distance during the magnetic pole detection is too short (for a position detection method).	It is too short.	Increase it with the [Pr. PL09] setting.		

Alarm No.: 27		Name: Initial magnetic pole detection error					
Alarm content		The initial magnetic pole detection was not completed properly.					
Detail No.	Detail name	Cause		Check method	Check result	Action	Target
27.3	Magnetic pole detection - Limit switch error	(1)	Both of the limit switches are off during the magnetic pole detection.	Check the limit switches.	Both of them are off.	Turn on the limit switches. When using a direct drive motor, also check (2).	[A] [B] [WB] [GF]
		(2)	When using a direct drive motor in a system where the motor rotates one revolution or more, the following stroke limit signals are not enabled with a parameter. [A]: LSP and LSN [B] [WB]: FLS and RLS [GF]: LSP and LSN (FLS and RLS from the controller)	Check the [Pr. PL08] setting.	The [Pr. PL08] setting is "_ 0 _ _".	Set the [Pr. PL08] setting to "_ 1 _ _".	
27.4	Magnetic pole detection - Estimated error	Check it with the check method for [AL. 27.1].					
27.5	Magnetic pole detection - Position deviation error						
27.6	Magnetic pole detection - Speed deviation error						
27.7	Magnetic pole detection - Current error						

Alarm No.: 28		Name: Linear encoder error 2					
Alarm content		Working environment of linear encoder is not normal.					
Detail No.	Detail name	Cause		Check method	Check result	Action	Target
28.1	Linear encoder - Environment error.	(1)	The ambient temperature of the linear encoder is out of specifications.	Check the ambient temperature of the linear encoder.	It is out of specifications.	Lower the temperature. Contact the linear encoder manufacturer.	[A] [B] [WB] [GF]
					It is within specifications.	Check (2).	
		(2)	The signal level of the linear encoder has dropped.	Check the mounting condition of the linear encoder.	It has a failure.	Correct the mounting method of the linear encoder.	

Alarm No.: 2A		Name: Linear encoder error 1					
Alarm content		An error of the linear encoder was detected. (The details vary depending on the linear encoder manufacturer.)					
Detail No.	Detail name	Cause		Check method	Check result	Action	Target
2A.1	Linear encoder error 1-1	(1)	Mounting condition of the linear encoder and head is failure.	Adjust the positions of the scale and head, and then check the repeatability.	It is not repeatable.	Use the equipment at the adjusted position.	[A] [B] [WB] [GF]
					It is repeatable.	Check (2).	
		(2)	The external conductor of the encoder cable is not connected to the ground plate of the connector.	Check if it is connected.	It is not connected.	Connect it correctly.	
					It is connected.	Check (3).	
		(3)	Something near the device caused it.	Check the noise, ambient temperature, vibration, etc.	There is a problem in the surrounding.	Take countermeasures against its cause.	
					There is no problem in the surrounding.	Check (4).	
		(4)	An alarm of the linear encoder was detected.	Check the content of the alarm detail list of the Linear Encoder Instruction Manual.	Remove its cause described in the instruction manual.	Contact each encoder manufacturer for how to deal with it.	
2A.2	Linear encoder error 1-2	Check it with the check method for [AL. 2A.1].					
2A.3	Linear encoder error 1-3						
2A.4	Linear encoder error 1-4						
2A.5	Linear encoder error 1-5						
2A.6	Linear encoder error 1-6						
2A.7	Linear encoder error 1-7						
2A.8	Linear encoder error 1-8						

Alarm No.: 2B		Name: Encoder counter error					
Alarm content		Data which encoder created is failure.					
Detail No.	Detail name	Cause		Check method	Check result	Action	Target
2B.1	Encoder counter error 1	(1)	An encoder cable is malfunctioning.	Check if the encoder cable is disconnected or shorted.	It has a failure.	Repair or replace the cable.	[A] [B] [WB] [GF]
					It has no failure.	Check (2).	
		(2)	The external conductor of the encoder cable is not connected to the ground plate of the connector.	Check if it is connected.	It is not connected.	Connect it correctly.	
					It is connected.	Check (3).	
		(3)	Something near the device caused it.	Check the noise, ambient temperature, vibration, etc.	There is a problem in the surrounding.	Take countermeasures against its cause.	
					There is no problem in the surrounding.	Check (4).	
		(4)	An encoder is malfunctioning.	Replace the direct drive motor, and then check the repeatability.	It is not repeatable.	Replace the direct drive motor.	
2B.2	Encoder counter error 2	Check it with the check method for [AL. 2B.1].					

Alarm No.: 30		Name: Regenerative error					
Alarm content		Permissible regenerative power of the built-in regenerative resistor or regenerative option is exceeded. A regenerative transistor in the servo amplifier is malfunctioning.					
Detail No.	Detail name	Cause		Check method	Check result	Action	Target
30.1	Regeneration heat error	(1)	The setting of the regenerative resistor (regenerative option) is incorrect.	Check the regenerative resistor (regenerative option) and [Pr. PA02] setting.	The setting value is incorrect.	Set it correctly.	[A] [B] [WB] [RJ010] [GF]
					It is set correctly.	Check (2).	
		(2)	The regenerative resistor (regenerative option) is not connected.	Check if the regenerative resistor (regenerative option) is connected correctly.	It is not connected correctly.	Connect it correctly.	
					It is connected correctly.	Check (3).	
		(3)	The combination of regenerative resistor (regenerative option) and servo amplifier is incorrect.	Check if the regenerative resistor (regenerative option) and the servo amplifier are connected in the specified combination.	The combination is incorrect.	Use them in the correct combination.	
					The combination is correct.	Check (4).	
		(4)	The power supply voltage is high.	Check if the voltage of the input power supply is over the prescribed value. 200 V class: 264 V AC 400 V class: 528 V AC 100 V class: 132 V AC 48 V DC setting: 70 V DC 24 V DC setting: 50 V DC	It is higher than the prescribed value.	Reduce the power supply voltage.	
					It is at the prescribed value or lower.	Check (5).	
		(5)	The regenerative load ratio exceeded 100%.	Check the regenerative load ratio when alarm occurs.	It is 100% or more.	Reduce the frequency of positioning. Increase the deceleration time constant. Reduce the load. Use a regenerative option if it is not being used. Review the regenerative option capacity. For MR-J4-03A6(-RJ) and MR-J4W2-0303B6, check if the main circuit power supply voltage is 48 V DC even though the setting is 24 V DC.	
30.2	Regeneration signal error	(1)	A detection circuit of the servo amplifier is malfunctioning.	Check if the regenerative resistor (regenerative option) is overheating.	It is overheating abnormally.	Replace the servo amplifier.	
30.3	Regeneration feedback signal error	(1)	A detection circuit of the servo amplifier is malfunctioning.	Remove the regenerative option or built-in regenerative resistor, and then check if the alarm occurs at power on. For MR-J4-03A6(-RJ) and MR-J4W2-0303B, check if the alarm occurs at power on.	The alarm occurs.	Replace the servo amplifier.	
					The alarm does not occur.	Check (2).	
		(2)	Something near the device caused it.	Check the noise, ground fault, ambient temperature, etc.	There is a problem in the surrounding.	Take countermeasures against its cause.	

Alarm No.: 31	Name: Overspeed						
Alarm content	The servo motor speed has exceeded the instantaneous permissible speed. The linear servo motor speed has exceeded the instantaneous permissible speed.						
Detail No.	Detail name	Cause		Check method	Check result	Action	Target
31.1	Abnormal motor speed	(1)	The command pulse frequency is high.	Check the command pulse frequency.	The command pulse frequency is high.	Check operation pattern.	[A]
					The command pulse frequency is low.	Check (2).	
		(2)	The settings of the electronic gear are incorrect.	Check the setting value of the electronic gear.	The setting value is incorrect.	Review the settings.	
					The setting value is correct.	Check (5).	
		(3)	The command from the controller is excessive.	Check if the command from the controller is over the permissible speed.	It is over the permissible speed.	Check operation pattern.	[B] [WB] [RJ010] [GF]
					It is less than the permissible speed.	Check (4).	
		(4)	A larger speed command than the overspeed alarm level was inputted.	Check that the actual servo motor speed is higher than the setting value of [Pr. PC08 Overspeed alarm detection level].	The servo motor speed is higher than the overspeed alarm detection level.	Review the [Pr. PC08] setting.	
					The servo motor speed is lower than the overspeed alarm detection level.	Check (5).	
		(5)	The servo motor was at the maximum torque (maximum thrust) at the time of acceleration.	Check if the torque (thrust) at the time of acceleration is the maximum torque (maximum thrust).	It is the maximum torque (maximum thrust).	Increase the acceleration/deceleration time constant. Or reduce the load.	[A] [B] [WB] [RJ010] [GF]
					It is less than the maximum torque (maximum thrust).	Check (6).	
		(6)	The servo system is unstable and oscillating.	Check if the servo motor is oscillating.	It is oscillating.	Adjust the servo gain. Or reduce the load.	
					It is not oscillating.	Check (7).	
		(7)	The velocity waveform has overshot.	Check if it is overshooting because the acceleration time constant is too short.	It is overshooting.	Increase the acceleration/deceleration time constant.	
					It is not overshooting.	Check (8).	
		(8)	For MR-J4-03A6(-RJ) and MR-J4W2-0303B6, the speed has overshot when the power was restored from a temporary bus voltage drop during an operation.	Check if a bus voltage drops temporarily during an operation.	The bus voltage has dropped.	Review the capacity of the 24 V DC main circuit power supply. Increase the voltage of the 24 V DC main circuit power supply within the permissible voltage fluctuation range. Change the main circuit input voltage to 48 V DC. Check operation pattern.	[A] [WB]
					The bus voltage has not dropped.	Check (9).	
		(9)	The connection destination of the encoder cable is incorrect.	Check the connection destinations of CN2A, CN2B, and CN2C.	It is not correct.	Wire it correctly.	[WB]
					It is correct.	Check (10).	
		(10)	The connection of the servo motor is incorrect.	Check the wiring of U/V/W.	It is incorrect.	Set it correctly.	[A] [B] [WB] [RJ010] [GF]
					It is correct.	Check (11).	
		(11)	The encoder or linear encoder is malfunctioning.	Check if the alarm is occurring during less than instantaneous permissible speed.	It is occurring during less than instantaneous permissible speed.	Replace the servo motor or linear encoder.	

Alarm No.: 32		Name: Overcurrent					
Alarm content		A current higher than the permissible current was applied to the servo amplifier.					
Detail No.	Detail name	Cause		Check method	Check result	Action	Target
32.1	Overcurrent detected at hardware detection circuit (during operation)	(1)	The servo amplifier is malfunctioning.	Disconnect the servo motor power cables (U/V/W) and check if the alarm occurs.	It occurs.	Replace the servo amplifier.	[A] [B] [WB] [RJ010] [GF]
					It does not occur.	Check (2).	
		(2)	A ground fault or short occurred at the servo motor power cable.	Check if only the servo motor power cable is shorted.	It is shorted.	Replace the servo motor power cable.	
					It is not shorted.	Check (3).	
		(3)	The servo motor is malfunctioning.	Disconnect the servo motor power cables on motor side, and check insulation of the motor (between U/V/W/⏚/⏚).	A ground fault is occurring.	Replace the servo motor.	
					A ground fault is not occurring.	Check (4).	
		(4)	The dynamic brake is malfunctioning.	Check if the alarm occurs when you turn on the servo-on command.	It occurs.	Replace the servo amplifier.	
					It does not occur.	[WB]: Check (5). [A] [B] [RJ010] [GF]: Check (7).	
		(5)	The connection destination of the encoder cable is incorrect.	Check the connection destinations of CN2A, CN2B, and CN2C.	It is not correct.	Wire it correctly.	[WB]
					It is correct.	Check (6).	
		(6)	Something near the device caused it.	Check the noise, ambient temperature, etc.	There is a problem in the surrounding.	Take countermeasures against its cause.	
		(7)	Something near the device caused it.	Check the noise, ambient temperature, etc.	There is a problem in the surrounding.	Take countermeasures against its cause.	[A] [B] [RJ010] [GF]
					There is no problem in the surrounding.	Check it with the check method for [AL. 45.1].	
32.2	Overcurrent detected at software detection function (during operation)	(1)	The servo gain is high.	Check if an oscillation is occurring.	An oscillation is occurring.	Reduce the speed loop gain ([Pr. PB09]). For MR-J4-03A6(-RJ) and MR-J4W2-0303B6, check if the main circuit power supply voltage is 48 V DC even though the setting is 24 V DC.	[A] [B] [WB] [RJ010] [GF]
					An oscillation is not occurring.	Check (2).	
		(2)	The servo amplifier is malfunctioning.	Disconnect the servo motor power cables (U/V/W) and check if the alarm occurs.	It occurs.	Replace the servo amplifier.	
					It does not occur.	Check (3).	
		(3)	A ground fault or short occurred at the servo motor power cable.	Check if only the servo motor power cable is shorted.	It is shorted.	Replace the servo motor power cable.	
					It is not shorted.	Check (4).	
		(4)	The servo motor is malfunctioning.	Disconnect the servo motor power cables on motor side, and check insulation of the motor (between U/V/W/⏚/⏚).	A ground fault is occurring.	Replace the servo motor.	
					A ground fault is not occurring.	Check (5).	
		(5)	The connection destination of the encoder cable is incorrect.	Check the connection destinations of CN2A, CN2B, and CN2C.	It is not correct.	Connect it correctly.	[WB]
					It is correct.	Check (6).	
		(6)	Something near the device caused it.	Check the noise, ambient temperature, etc.	There is a problem in the surrounding.	Take countermeasures against its cause.	[A] [B] [WB] [RJ010] [GF]

Alarm No.: 32	Name: Overcurrent					
Alarm content	A current higher than the permissible current was applied to the servo amplifier.					
Detail No.	Detail name	Cause	Check method	Check result	Action	Target
32.3	Overcurrent detected at hardware detection circuit (during a stop)	Check it with the check method for [AL. 32.1].				
32.4	Overcurrent detected at software detection function (during a stop)	Check it with the check method for [AL. 32.2].				

Alarm No.: 33	Name: Overvoltage					
Alarm content	The value of the bus voltage exceeded the prescribed value. 200 V class: 400 V DC 400 V class: 800 V DC 100 V class: 400 V DC 48 V DC setting: 75 V DC 24 V DC setting: 55 V DC					
Detail No.	Detail name	Cause	Check method	Check result	Action	Target
33.1	Main circuit voltage error	(1) The setting of the regenerative resistor (regenerative option) is incorrect.	Check the regenerative resistor (regenerative option) and [Pr. PA02] setting.	The setting value is incorrect.	Set it correctly.	[A] [B] [WB] [RJ010] [GF]
				It is set correctly.	Check (2).	
		(2) The regenerative resistor (regenerative option) is not connected.	Check if the regenerative resistor (regenerative option) is connected correctly.	It is not connected correctly.	Connect it correctly.	
				It is connected correctly.	Check (3).	
		(3) Wire breakage of built-in regenerative resistor or regenerative option	Measure the resistance of the built-in regenerative resistor or regenerative option.	The resistance is abnormal.	When using a built-in regenerative resistor, replace the servo amplifier. When using a regenerative option, replace the regenerative option.	
				The resistance is normal.	Check (4).	
		(4) The regeneration capacity is insufficient.	Set a longer deceleration time constant, and then check the repeatability.	It is not repeatable.	When using a built-in regenerative resistor, use a regenerative option. When using a regenerative option, use a larger capacity one.	
				It is repeatable.	Check (5).	
		(5) Power supply voltage high.	Check if the voltage of the input power supply is over the prescribed value. 200 V class: 264 V AC 400 V class: 528 V AC 100 V class: 132 V AC 48 V DC setting: 75 V DC 24 V DC setting: 55 V DC	It is higher than the prescribed value.	Reduce the power supply voltage.	
				It is at the prescribed value or lower.	Check (6).	
		(6) Something near the device caused it.	Check the noise, ambient temperature, etc.	There is a problem in the surrounding.	Take countermeasures against its cause.	

Alarm No.: 34		Name: SSCNET receive error 1					
Alarm content		An error occurred in SSCNET III/H communication. (continuous communication error with 3.5 ms interval)					
Detail No.	Detail name	Cause		Check method	Check result	Action	Target
34.1	SSCNET receive data error	(1)	The SSCNET Ⅲ cable was disconnected.	Check the SSCNET Ⅲ cable connection.	It is disconnected.	Turn off the control circuit power supply of the servo amplifier, and then connect the SSCNET Ⅲ cable.	[B] [WB]
					It is connected.	Check (2).	
		(2)	The surface at the end of SSCNET Ⅲ cable got dirty.	Wipe off the dirt from the cable tip, and then check the repeatability.	It is not repeatable.	Take measure to keep the cable tip clean.	
					It is repeatable.	Check (3).	
		(3)	The SSCNET Ⅲ cable is broken or severed.	Check if the SSCNET Ⅲ cable is malfunctioning.	It has a failure.	Replace the SSCNET Ⅲ cable.	
					It has no failure.	Check (4).	
		(4)	A vinyl tape is stacked to the SSCNET Ⅲ cable. Or a wire insulator containing migrating plasticizer is adhered to the cable.	Check if a vinyl tape is used. Check if the cable is contacting with other cables.	It is used. They are in contact.	Take countermeasures against its cause.	
					It is not used. They are not in contact.	Check (5).	
		(5)	The servo amplifier is malfunctioning.	Replace the servo amplifier, and then check the repeatability.	It is not repeatable.	Replace the servo amplifier.	
					It is repeatable.	Check (6).	
		(6)	The previous or next axis servo amplifier of the alarm occurred is malfunctioning.	Replace the previous and next servo amplifier of the axis alarm occurred, and then check the repeatability.	It is not repeatable.	Replace the servo amplifier.	
					It is repeatable.	Check (7).	
		(7)	The controller is malfunctioning.	Replace the controller, and then check the repeatability.	It is not repeatable.	Replace the controller.	
					It is repeatable.	Check (8).	
		(8)	Something near the device caused it.	Check the noise, ambient temperature, etc.	There is a problem in the surrounding.	Take countermeasures against its cause.	
34.2	SSCNET connector connection error	Check it with the check method for [AL. 34.1].					
34.3	SSCNET communication data error						
34.4	Hardware error signal detection						
34.5	SSCNET receive data error (safety observation function)						
34.6	SSCNET communication data error (safety observation function)						

Alarm No.: 35		Name: Command frequency error					
Alarm content		Input pulse frequency of command pulse is too high.					
Detail No.	Detail name	Cause		Check method	Check result	Action	Target
35.1	Command frequency error	(1)	The command pulse frequency is high.	Check the command pulse frequency.	The command pulse frequency is high.	Check operation pattern.	[A]
					The command pulse frequency is low.	Check (2).	
		(2)	The setting of "Command input pulse train filter selection" in [Pr. PA13] is not correct.	Check if the command pulse frequency is within the setting range of the filter.	It is out of setting range.	Review the filter setting.	
					It is within the setting range.	Check (6).	
		(3)	Inputted frequency with a manual pulse generator is high.	Check the inputted frequency of the manual pulse generator.	The command pulse frequency is high.	Reduce the inputted frequency of the manual pulse generator.	
					The command pulse frequency is low.	Check (6).	
		(4)	The command from the controller is excessive.	Check if the command from the controller is the permissible speed or higher.	It is the permissible speed or higher.	Check operation pattern.	[B] [WB] [RJ010] [GF]
					It is lower than the permissible speed.	Check (5).	
		(5)	The controller is malfunctioning.	Replace the controller, and then check the repeatability.	It is not repeatable.	Replace the controller.	
					It is repeatable.	Check (6).	
		(6)	The command pulse frequency is high when the synchronous encoder axis is selected.	Check the command pulse frequency.	The command pulse frequency is high.	Check operation pattern.	[GF]
					The command pulse frequency is low.	Check (7).	
		(7)	Something near the device caused it.	Check the noise, ambient temperature, etc.	There is a problem in the surrounding.	Take countermeasures against its cause.	[A] [B] [WB] [RJ010] [GF]

Alarm No.: 36		Name: SSCNET receive error 2					
Alarm content		An error occurred in SSCNET III/H communication. (Intermittent communication error with about 70 ms interval)					
Detail No.	Detail name	Cause		Check method	Check result	Action	Target
36.1	Continuous communication data error	(1)	The SSCNET Ⅲ cable was disconnected.	Check the SSCNET Ⅲ cable connection.	It is disconnected.	Turn off the control circuit power supply of the servo amplifier, and then connect the SSCNET Ⅲ cable.	[B] [WB]
					It is connected.	Check (2).	
		(2)	The surface at the end of SSCNET Ⅲ cable got dirty.	Wipe off the dirt from the cable tip, and then check the repeatability.	It is not repeatable.	Take measure to keep the cable tip clean.	
					It is repeatable.	Check (3).	
		(3)	The SSCNET Ⅲ cable is broken or severed.	Check if the SSCNET Ⅲ cable is malfunctioning.	It has a failure.	Replace the SSCNET Ⅲ cable.	
					It has no failure.	Check (4).	
		(4)	A vinyl tape is stacked to the SSCNET Ⅲ cable. Or a wire insulator containing migrating plasticizer is adhered to the cable.	Check if a vinyl tape is used. Check if the cable is contacting with other cables.	It is used. They are in contact.	Take countermeasures against its cause.	
					It is not used. They are not in contact.	Check (5).	
		(5)	The servo amplifier is malfunctioning.	Replace the servo amplifier, and then check the repeatability.	It is not repeatable.	Replace the servo amplifier.	
					It is repeatable.	Check (6).	
		(6)	The previous or next axis servo amplifier of the alarm occurred is malfunctioning.	Replace the previous and next servo amplifier of the axis alarm occurred, and then check the repeatability.	It is not repeatable.	Replace the servo amplifier.	
					It is repeatable.	Check (7).	
		(7)	The controller is malfunctioning.	Replace the controller, and then check the repeatability.	It is not repeatable.	Replace the controller.	
					It is repeatable.	Check (8).	
		(8)	Something near the device caused it.	Check the noise, ambient temperature, etc.	There is a problem in the surrounding.	Take countermeasures against its cause.	
36.2	Continuous communication data error (safety observation function)	Check it with the check method for [AL. 36.1].					

Alarm No.: 37		Name: Parameter error					
Alarm content		Parameter setting is incorrect. Point table setting is incorrect.					
Detail No.	Detail name	Cause		Check method	Check result	Action	Target
37.1	Parameter setting range error	(1)	A parameter was set out of setting range.	Check the parameter error No. and setting value.	It is out of setting range.	Set it within the range.	[A] [B] [WB] [RJ010] [GF]
					It is within the setting range.	Check (2).	
		(2)	A parameter setting contradicts another.	Check the parameter error No. and setting value.	A setting value is incorrect.	Correct the setting value.	
					A setting value is correct.	Check (3).	
		(3)	The parameter setting has changed due to a servo amplifier malfunction.	Replace the servo amplifier, and then check the repeatability.	It is not repeatable.	Replace the servo amplifier.	
37.2	Parameter combination error	(1)	A parameter setting contradicts another.	Check the parameter error No. and setting value.	A setting value is incorrect.	Correct the setting value. (When the master-slave function is set, also check (2).)	
		(2)	[Pr. PA01] on the master side was set to other than "standard control mode" or "fully closed loop control mode".	Check the parameter setting.	[Pr. PA01] is set to other than "standard control mode" or "fully closed loop control mode".	Set [Pr. PA01] to "standard control mode" or "fully closed loop control mode".	[B] (master)
					[Pr. PA01] is set to "standard control mode" or "fully closed loop control mode".	Check (4).	
		(3)	[Pr. PA01] on the slave side was set to other than "standard control mode".	Check the parameter setting.	[Pr. PA01] is set to other than "standard control mode".	Set [Pr. PA01] to "standard control mode".	[B] (slave)
					[Pr. PA01] is set to "standard control mode".	Check (4).	
		(4)	"Forced stop deceleration function selection" in [Pr. PA04] is enabled.	Check the parameter setting.	"Forced stop deceleration function selection" setting in [Pr. PA04] is enabled.	Disable "forced stop deceleration function selection" in [Pr. PA04].	[B] (master) (slave)
37.3	Point table setting error	(1)	The setting of point tables is incorrect.	Check if the setting of point tables is within the setting range. Check the parameter error No. and point table error No. with the point table error No. display on the display of the servo amplifier. Or check the setting value with the point table display of MR Configurator2.	A setting value is incorrect.	Correct the setting value.	[A] [GF]
					A setting value is correct.	Check (2).	
		(2)	A point table setting has changed due to a servo amplifier malfunction.	Replace the servo amplifier, and then check the repeatability.	It is not repeatable.	Replace the servo amplifier.	

Alarm No.: 39		Name: Program error					
Alarm content		· A program used for the program operation is incorrect.					
Detail No.	Detail name	Cause		Check method	Check result	Action	Target
39.1	Program error	(1)	A checksum of the program did not match at power-on. (The program has an error.)	Check if an error occurred (such as entered noise, power-off) at program write.	It has a failure.	Rewrite the program.	[A]
					It has no failure.	Check (2).	
		(2)	A program has changed due to a servo amplifier malfunction.	Replace the servo amplifier, and then check the repeatability.	It is not repeatable.	Replace the servo amplifier.	
39.2	Instruction argument external error	(1)	A program has never been written since program initialization.	Check if a program was written.	It was not executed.	Write the program.	
					It was executed.	Check (2).	
		(2)	A command argument is using a value out of specifications.	Check if the command description has a failure.	It has a failure.	Correct the command description.	
					It has no failure.	Check (3).	
		(3)	A program has changed due to a servo amplifier malfunction.	Replace the servo amplifier, and then check the repeatability.	It is not repeatable.	Replace the servo amplifier.	
39.3	Register No. error	(1)	A specified number of the general purpose register used for a command is a value out of specifications.	Check if the command description has a failure.	It has a failure.	Correct the command description.	
					It has no failure.	Check (2).	
		(2)	A program has changed due to a servo amplifier malfunction.	Replace the servo amplifier, and then check the repeatability.	It is not repeatable.	Replace the servo amplifier.	
39.4	Non-correspondence instruction error	(1)	A used command is not correspondent to the program.	Check if the command description has a failure.	It has a failure.	Correct the command description.	
					It has no failure.	Check (2).	
		(2)	A program has changed due to a servo amplifier malfunction.	Replace the servo amplifier, and then check the repeatability.	It is not repeatable.	Replace the servo amplifier.	

Alarm No.: 3A		Name: Inrush current suppression circuit error					
Alarm content		The inrush current suppression circuit error was detected.					
Detail No.	Detail name	Cause		Check method	Check result	Action	Target
3A.1	Inrush current suppression circuit error	(1)	Inrush current suppressor circuit is malfunctioning.	Replace the servo amplifier, and then check the repeatability.	It is not repeatable.	Replace the servo amplifier.	[A] [B] [WB] [RJ010] [GF]

Alarm No.: 3D		Name: Parameter setting error for driver communication					
Alarm content		The control parameter setting value for driver communication is incorrect.					
Detail No.	Detail name	Cause		Check method	Check result	Action	Target
3D.1	Parameter combination error for driver communication on slave	(1)	The master transmit data selection for driver communication is not set correctly.	Check the settings of [Pr. PD16] and [Pr. PD17] on the master side.	The setting is incorrect.	Set it correctly.	[B] (slave)
3D.2	Parameter combination error for driver communication on master	Check it with the check method for [AL. 3D.1].					[B] (master)

Alarm No.: 3E	Name: Operation mode error						
Alarm content	The operation mode setting was changed.						
Detail No.	Detail name	Cause		Check method	Check result	Action	Target
3E.1	Operation mode error	(1)	The MR-J4 servo amplifier used in J3 compatibility mode was connected to the other SSCNET Ⅲ/H controller. Or an MR-J4 servo amplifier which was connected to SSCNET Ⅲ/H controller was connected to another SSCNET Ⅲ controller.	Check if the connection was changed to like these.	The connection was changed.	Initialize the servo amplifier with the built-in application software "MR-J4(W)-B mode selection" of MR Configurator2, and then connect the amplifier to the controller.	[B] [WB]
		(2)	The [Pr. PA01] setting value was changed.	Check if [Pr. PA01] was changed.	It was changed.	Set [Pr. PA01] correctly.	
3E.6	Operation mode switch error	(1)	A method of positioning data memorized in the servo amplifier (point table method/program method) is different from the actual positioning mode (point table method/program method).	Check if the positioning mode (point table method/program method) was changed. Positioning mode: [Pr. PA01] "_ _ _ x"	It was changed. (with a purpose)	After changing the positioning mode, initialize the point table method/ program method. (Refer to section 7.2.8 [Pr. PT34] of "MR-J4-_A_-RJ Servo Amplifier Instruction Manual (Positioning Mode)")	[A]
					It was changed by mistake.	Set the positioning mode back to the correct setting.	
3E.8	MR-D30 combination error	(1)	With CC-Link IE Field Network Basic communication selected, MR-D30 functional safety unit was connected.	Check if MR-D30 is connected.	It is connected.	Disconnect MR-D30.	[GF]

Alarm No.: 42	Name: Servo control error (for linear servo motor and direct drive motor)						
Alarm content	A servo control error occurred.						
Detail No.	Detail name	Cause		Check method	Check result	Action	Target
42.1	Servo control error by position deviation	(1)	The linear encoder resolution setting differs from the setting value.	Check the setting of [Pr. PL02] and [Pr. PL03].	The setting is incorrect.	Set it correctly.	[A] [B] [WB] [GF]
					The setting is correct.	Check (2).	
		(2)	The direction of mounting linear encoder is incorrect.	Check polarities of the linear encoder and the linear servo motor.	The mounting direction is incorrect.	Mount it correctly. Review the "encoder pulse count polarity selection" setting of the parameter as required. [A]: [Pr. PC45] [B] [WB] [GF]: [Pr. PC27]	
					The mounting direction is correct.	Check (3).	
		(3)	The connection of the servo motor is incorrect.	Check the wiring.	The wiring is incorrect.	Connect it correctly.	
					The wiring is correct.	Check (4).	
		(4)	The initial magnetic pole detection was not executed.	Execute the magnetic pole detection, and then check the repeatability.	It is not repeatable.	Execute the magnetic pole detection.	
					It is repeatable.	Check (5).	
		(5)	The position deviation exceeded the detection level.	Check the value of droop pulses.	The deviation is large.	Review the operation status. Review the [Pr. PL05] setting depending on circumstances.	

Alarm No.: 42		Name: Servo control error (for linear servo motor and direct drive motor)					
Alarm content		A servo control error occurred.					
Detail No.	Detail name	Cause		Check method	Check result	Action	Target
42.2	Servo control error by speed deviation	(1)	The linear encoder resolution setting differs from the setting value.	Check the setting of [Pr. PL02] and [Pr. PL03].	The setting is incorrect.	Set it correctly.	[A] [B] [WB] [GF]
					The setting is correct.	Check (2).	
		(2)	The direction of mounting linear encoder is incorrect.	Check polarities of the linear encoder and the linear servo motor.	The mounting direction is incorrect.	Mount it correctly. Review the "encoder pulse count polarity selection" setting of the parameter as required. [A]: [Pr. PC45] [B] [WB] [GF]: [Pr. PC27]	
					The mounting direction is correct.	Check (3).	
		(3)	The connection of the servo motor is incorrect.	Check the wiring.	The wiring is incorrect.	Connect it correctly.	
					The wiring is correct.	Check (4).	
		(4)	The initial magnetic pole detection was not executed.	Execute the magnetic pole detection, and then check the repeatability.	It is not repeatable.	Execute the magnetic pole detection.	
					It is repeatable.	Check (5).	
		(5)	The speed deviation exceeded the detection level.	Calculate the deviation between the speed command and actual speed.	The deviation is large.	Review the operation status. Review the [Pr. PL06] setting depending on circumstances.	
42.3	Servo control error by torque/ thrust deviation	(1)	The linear encoder resolution setting differs from the setting value.	Check the setting of [Pr. PL02] and [Pr. PL03].	The setting is incorrect.	Set it correctly.	
					The setting is correct.	Check (2).	
		(2)	The direction of mounting linear encoder is incorrect.	Check polarities of the linear encoder and the linear servo motor.	The mounting direction is incorrect.	Mount it correctly. Review the "encoder pulse count polarity selection" setting of the parameter as required. [A]: [Pr. PC45] [B] [WB] [GF]: [Pr. PC27]	
					The mounting direction is correct.	Check (3).	
		(3)	The connection of the servo motor is incorrect.	Check the wiring.	The wiring is incorrect.	Connect it correctly.	
					The wiring is correct.	Check (4).	
		(4)	The initial magnetic pole detection was not executed.	Execute the magnetic pole detection, and then check the repeatability.	It is not repeatable.	Execute the magnetic pole detection.	
					It is repeatable.	Check (5).	
		(5)	The torque/thrust deviation exceeded the detection level.	Calculate the deviation between the current command and torque/ thrust.	The deviation is large.	Review the operation status. Review the [Pr. PL07] setting depending on circumstances.	

Alarm No.: 42		Name: Fully closed loop control error detection (during fully closed loop control)					
Alarm content		A fully closed loop control error has occurred.					
Detail No.	Detail name	Cause		Check method	Check result	Action	Target
42.8	Fully closed loop control error by position deviation	(1)	The resolution of the load-side encoder setting differs from the setting value.	Check the setting of [Pr. PE04] and [Pr. PE05].	The setting is incorrect.	Set it correctly.	[A] [B] [WB] [GF]
					The setting is correct.	Check (2).	
		(2)	The direction of mounting load-side encoder is incorrect.	Check the mounting direction of the load-side encoder.	The mounting direction is incorrect.	Mount it correctly. Review the "encoder pulse count polarity selection" setting of the parameter as required. [A]: [Pr. PC45] [B] [WB] [GF]: [Pr. PC27]	
					The mounting direction is correct.	Check (3).	
		(3)	The position deviation exceeded the detection level.	Check the value of droop pulses.	The deviation is large.	Review the operation status. Review the [Pr. PE07] setting depending on circumstances.	
42.9	Fully closed loop control error by speed deviation	(1)	The resolution of the load-side encoder setting differs from the setting value.	Check the setting of [Pr. PE04] and [Pr. PE05].	The setting is incorrect.	Set it correctly.	
					The setting is correct.	Check (2).	
		(2)	The direction of mounting load-side encoder is incorrect.	Check the mounting direction of the load-side encoder.	The mounting direction is incorrect.	Mount it correctly. Review the "encoder pulse count polarity selection" setting of the parameter as required. [A]: [Pr. PC45] [B] [WB] [GF]: [Pr. PC27]	
					The mounting direction is correct.	Check (3).	
		(3)	The speed deviation exceeded the detection level.	Calculate the deviation between the speed command and actual speed.	The deviation is large.	Review the operation status. Review the [Pr. PE06] setting depending on circumstances.	
42.A	Fully closed loop control error by position deviation during command stop	Check it with the check method for [AL. 42.8]					

Alarm No.: 45		Name: Main circuit device overheat					
Alarm content		Inside of the servo amplifier overheated.					
Detail No.	Detail name	Cause		Check method	Check result	Action	Target
45.1	Main circuit device overheat error 1	(1)	Ambient temperature has exceeded 55 °C.	Check the ambient temperature.	It is over 55 °C.	Lower the ambient temperature.	[A] [B] [WB] [RJ010] [GF]
					It is less than 55 °C.	Check (2).	
		(2)	The close mounting is out of specifications.	Check the specifications of close mounting.	It is out of specifications.	Use within the range of specifications.	
					It is within specifications.	Check (3).	
		(3)	Turning on and off were repeated under the overload status.	Check if the overload status occurred many times.	It occurred.	Check operation pattern.	
					It did not occur.	Check (4).	
		(4)	A cooling fan, heat sink, or openings is clogged with foreign matter.	Clean the cooling fan, heat sink, or openings, and then check the repeatability.	It is not repeatable.	Clean it periodically.	
					It is repeatable.	Check (5).	
		(5)	The servo amplifier is malfunctioning.	Replace the servo amplifier, and then check the repeatability.	It is not repeatable.	Replace the servo amplifier.	
45.2	Main circuit device overheat error 2	(1)	Check it with the check method for [AL. 45.1].				

Alarm No.: 46		Name: Servo motor overheat					
Alarm content		The servo motor overheated.					
Detail No.	Detail name	Cause		Check method	Check result	Action	Target
46.1	Abnormal temperature of servo motor 1	(1)	Ambient temperature of the servo motor has exceeded 40 °C.	Check the ambient temperature of the servo motor.	It is over 40 °C.	Lower the ambient temperature.	[A] [B] [WB] [RJ010] [GF]
					It is less than 40 °C.	Check (2).	
		(2)	Servo motor is overloaded.	Check the effective load ratio.	The effective load ratio is high.	Reduce the load or review the operation pattern.	
					The effective load ratio is small.	Check (3).	
		(3)	The thermal sensor in the encoder is malfunctioning.	Check the servo motor temperature when the alarm occurs.	The servo motor temperature is low.	Replace the servo motor.	

Alarm No.: 46		Name: Servo motor overheat					
Alarm content		The servo motor overheated.					
Detail No.	Detail name	Cause		Check method	Check result	Action	Target
46.2	Abnormal temperature of servo motor 2	(1)	Ambient temperature of the linear servo motor or direct drive motor has exceeded 40 °C.	Check the ambient temperature of the linear servo motor or direct drive motor.	It is over 40 °C.	Lower the ambient temperature.	[A] [B] [WB] [GF]
					It is less than 40 °C.	Check (2).	
		(2)	The linear servo motor or direct drive motor has been under overload status.	Check the effective load ratio.	The effective load ratio is high.	Reduce the load or review the operation pattern.	
					The effective load ratio is small.	Replace the servo motor.	
46.3	Thermistor disconnected error	(1)	In the parallel drive system, the parameter settings and the axis number settings are incorrect.	Check the settings of [Pr. PF37 Parallel drive - Encoder ID setting 1]. Check if the setting of [Pr. PF40 Parallel drive - Servo motor side system setting] matches the setting of the axis number set with the combination of SW2-3, SW2-4, and SW1.	It is not set correctly.	Set the parameter and the axis number correctly.	
					It is set correctly.	Check (2).	
		(2)	In the parallel drive system, the encoder cable from the servo motor is not connected to the encoder master servo amplifier.	Check if the encoder cable from the servo motor is connected to the encoder master servo amplifier.	It is not connected.	Connect the encoder cable of the servo motor to the encoder master servo amplifier. Connect the encoder master servo amplifier and the encoder slave servo amplifier in the order of the axis number.	
					It is connected.	Check (3).	
		(3)	A thermistor wire is not connected.	Check the thermistor wire.	It is not connected.	Connect it correctly.	
					It is connected.	Check (4).	
		(4)	The encoder cable MR-ENECBL_M-H for HF-JP series servo motors is used for the HG-JR22K1M(4) servo motor.	Check the model of the encoder cable.	MR-ENECBL_M-H is used.	Change it to MR-ENECBL_M-H-MTH.	
					MR-ENECBL_M-H-MTH is used.	Check (5).	
		(5)	The thermistor wire is disconnected.	Check the thermistor wire.	It is disconnected.	Repair the lead wire.	
					It is not disconnected.	Replace the servo motor.	
46.4	Thermistor circuit error	(1)	A thermistor circuit of the servo amplifier is malfunctioning.	Replace the servo amplifier, and then check the repeatability.	It is not repeatable.	Replace the servo amplifier.	[A] [B] [WB] [GF]
46.5	Abnormal temperature of servo motor 3	Check it with the check method for [AL. 46.1].					
46.6	Abnormal temperature of servo motor 4	(1)	A current was applied to the servo amplifier in excess of its continuous output current.	Check the effective load ratio.	The effective load ratio is high.	Reduce the load or review the operation pattern. Or use a larger capacity motor.	[A] [B] [WB] [RJ010] [GF]

Alarm No.: 47		Name: Cooling fan error					
Alarm content		The speed of the servo amplifier cooling fan decreased. Or the fan speed decreased to the alarm occurrence level or less.					
Detail No.	Detail name	Cause		Check method	Check result	Action	Target
47.1	Cooling fan stop error	(1)	Foreign matter was caught in the cooling fan.	Check if a foreign matter is caught in the cooling fan.	Something has been caught.	Remove the foreign matter.	[A] [B] [WB] [RJ010] [GF]
					Nothing has been caught.	Check (2).	
		(2)	Cooling fan life expired.	Check if the cooling fan is stopping.	It is stopping.	Replace the servo amplifier.	
47.2	Cooling fan speed reduction error	(1)	Foreign matter was caught in the cooling fan.	Check if a foreign matter is caught in the cooling fan.	Something has been caught.	Remove the foreign matter.	
					Nothing has been caught.	Check (2).	
		(2)	Cooling fan life expired.	Check the cooling fan speed.	The fan speed is less than the alarm occurrence level.	Replace the servo amplifier.	

Alarm No.: 50		Name: Overload 1						
Alarm content		Load exceeded overload protection characteristic of servo amplifier.						
Detail No	Detail name	Cause		Check method	Check result	Action	Target	
50.1	Thermal overload error 1 during operation	(1)	The servo motor power cable was disconnected.	Check the servo motor power cable.	It is disconnected.	Repair or replace the servo motor power cable.	[A] [B] [WB] [RJ010] [GF]	
					It is not disconnected.	Check (2).		
		(2)	The connection of the servo motor is incorrect.	Check the wiring of U/V/W.	It is incorrect.	Connect it correctly.		
					It is correct.	Check (3).		
		(3)	The electromagnetic brake has not released. (The electromagnetic brake has been activated.)	Check if the electromagnetic brake is released during operation.	It is not released.	Release the electromagnetic brake.		
					It is released.	Check (4).		
		(4)	The direction of mounting linear encoder is incorrect.	Check polarities of the linear encoder and the linear servo motor.	The mounting direction is incorrect.	Mount it correctly. Review the "encoder pulse count polarity selection" setting of the parameter as required. [A]: [Pr. PC45] [B] [WB] [GF]: [Pr. PC27]	[A] [B] [WB] [GF]	
					The mounting direction is correct.	Check (5).		
		(5)	A current was applied to the servo amplifier in excess of its continuous output current.	Check the effective load ratio.	The effective load ratio is high.	Reduce the load. Or use a larger capacity motor.	[A] [B] [WB] [RJ010] [GF]	
					The effective load ratio is small.	Check (6).		
		(6)	The connection destination of the encoder cable is incorrect.	Check the connection destinations of CN2A, CN2B, and CN2C.	It is not correct.	Connect it correctly.	[WB]	
					It is correct.	Check (7).		
		(7)	The servo system is unstable and resonating.	Check if it is resonating.	It is resonating.	Adjust gains. For MR-J4-03A6(-RJ) and MR-J4W2-0303B6, check if the main circuit power supply voltage is 48 V DC even though the setting is 24 V DC.	[A] [B] [WB] [RJ010] [GF]	
					It is not resonating.	Check (8).		
		(8)	The servo amplifier is malfunctioning.	Replace the servo amplifier, and then check the repeatability.	It is not repeatable.	Replace the servo amplifier.		
					It is repeatable.	Check (9).		
		(9)	The encoder or linear encoder is malfunctioning.	Replace the servo motor or linear encoder, and then check the repeatability.	It is not repeatable.	Replace the servo motor or linear encoder.		
50.2	Thermal overload error 2 during operation	Check it with the check method for [AL. 50.1].						
50.3	Thermal overload error 4 during operation							

Alarm No.: 50		Name: Overload 1					
Alarm content		Load exceeded overload protection characteristic of servo amplifier.					
Detail No.	Detail name	Cause		Check method	Check result	Action	Target
50.4	Thermal overload error 1 during a stop	(1)	A moving part collided against the machine.	Check if it collided.	It collided.	Check operation pattern.	[A] [B] [WB] [RJ010] [GF]
					It did not collide.	Check (2).	
		(2)	The servo motor power cable was disconnected.	Check the servo motor power cable.	It is disconnected.	Repair or replace the servo motor power cable.	
					It is not disconnected.	Check (3).	
		(3)	Hunting occurs during servo-lock.	Check if the hunting is occurring.	The hunting is occurring.	Adjust gains.	
					The hunting is not occurring.	Check (4).	
		(4)	The electromagnetic brake has not released. (The electromagnetic brake has been activated.)	Check if the electromagnetic brake is released.	It is not released.	Release the electromagnetic brake.	
					It is released.	Check (5).	
		(5)	The direction of mounting linear encoder is incorrect.	Check polarities of the linear encoder and the linear servo motor.	The mounting direction is incorrect.	Mount it correctly. Review the "encoder pulse count polarity selection" setting of the parameter as required. [A]: [Pr. PC45] [B] [WB] [GF]: [Pr. PC27]	[A] [B] [WB] [GF]
					The mounting direction is correct.	Check (6).	
		(6)	A current was applied to the servo amplifier in excess of its continuous output current.	Check the effective load ratio.	The effective load ratio is high.	Reduce the load. Or use a larger capacity motor.	[A] [B] [WB] [RJ010] [GF]
					The effective load ratio is small.	Check (7).	
		(7)	The connection destination of the encoder cable is incorrect.	Check the connection destinations of CN2A, CN2B, and CN2C.	It is not correct.	Connect it correctly.	[WB]
					It is correct.	Check (8).	
		(8)	The servo system is unstable and resonating.	Check if it is resonating.	It is resonating.	Adjust gains.	[A] [B] [WB] [RJ010] [GF]
					It is not resonating.	Check (9).	
		(9)	The servo amplifier is malfunctioning.	Replace the servo amplifier, and then check the repeatability.	It is not repeatable.	Replace the servo amplifier.	
					It is repeatable.	Check (10).	
		(10)	The encoder, servo motor, or linear encoder is malfunctioning.	Replace the servo motor or linear encoder, and then check the repeatability.	It is not repeatable.	Replace the servo motor or linear encoder.	
50.5	Thermal overload error 2 during a stop	Check it with the check method for [AL. 50.4].					
50.6	Thermal overload error 4 during a stop						

Alarm No.: 51		Name: Overload 2					
Alarm content		Maximum output current flowed continuously due to machine collision or the like.					
Detail No	Detail name	Cause		Check method	Check result	Action	Target
51.1	Thermal overload error 3 during operation	(1)	The servo motor power cable was disconnected.	Check the servo motor power cable.	It is disconnected.	Repair or replace the servo motor power cable.	[A] [B] [WB] [RJ010] [GF]
					It is not disconnected.	Check (2).	
		(2)	The connection of the servo motor is incorrect.	Check the wiring of U/V/W.	It is incorrect.	Connect it correctly.	
					It is correct.	Check (3).	
		(3)	The connection of the encoder cable is incorrect.	Check if the encoder cable is connected correctly.	It is incorrect.	Connect it correctly.	
					It is correct.	Check (4).	
		(4)	The direction of mounting linear encoder is incorrect.	Check polarities of the linear encoder and the linear servo motor.	The mounting direction is incorrect.	Mount it correctly. Review the "encoder pulse count polarity selection" setting of the parameter as required. [A]: [Pr. PC45] [B] [WB] [GF]: [Pr. PC27]	[A] [B] [WB] [GF]
					The mounting direction is correct.	Check (5).	
		(5)	The torque is insufficient.	Check the peak load ratio.	The torque is saturated.	Reduce the load or review the operation pattern. Or use a larger capacity motor.	[A] [B] [WB] [RJ010] [GF]
					The torque is not saturated.	Check (6).	
		(6)	The servo amplifier is malfunctioning.	Replace the servo amplifier, and then check the repeatability.	It is not repeatable.	Replace the servo amplifier.	
					It is repeatable.	Check (7).	
		(7)	An encoder or servo motor is malfunctioning.	Replace the servo motor, and then check the repeatability.	It is not repeatable.	Replace the servo motor.	
51.2	Thermal overload error 3 during a stop	(1)	A moving part collided against the machine.	Check if it collided.	It collided.	Check operation pattern.	
					It did not collide.	Refer to (2).	
		(2)	The servo motor power cable was disconnected.	Check it with the check method for [AL. 51.1].			
		(3)	The connection of the servo motor is incorrect.				
		(4)	The connection of the encoder cable is incorrect.				
		(5)	The direction of mounting linear encoder is incorrect.				
		(6)	The torque is saturated.				
		(7)	The servo amplifier is malfunctioning.				
		(8)	An encoder is malfunctioning.				

Alarm No.: 52		Name: Error excessive					
Alarm content		Droop pulses have exceeded the alarm occurrence level.					
Detail No.	Detail name	Cause		Check method	Check result	Action	Target
52.1	Excess droop pulse 1	(1)	The servo motor power cable was disconnected.	Check the servo motor power cable.	It is disconnected.	Repair or replace the servo motor power cable.	[A] [B] [WB] [RJ010] [GF]
					It is not disconnected.	Check (2).	
		(2)	The connection of the servo motor is incorrect.	Check the wiring of U/V/W.	It is incorrect.	Connect it correctly.	
					It is correct.	Check (3).	
		(3)	The connection of the encoder cable is incorrect.	Check if the encoder cable is connected correctly.	It is incorrect.	Connect it correctly.	
					It is correct.	Check (4).	
		(4)	The torque limit has been enabled.	Check if the limiting torque is in progress.	The limiting torque is in progress.	Increase the torque limit value.	
					The limiting torque is not in progress.	Check (5).	
		(5)	A moving part collided against the machine.	Check if it collided.	It collided.	Check operation pattern.	
					It did not collide.	Check (6).	
		(6)	The electromagnetic brake has not released. (The electromagnetic brake has been activated.)	Check if electromagnetic brake is released.	It is not released.	Release the electromagnetic brake.	
					It is released.	Check (7).	
		(7)	The torque is insufficient.	Check the peak load ratio.	The torque is saturated.	Reduce the load or review the operation pattern. Or use a larger capacity motor.	
					The torque is not saturated.	Check (8).	
		(8)	Power supply voltage dropped.	Check the bus voltage value.	The bus voltage is low.	Check the power supply voltage and power supply capacity.	
					The bus voltage is high.	Check (9).	
		(9)	Acceleration/deceleration time constant is too short.	Set a longer deceleration time constant, and then check the repeatability.	It is not repeatable.	Increase the acceleration/deceleration time constant.	
					It is repeatable.	Check (10).	
		(10)	The position loop gain is small.	Increase the position loop gain, and then check the repeatability.	It is not repeatable.	Increase the position loop gain ([Pr. PB08]).	
					It is repeatable.	Check (11).	
		(11)	The error excessive alarm level was not set correctly.	Check the setting of the error excessive alarm level. [A]: [Pr. PC24], [Pr. PC43] [B] [WB] [RJ010] [GF]: [Pr. PC01], [Pr. PC06]	It is not set correctly.	Set it correctly.	
					It is set correctly.	Check (12).	
		(12)	Servo motor shaft was rotated by external force./ The moving part of the linear servo motor was moved by external force.	Measure the actual position under the servo-lock status.	It is rotated by external force./ It was moved by external force.	Review the machine.	
					It is not rotated by external force./ It was not moved by external force.	Check (13).	
		(13)	The encoder or the servo motor is malfunctioning.	Replace the servo motor, and then check the repeatability.	It is not repeatable.	Replace the servo motor.	
					It is repeatable.	Check (14).	
		(14)	The servo amplifier is malfunctioning.	Replace the servo amplifier, and then check the repeatability.	It is not repeatable.	Replace the servo amplifier.	
52.3	Excess droop pulse 2	Check it with the check method for [AL. 52.1].					

Alarm No.: 52	Name: Error excessive						
Alarm content	· Droop pulses have exceeded the alarm occurrence level.						
Detail No.	Detail name	Cause		Check method	Check result	Action	Target
52.4	Error excessive during 0 torque limit	(1)	The torque limit has been 0.	Check the torque limit value.	The torque limit has been 0.	Do not input a command while the torque limit value is 0.	[A] [B] [WB] [RJ010] [GF]
52.5	Excess droop pulse 3	Check it with the check method for [AL. 52.1].					

Alarm No.: 54	Name: Oscillation detection						
Alarm content	· An oscillation of the servo motor was detected.						
Detail No.	Detail name	Cause		Check method	Check result	Action	Target
54.1	Oscillation detection error	(1)	The servo system is unstable and oscillating.	Check if the servo motor is oscillating. Check the torque ripple with MR Configurator2.	The torque ripple is vibrating.	Adjust the servo gain with the auto tuning. Set the machine resonance suppression filter.	[A] [B] [WB] [RJ010] [GF]
					The torque ripple is not vibrating.	Check (2).	
		(2)	The resonance frequency has changed due to deterioration.	Measure the resonance frequency of the equipment and compare it with the setting value of the machine resonance suppression filter.	The resonance frequency of the equipment is different from the filter setting value.	Change the setting value of the machine resonance suppression filter.	
					The resonance frequency of the equipment is the same as the filter setting value.	Check (3).	
		(3)	The encoder or linear encoder is malfunctioning.	Replace the servo motor or linear encoder, and then check the repeatability.	It is not repeatable.	Replace the servo motor or linear encoder.	

Alarm No.: 56		Name: Forced stop error					
Alarm content		The servo motor does not decelerate normally during forced stop deceleration.					
Detail No.	Detail name	Cause		Check method	Check result	Action	Target
56.2	Over speed during forced stop	(1)	The forced stop deceleration time constant is short. [A]: [Pr. PC51] [B] [WB] [RJ010] [GF]: [Pr. PC24]	Increase the parameter setting value, and then check the repeatability.	It is not repeatable.	Adjust the deceleration time constant.	[A] [B] [WB] [RJ010] [GF]
					It is repeatable.	Check (2).	
		(2)	The torque limit has been enabled.	Check if the limiting torque is in progress.	The limiting torque is in progress.	Review the torque limit value.	
					The limiting torque is not in progress.	Check (3).	
		(3)	The servo system is unstable and oscillating.	Check if the servo motor is oscillating. Check the torque ripple with MR Configurator2.	The torque ripple is vibrating.	Adjust the servo gain. Set the machine resonance suppression filter.	
					The torque ripple is not vibrating.	Check (4).	
		(4)	The encoder or linear encoder is malfunctioning.	Replace the servo motor or linear encoder, and then check the repeatability.	It is not repeatable.	Replace the servo motor or linear encoder.	
56.3	Estimated distance over during forced stop	(1)	The forced stop deceleration time constant is short. [A]: [Pr. PC51] [B] [WB] [RJ010] [GF]: [Pr. PC24]	Increase the parameter setting value, and then check the repeatability.	It is not repeatable.	Adjust the deceleration time constant.	
					It is repeatable.	Check (2).	
		(2)	The torque limit has been enabled.	Check if the limiting torque is in progress.	The limiting torque is in progress.	Review the torque limit value.	
					The limiting torque is not in progress.	Check (3).	
		(3)	The encoder or linear encoder is malfunctioning.	Replace the servo motor or linear encoder, and then check the repeatability.	It is not repeatable.	Replace the servo motor or linear encoder.	
56.4	Forced stop start error	(1)	The SSCNET III cable is disconnected.	Check if the SSCNET III cable is connected correctly.	It is not connected.	Connect it correctly.	[B]
					It is connected.	Check (2).	
		(2)	The SSCNET III cable is malfunctioning.	Check if the SSCNET III cable is disconnected or shorted.	It has a failure.	Replace or repair the cable.	
					It has no failure.	Check (3).	
		(3)	Something near the device caused it.	Check the noise, ambient temperature, vibration, etc.	There is a problem in the surrounding.	Take countermeasures against its cause.	
					There is no problem in the surrounding.	Check (4).	
		(4)	The servo amplifier is malfunctioning.	Replace the servo amplifier, and then check the repeatability.	It is not repeatable.	Replace the servo amplifier.	
					It is repeatable.	Check (5).	
		(5)	The controller is malfunctioning.	Replace the controller, and then check the repeatability.	It is not repeatable.	Replace the controller.	

Alarm No.: 61		Name: Operation error					
Alarm content		An operation of the positioning function failed.					
Detail No.	Detail name	Cause		Check method	Check result	Action	Target
61.1	Point table setting range error	(1)	"1" or "3" was set to the sub function of the last point table (255).	Check if "1" or "3" was set.	It was set.	Review the settings.	[A] [GF]

Alarm No.: 63		Name: STO timing error					
Alarm content		STO input signal turns off while the servo motor is rotating.					
Detail No.	Detail name	Cause		Check method	Check result	Action	Target
63.1	STO1 off	(1)	STO1 was turned off (enabled) under the following speed conditions. 1) Servo motor speed: 50 r/min or more 2) Linear servo motor speed: 50 mm/s or more 3) Direct drive motor speed: 5 r/min or more	Check if STO1 is off (enabled).	It is off (enabled).	Turn on STO1 (disabled).	[A] [B] [WB] [RJ010] [GF]
63.2	STO2 off	(1)	STO2 was turned off (enabled) under the following speed conditions. 1) Servo motor speed: 50 r/min or more 2) Linear servo motor speed: 50 mm/s or more 3) Direct drive motor speed: 5 r/min or more	Check if STO2 is off (enabled).	It is off (enabled).	Turn on STO2 (disabled).	
63.5	STO by functional safety unit	(1)	STO of the functional safety unit was turned off (enabled) under the following speed conditions. 1) Servo motor speed: 50 r/min or more 2) Linear servo motor speed: 50 mm/s or more 3) Direct drive motor speed: 5 r/min or more	Check if STO of the functional safety unit is off (enabled).	It is off (enabled).	Turn on STO (disabled).	[A] [B] [GF]

Alarm No.: 64		Name: Functional safety unit setting error					
Alarm content		A setting of the servo amplifier or functional safety unit was incorrect.					
Detail No.	Detail name	Cause		Check method	Check result	Action	Target
64.1	STO input error	(1)	When a functional safety unit is used, a connector is connected to CN8 of the servo amplifier.	Check the connection of the CN8 connector.	It is connected.	Turn off the control circuit power supply of the servo amplifier, and then remove the connector of CN8.	[A] [B] [GF]
64.2	Compatibility mode setting error	(1)	When a functional safety unit is used, the J3 compatibility mode is set.	Check the parameter setting.	The J3 compatibility mode is set.	The J3 compatibility mode is not supported with the functional safety unit. Set it correctly.	[B]

Alarm No.: 64		Name: Functional safety unit setting error					
Alarm content		A setting of the servo amplifier or functional safety unit was incorrect.					
Detail No.	Detail name	Cause		Check method	Check result	Action	Target
64.3	Operation mode setting error	(1)	The speed observation function turned to be enabled in the fully closed loop control mode, linear servo motor control mode, or DD motor control mode	Check if the parameter setting is correct.	The setting is incorrect.	Set it correctly.	[A] [B] [GF]

Alarm No.: 65		Name: Functional safety unit connection error					
Alarm content		Communication or signal between a functional safety unit and servo amplifier failed.					
Detail No.	Detail name	Cause		Check method	Check result	Action	Target
65.1	Functional safety unit communication error 1	(1)	The functional safety unit came off.	Check the installation of the functional safety unit.	It is disconnected.	Turn off the control circuit power supply of the servo amplifier, and then connect the functional safety unit.	[A] [B] [GF]
					It is connected.	Check (2).	
		(2)	The functional safety unit is malfunctioning.	Replace the functional safety unit, and then check the repeatability.	It is not repeatable.	Replace the functional safety unit.	
					It is repeatable.	Check (3).	
		(3)	The servo amplifier is malfunctioning.	Replace the servo amplifier, and then check the repeatability.	It is not repeatable.	Replace the servo amplifier.	
					It is repeatable.	Check (4).	
		(4)	Something near the device caused it.	Check the noise, ambient temperature, etc.	There is a problem in the surrounding.	Take countermeasures against its cause.	
65.2	Functional safety unit communication error 2	Check it with the check method for [AL. 65.1].					
65.3	Functional safety unit communication error 3						
65.4	Functional safety unit communication error 4						
65.5	Functional safety unit communication error 5						
65.6	Functional safety unit communication error 6						
65.7	Functional safety unit communication error 7						
65.8	Functional safety unit shut-off signal error 1						
65.9	Functional safety unit shut-off signal error 2						

Alarm No.: 66	Name: Encoder initial communication error (safety observation function)						
Alarm content	The connected encoder is not compatible with the servo amplifier. An error has occurred in the communication between an encoder and servo amplifier.						
Detail No.	Detail name	Cause		Check method	Check result	Action	Target
66.1	Encoder initial communication - Receive data error 1 (safety observation function)	(1)	An encoder cable is malfunctioning.	Check if the encoder cable is disconnected or shorted.	It has a failure.	Replace or repair the cable.	[A] [B] [GF]
					It has no failure.	Check (2).	
		(2)	The servo amplifier is malfunctioning.	Replace the servo amplifier, and then check the repeatability.	It is not repeatable.	Replace the servo amplifier.	
					It is repeatable.	Check (3).	
		(3)	An encoder is malfunctioning.	Replace the servo motor, and then check the repeatability.	It is not repeatable.	Replace the servo motor.	
					It is repeatable.	Check (4).	
		(4)	Something near the device caused it.	Check the noise, ambient temperature, vibration, etc.	There is a problem in the surrounding.	Take countermeasures against its cause.	
66.2	Encoder initial communication - Receive data error 2 (safety observation function)	Check it with the check method for [AL. 66.1].					
66.3	Encoder initial communication - Receive data error 3 (safety observation function)						
66.7	Encoder initial communication - Transmission data error 1 (safety observation function)						
66.9	Encoder initial communication - Process error 1 (safety observation function)	(1)	A servo motor with functional safety is not connected.	Check if a servo motor with functional safety is connected.	It is not a servo motor with functional safety.	Connect a servo motor with functional safety.	[A] [B] [GF]
					It is a servo motor with functional safety.	Check (2).	
		(2)	The functional safety unit is malfunctioning.	Replace the functional safety unit, and then check the repeatability.	It is not repeatable.	Replace the functional safety unit.	
					It is repeatable.	Check (3).	
		(3)	The servo amplifier is malfunctioning.	Replace the servo amplifier, and then check the repeatability.	It is not repeatable.	Replace the servo amplifier.	
					It is repeatable.	Check (4).	
		(4)	An encoder is malfunctioning.	Replace the servo motor, and then check the repeatability.	It is not repeatable.	Replace the servo motor.	
					It is repeatable.	Check (5).	
		(5)	Something near the device caused it.	Check the noise, ambient temperature, etc.	There is a problem in the surrounding.	Take countermeasures against its cause.	

Alarm No.: 67		Name: Encoder normal communication error 1 (safety observation function)					
Alarm content		An error has occurred in the communication between an encoder and servo amplifier.					
Detail No.	Detail name	Cause		Check method	Check result	Action	Target
67.1	Encoder normal communication - Receive data error 1 (safety observation function)	(1)	An encoder cable is malfunctioning.	Check if the encoder cable is disconnected or shorted.	It has a failure.	Repair or replace the cable.	[A] [B] [GF]
					It has no failure.	Check (2).	
		(2)	The servo amplifier is malfunctioning.	Replace the servo amplifier, and then check the repeatability.	It is not repeatable.	Replace the servo amplifier.	
					It is repeatable.	Check (3).	
		(3)	An encoder is malfunctioning.	Replace the servo motor, and then check the repeatability.	It is not repeatable.	Replace the servo motor.	
					It is repeatable.	Check (4).	
		(4)	Something near the device caused it.	Check the noise, ambient temperature, vibration, etc.	There is a problem in the surrounding.	Take countermeasures against its cause.	
67.2	Encoder normal communication - Receive data error 2 (safety observation function)	Check it with the check method for [AL. 67.1].					
67.3	Encoder normal communication - Receive data error 3 (safety observation function)						
67.4	Encoder normal communication - Receive data error 4 (safety observation function)						
67.7	Encoder normal communication - Transmission data error 1 (safety observation function)						

Alarm No.: 68	Name: STO diagnosis error						
Alarm content	An error of STO input signal was detected.						
Detail No.	Detail name	Cause		Check method	Check result	Action	Target
68.1	Mismatched STO signal error	(1)	STO1 and STO2 are not inputted correctly.	Check if the STO1 and STO2 of CN8 connector are wired correctly.	It is not wired correctly.	Wire it correctly.	[A] [B] [WB] [GF]
					It is wired correctly.	Check (2).	
		(2)	The input states of STO1 and STO2 are different.	Check the on/off states of STO1 and STO2.	The on/off states of STO1 and STO2 are different.	Set STO1 and STO2 to the same input states.	
					The on/off states of STO1 and STO2 are the same.	Check (3).	
		(3)	The setting of [Pr. PF18 STO diagnosis error detection time] ([Pr. PX43] for when the J3 extension function is used) is incorrect.	Set a longer time in the parameter, and then check the repeatability.	It is not repeatable.	Review the parameter setting.	
					It is repeatable.	Check (4).	
		(4)	The STO circuit is malfunctioning.	Replace the servo amplifier, and then check the repeatability.	It is not repeatable.	Replace the servo amplifier.	
					It is repeatable.	Check (5).	
		(5)	Something near the device caused it.	Check the noise, ambient temperature, etc.	There is a problem in the surrounding.	Take countermeasures against its cause.	

Alarm No.: 69	Name: Command error						
Alarm content	The command position exceeded 32 bits (-2147483648 to 2147483647) when the software limit is activated. The command position exceeded 30 bits (-536870912 to 536870911) from the value that was set when the software limit was activated. After the detection of LSP (Forward rotation stroke end) or LSN (Reverse rotation stroke end), the command position exceeded 30 bits (-536870912 to 536870911) from the detected position. After the detection of FLS (Upper stroke limit) or RLS (Lower stroke limit), the command position exceeded 30 bits (-536870912 to 536870911) from the detected position.						
Detail No.	Detail name	Cause		Check method	Check result	Action	Target
69.1	Forward rotation-side software limit detection - Command excess error	(1)	The command position exceeded 32 bits when the software limit is activated.	Check if the command position is correct.	The command position was set to 32 bits or more.	Set the command position correctly.	[GF]
					The command position was set correctly.	Check (2).	
		(2)	The command position exceeded 30 bits from the value that was set when the software limit was activated.	Check if the parameter settings of the software limit ([Pr. PT15] to [Pr. PT18]) to the command position are correct.	It was set within the command position.	Set [Pr. PT15] to [Pr. PT18] correctly.	
					It was set correctly.	Check (3).	
		(3)	The controller is malfunctioning.	Replace the controller, and then check the repeatability.	It is not repeatable.	Replace the controller.	
					It is repeatable.	Check (4).	
		(4)	Something near the device caused it.	Check the noise, ambient temperature, etc.	There is a problem in the surrounding.	Take countermeasures against its cause.	
69.2	Reverse rotation-side software limit detection - Command excess error	Check it with the check method for [AL. 69.1].					

Alarm No.: 69		Name: Command error					
Alarm content		The command position exceeded 32 bits (-2147483648 to 2147483647) when the software limit is activated. The command position exceeded 30 bits (-536870912 to 536870911) from the value that was set when the software limit was activated. After the detection of LSP (Forward rotation stroke end) or LSN (Reverse rotation stroke end), the command position exceeded 30 bits (-536870912 to 536870911) from the detected position. After the detection of FLS (Upper stroke limit) or RLS (Lower stroke limit), the command position exceeded 30 bits (-536870912 to 536870911) from the detected position.					
Detail No.	Detail name	Cause		Check method	Check result	Action	Target
69.3	Forward rotation stroke end detection - Command excess error	(1)	The command position exceeded 30 bits from the detected position after the detection of LSP (Forward rotation stroke end).	Check the command position.	The command position was set to 30 bits or more.	Check operation pattern.	[GF]
					It was set correctly.	Check (2).	
		(2)	The forward rotation stroke limit switch is not connected to LSP (Forward rotation stroke end).	Check if the limit switch is connected correctly.	It is not connected.	Connect it correctly.	
					It is connected.	Check (3).	
		(3)	The controller is malfunctioning.	Replace the controller, and then check the repeatability.	It is not repeatable.	Replace the controller.	
					It is repeatable.	Check (4).	
		(4)	Something near the device caused it.	Check the noise, ambient temperature, etc.	There is a problem in the surrounding.	Take countermeasures against its cause.	
69.4	Reverse rotation stroke end detection - Command excess error	(1)	The command position exceeded 30 bits from the detected position after the detection of LSN (Reverse rotation stroke end).	Check the command position.	The command position was set to 30 bits or more.	Check operation pattern.	
					It was set correctly.	Check (2).	
		(2)	The reverse rotation stroke limit switch is not connected to LSN (Reverse rotation stroke end).	Check if the limit switch is connected correctly.	It is not connected.	Connect it correctly.	
					It is connected.	Check (3).	
		(3)	The controller is malfunctioning.	Replace the controller, and then check the repeatability.	It is not repeatable.	Replace the controller.	
					It is repeatable.	Check (4).	
		(4)	Something near the device caused it.	Check the noise, ambient temperature, etc.	There is a problem in the surrounding.	Take countermeasures against its cause.	
69.5	Upper stroke limit detection - Command excess error	(1)	The command position exceeded 30 bits from the detected position after the detection of FLS (Upper stroke limit).	Check the command position.	The command position was set to 30 bits or more.	Check operation pattern.	
					It was set correctly.	Check (2).	
		(2)	The upper stroke limit switch is not wired. Or the switch is incorrectly positioned.	Check if the limit switch is wired correctly. Or check if the switch is incorrectly positioned.	It has a failure.	Take countermeasures against its cause.	
					It has no failure.	Check (3).	
		(3)	Something near the device caused it.	Check the noise, ambient temperature, etc.	There is a problem in the surrounding.	Take countermeasures against its cause.	
					There is no problem in the surrounding.	Check (4).	
		(4)	The controller is malfunctioning.	Replace the controller, and then check the repeatability.	It is not repeatable.	Replace the controller.	

Alarm No.: 69		Name: Command error					
Alarm content		· The command position exceeded 32 bits (-2147483648 to 2147483647) when the software limit is activated. · The command position exceeded 30 bits (-536870912 to 536870911) from the value that was set when the software limit was activated. · After the detection of LSP (Forward rotation stroke end) or LSN (Reverse rotation stroke end), the command position exceeded 30 bits (-536870912 to 536870911) from the detected position. · After the detection of FLS (Upper stroke limit) or RLS (Lower stroke limit), the command position exceeded 30 bits (-536870912 to 536870911) from the detected position.					
Detail No.	Detail name	Cause		Check method	Check result	Action	Target
69.6	Lower stroke limit detection - Command excess error	(1)	The command position exceeded 30 bits from the detected position after the detection of RLS (Lower stroke limit).	Check the command position.	The command position was set to 30 bits or more.	Check operation pattern.	[GF]
					It was set correctly.	Check (2).	
		(2)	The lower stroke limit switch is not wired. Or the switch is incorrectly positioned.	Check if the limit switch is wired correctly. Or check if the switch is incorrectly positioned.	It has a failure.	Take countermeasures against its cause.	
					It has no failure.	Check (3).	
		(3)	Something near the device caused it.	Check the noise, ambient temperature, etc.	There is a problem in the surrounding.	Take countermeasures against its cause.	
					There is no problem in the surrounding.	Check (4).	
		(4)	The controller is malfunctioning.	Replace the controller, and then check the repeatability.	It is not repeatable.	Replace the controller.	

Alarm No.: 70		Name: Load-side encoder initial communication error 1					
Alarm content		· An error occurred in the initial communication between the load-side encoder and servo amplifier.					
Detail No.	Detail name	Cause		Check method	Check result	Action	Target
70.1	Load-side encoder initial communication - Receive data error 1	(1)	A load-side encoder cable is malfunctioning.	Check if the load-side encoder cable is disconnected or shorted.	It has a failure.	Replace or repair the cable.	[A] [B] [WB] [GF]
					It has no failure.	Check (2).	
		(2)	When you use an A/B/Z-phase differential output linear encoder, the servo amplifier is not compatible with the linear encoder.	Check if the servo amplifier (MR-J4-_-RJ) is compatible with the A/B/Z-phase differential output linear encoder.	The servo amplifier is not compatible with it.	Use a servo amplifier which is compatible with it.	[A] [B] [GF]
					The servo amplifier is compatible with it.	Check (3).	
		(3)	When you use an A/B/Z-phase differential output linear encoder, the connection with the linear encoder is incorrect.	Check if the wiring of the linear encoder is correct. (Check if it is wired to PSEL.)	The wiring is incorrect.	Wire it correctly.	
					The wiring is correct.	Check (4).	
		(4)	The servo amplifier is malfunctioning.	Replace the servo amplifier, and then check the repeatability.	It is not repeatable.	Replace the servo amplifier.	[A] [B] [WB] [GF]
					It is repeatable.	Check (5).	
		(5)	A load-side encoder is malfunctioning.	Replace the load-side encoder, and then check the repeatability.	It is not repeatable.	Replace the load-side encoder.	
					It is repeatable.	Check (6).	
		(6)	Something near the device caused it.	Check the noise, ambient temperature, vibration, etc.	There is a problem in the surrounding.	Take countermeasures against its cause.	
70.2	Load-side encoder initial communication - Receive data error 2	Check it with the check method for [AL. 70.1].					

Alarm No.: 70		Name: Load-side encoder initial communication error 1					
Alarm content		An error occurred in the initial communication between the load-side encoder and servo amplifier.					
Detail No.	Detail name	Cause		Check method	Check result	Action	Target
70.3	Load-side encoder initial communication - Receive data error 3	(1)	An axis not used is not set as disabled-axis.	Check the setting of the disabling control axis switches (SW2-2/SW2-3/SW2-4).	It is not set as disabled-axis.	Set it as disabled-axis.	[WB]
					It is set as disabled-axis.	Check (2).	
		(2)	The load-side encoder cable was disconnected.	Check if the load-side encoder cable is connected correctly.	It is not connected.	Connect it correctly.	[A] [B] [WB] [GF]
					It is connected.	Check (3).	
		(3)	A load-side encoder cable is malfunctioning.	Check if the load-side encoder cable is disconnected or shorted.	It has a failure.	Replace or repair the cable.	
					It has no failure.	Check (4).	
		(4)	The power voltage has been unstable. (For the load-side encoder with the external power supply input)	Check the power capacity and voltage.	It has a failure.	Review the power and related parts.	
					It has no failure.	Check (5).	
		(5)	The parameter setting of communication method is incorrect. [A]: [Pr. PC44] [B] [GF]: [Pr. PC26]	Check the parameter setting.	The setting is incorrect.	Set it correctly.	[A] [B] [GF]
					The setting is correct.	Check (6).	
		(6)	When you use an A/B/Z-phase differential output linear encoder, the connection with the linear encoder is incorrect.	Check if the wiring of the linear encoder is correct. (Check if it is wired to PSEL.)	The wiring is incorrect.	Wire it correctly.	
					The wiring is correct.	Check (7).	
		(7)	When you use a four-wire type linear encoder, the servo amplifier is not compatible with the four-wire type linear encoder.	Check if the servo amplifier is compatible with the four-wire type linear encoder. (MR-J4-_-RJ)	It is not compatible.	Use a servo amplifier which is compatible with it.	
					It is compatible.	Check (8).	
		(8)	The servo amplifier is malfunctioning.	Replace the servo amplifier, and then check the repeatability.	It is not repeatable.	Replace the servo amplifier.	[A] [B] [WB] [GF]
					It is repeatable.	Check (9).	
		(9)	A load-side encoder is malfunctioning.	Replace the load-side encoder, and then check the repeatability.	It is not repeatable.	Replace the load-side encoder.	
					It is repeatable.	Check (10).	
		(10)	Something near the device caused it.	Check the noise, ambient temperature, vibration, etc.	There is a problem in the surrounding.	Take countermeasures against its cause.	
70.4	Load-side encoder initial communication - Encoder malfunction	(1)	A load-side encoder is malfunctioning.	Replace the load-side encoder, and then check the repeatability.	It is not repeatable.	Replace the load-side encoder.	[B] [WB]
					It is repeatable.	Check (2).	
		(2)	Something near the device caused it.	Check the noise, ambient temperature, vibration, etc.	There is a problem in the surrounding.	Take countermeasures against its cause.	

Alarm No.: 70		Name: Load-side encoder initial communication error 1					
Alarm content		An error occurred in the initial communication between the load-side encoder and servo amplifier.					
Detail No.	Detail name	Cause		Check method	Check result	Action	Target
70.5	Load-side encoder initial communication - Transmission data error 1	(1)	When you use an A/B/Z-phase differential output linear encoder, the wiring of the linear encoder is incorrect.	Check if the A/B-phase pulse signals (PA, PAR, PB, and PBR) of the encoder cable are disconnected or shorted.	It is disconnected or shorted.	Repair the encoder cable.	[A] [B] [GF]
					It is not disconnected or shorted.	Check (2).	
		(2)	A load-side encoder cable is malfunctioning.	Check it with the check method for [AL. 70.1].			[A] [B] [WB] [GF]
		(3)	The servo amplifier is malfunctioning.				
		(4)	A load-side encoder is malfunctioning.				
		(5)	Something near the device caused it.				
70.6	Load-side encoder initial communication - Transmission data error 2	(1)	When you use an A/B/Z-phase differential output linear encoder, the wiring of the linear encoder is incorrect.	Check if the Z-phase pulse signals (PZ/PZR) of the encoder cable are disconnected or shorted.	It is disconnected or shorted.	Repair the encoder cable.	[A] [B] [GF]
					It is not disconnected or shorted.	Check (2).	
		(2)	A load-side encoder cable is malfunctioning.	Check it with the check method for [AL. 70.1].			[A] [B] [WB] [GF]
		(3)	The servo amplifier is malfunctioning.				
		(4)	A load-side encoder is malfunctioning.				
		(5)	Something near the device caused it.				
70.7	Load-side encoder initial communication - Transmission data error 3	Check it with the check method for [AL. 70.1].					
70.8	Load-side encoder initial communication - Incompatible encoder	(1)	A load-side encoder, which is not compatible with the servo amplifier, was connected.	Check the model of the load-side encoder.	It is not compatible with the servo amplifier.	Use a load-side encoder which is compatible with the servo amplifier.	[B] [WB]
					It is compatible with the servo amplifier.	Check (2).	
		(2)	The software version of the servo amplifier does not support the load-side encoder.	Check if the software version of the servo amplifier supports the load-side encoder.	It is not compatible.	Replace the servo amplifier to one which software version supports the load-side encoder.	
					It is compatible.	Check (3).	
		(3)	A load-side encoder is malfunctioning.	Replace the load-side encoder, and then check the repeatability.	It is not repeatable.	Replace the load-side encoder.	
					It is repeatable.	Replace the servo amplifier.	
70.A	Load-side encoder initial communication - Process error 1	(1)	The servo amplifier is malfunctioning.	Replace the servo amplifier, and then check the repeatability.	It is not repeatable.	Replace the servo amplifier.	[A] [B] [WB] [GF]
					It is repeatable.	Check (2).	
		(2)	A load-side encoder is malfunctioning.	Replace the load-side encoder, and then check the repeatability.	It is not repeatable.	Replace the load-side encoder.	
					It is repeatable.	Check (3).	
		(3)	Something near the device caused it.	Check the noise, ambient temperature, vibration, etc.	There is a problem in the surrounding.	Take countermeasures against its cause.	

Alarm No.: 70		Name: Load-side encoder initial communication error 1				
Alarm content		An error occurred in the initial communication between the load-side encoder and servo amplifier.				
Detail No.	Detail name	Cause	Check method	Check result	Action	Target
70.8	Load-side encoder initial communication - Process error 2	Check it with the check method for [AL. 70.A].				
70.C	Load-side encoder initial communication - Process error 3					
70.D	Load-side encoder initial communication - Process error 4					
70.E	Load-side encoder initial communication - Process error 5					
70.F	Load-side encoder initial communication - Process error 6					

Alarm No.: 71		Name: Load-side encoder normal communication error 1					
Alarm content		An error occurred in the communication between the load-side encoder and servo amplifier.					
Detail No.	Detail name	Cause		Check method	Check result	Action	Target
71.1	Load-side encoder normal communication - Receive data error 1	(1)	A load-side encoder cable is malfunctioning.	Check if the load-side encoder cable is disconnected or shorted.	It has a failure.	Repair or replace the cable.	[A] [B] [WB] [GF]
					It has no failure.	Check (2).	
		(2)	The external conductor of the encoder cable is not connected to the ground plate of the connector.	Check if it is connected.	It is not connected.	Connect it correctly.	
					It is connected.	Check (3).	
		(3)	The parameter setting of communication method is incorrect. [A]: [Pr. PC44] [B] [GF]: [Pr. PC26]	Check the parameter setting.	The setting is incorrect.	Set it correctly.	[A] [B] [GF]
					The setting is correct.	Check (4).	
		(4)	The servo amplifier is malfunctioning.	Replace the servo amplifier, and then check the repeatability.	It is not repeatable.	Replace the servo amplifier.	[A] [B] [WB] [GF]
					It is repeatable.	Check (5).	
		(5)	A load-side encoder is malfunctioning.	Replace the load-side encoder, and then check the repeatability.	It is not repeatable.	Replace the load-side encoder.	
					It is repeatable.	Check (6).	
		(6)	Something near the device caused it.	Check the noise, ambient temperature, vibration, etc.	There is a problem in the surrounding.	Take countermeasures against its cause.	

Alarm No.: 71		Name: Load-side encoder normal communication error 1				
Alarm content		An error occurred in the communication between the load-side encoder and servo amplifier.				
Detail No.	Detail name	Cause	Check method	Check result	Action	Target
71.2	Load-side encoder normal communication - Receive data error 2	Check it with the check method for [AL. 71.1].				
71.3	Load-side encoder normal communication - Receive data error 3					
71.5	Load-side encoder normal communication - Transmission data error 1					
71.6	Load-side encoder normal communication - Transmission data error 2					
71.7	Load-side encoder normal communication - Transmission data error 3					
71.9	Load-side encoder normal communication - Receive data error 4					
71.A	Load-side encoder normal communication - Receive data error 5					

Alarm No.: 72		Name: Load-side encoder normal communication error 2					
Alarm content		The load-side encoder detected an error signal.					
Detail No.	Detail name	Cause		Check method	Check result	Action	Target
72.1	Load-side encoder data error 1	(1)	The encoder detected a high speed/acceleration rate due to an oscillation or other factors.	Decrease the loop gain, and then check the repeatability.	It is not repeatable.	Use the encoder with low loop gain.	[A] [B] [WB] [GF]
					It is repeatable.	Check (2).	
		(2)	A load-side encoder is malfunctioning.	Replace the load-side encoder, and then check the repeatability.	It is not repeatable.	Replace the load-side encoder.	
					It is repeatable.	Check (3).	
		(3)	Something near the device caused it.	Check the noise, ambient temperature, vibration, etc.	There is a problem in the surrounding.	Take countermeasures against its cause.	
72.2	Load-side encoder data update error	(1)	A load-side encoder is malfunctioning.	Replace the load-side encoder, and then check the repeatability.	It is not repeatable.	Replace the load-side encoder.	
					It is repeatable.	Check (2).	
		(2)	Something near the device caused it.	Check the noise, ambient temperature, etc.	There is a problem in the surrounding.	Take countermeasures against its cause.	
72.3	Load-side encoder data waveform error	Check it with the check method for [AL. 72.2].					
72.4	Load-side encoder non-signal error	(1)	A signal of the load-side encoder has not been inputted.	Check if the load-side encoder cable is wired correctly.	It has a failure.	Review the wiring.	[A] [B] [WB] [GF]
					It has no failure.	Check (2).	
		(2)	Something near the device caused it.	Check the noise, ambient temperature, etc.	There is a problem in the surrounding.	Take countermeasures against its cause.	
72.5	Load-side encoder hardware error 1	Check it with the check method for [AL. 72.2].					
72.6	Load-side encoder hardware error 2						
72.9	Load-side encoder data error 2	Check it with the check method for [AL. 72.1].					

Alarm No.: 74		Name: Option card error 1					
Alarm content		MR-J3-T10 came off. MR-J3-T10 is not properly recognized.					
Detail No.	Detail name	Cause		Check method	Check result	Action	Target
74.1	Option card error 1	(1)	The MR-J3-T10 came off during the CC-Link IE communication.	Check if the MR-J3-T10 is mounted correctly.	It is not mounted correctly.	Install it correctly.	[RJ010]
					It is mounted correctly.	Check (2).	
		(2)	MR-J3-T10 is malfunctioning.	Replace the MR-J3-T10, and then check the repeatability.	It is not repeatable.	Replace the MR-J3-T10.	
					It is repeatable.	Check (3).	
		(3)	The servo amplifier is malfunctioning.	Replace the servo amplifier, and then check the repeatability.	It is not repeatable.	Replace the servo amplifier.	

Alarm No.: 74		Name: Option card error 1					
Alarm content		· MR-J3-T10 came off. · MR-J3-T10 is not properly recognized.					
Detail No.	Detail name	Cause		Check method	Check result	Action	Target
74.2	Option card error 2	Check it with the check method for [AL. 74.1].					
74.3	Option card error 3						
74.4	Option card error 4						
74.5	Option card error 5						

Alarm No.: 75		Name: Option card error 2					
Alarm content		· MR-J3-T10 came off.					
Detail No.	Detail name	Cause		Check method	Check result	Action	Target
75.3	Option card connection error	(1)	MR-J3-T10 came off.	Check if the MR-J3-T10 is mounted correctly.	It is not mounted correctly.	Install it correctly.	[RJ010]
					It is mounted correctly.	Check (2).	
		(2)	MR-J3-T10 is malfunctioning.	Replace the MR-J3-T10, and then check the repeatability.	It is not repeatable.	Replace the MR-J3-T10.	
					It is repeatable.	Check (3).	
		(3)	The servo amplifier is malfunctioning.	Replace the servo amplifier, and then check the repeatability.	It is not repeatable.	Replace the servo amplifier.	
75.4	Option card disconnected	(1)	MR-J3-T10 was not connected correctly.	Check if the MR-J3-T10 is mounted correctly.	It is not mounted correctly.	Install it correctly.	
					It is mounted correctly.	Check (2).	
		(2)	MR-J3-T10 is malfunctioning.	Replace the MR-J3-T10, and then check the repeatability.	It is not repeatable.	Replace the MR-J3-T10.	
					It is repeatable.	Check (3).	
		(3)	The servo amplifier is malfunctioning.	Replace the servo amplifier, and then check the repeatability.	It is not repeatable.	Replace the servo amplifier.	

Alarm No.: 79		Name: Functional safety unit diagnosis error					
Alarm content		· A diagnosis of the functional safety unit failed.					
Detail No.	Detail name	Cause		Check method	Check result	Action	Target
79.1	Functional safety unit power voltage error	(1)	The power supply of the functional safety unit is failure.	Check the installation of the functional safety unit.	It has a failure.	Install it correctly.	[A] [B] [GF]
					It has no failure.	Check (2).	
		(2)	The functional safety unit is malfunctioning.	Replace the functional safety unit, and then check the repeatability.	It is not repeatable.	Replace the functional safety unit.	
					It is repeatable.	Check (3).	
		(3)	The servo amplifier is malfunctioning.	Replace the servo amplifier, and then check the repeatability.	It is not repeatable.	Replace the servo amplifier.	
					It is repeatable.	Check (4).	
		(4)	Something near the device caused it.	Check the power supply for noise.	There is a problem in the surrounding.	Take countermeasures against its cause.	
79.2	Functional safety unit internal error	(1)	The functional safety unit is malfunctioning.	Replace the functional safety unit, and then check the repeatability.	It is not repeatable.	Replace the functional safety unit.	
					It is repeatable.	Check (2).	
		(2)	Something near the device caused it.	Check the power supply for noise.	There is a problem in the surrounding.	Take countermeasures against its cause.	

Alarm No.: 79		Name: Functional safety unit diagnosis error					
Alarm content		A diagnosis of the functional safety unit failed.					
Detail No.	Detail name	Cause		Check method	Check result	Action	Target
79.3	Abnormal temperature of functional safety unit	(1)	Ambient temperature has exceeded 55 °C.	Check the ambient temperature.	It is over 55 °C.	Lower the ambient temperature.	[A] [B] [GF]
					It is less than 55 °C.	Check (2).	
		(2)	Ambient temperature is less than 0 °C.	Check the ambient temperature.	It is less than 0 °C.	Increase the ambient temperature.	
					It is 0 °C or more.	Check (3).	
		(3)	The close mounting is out of specifications.	Check the specifications of close mounting.	It is out of specifications.	Mount it correctly.	
					It is within specifications.	Check (4).	
		(4)	An opening is clogged up.	Clean the opening and check the repeatability.	It is not repeatable.	Clean it periodically.	
					It is repeatable.	Check (5).	
		(5)	The functional safety unit is malfunctioning.	Replace the functional safety unit, and then check the repeatability.	It is not repeatable.	Replace the functional safety unit.	
					It is repeatable.	Check (6).	
		(6)	Something near the device caused it.	Check the power supply for noise.	There is a problem in the surrounding.	Take countermeasures against its cause.	
79.4	Servo amplifier error	(1)	The functional safety unit came off.	Check the installation of the functional safety unit.	It has a failure.	Install it correctly.	
					It has no failure.	Check (2).	
		(2)	The functional safety unit is malfunctioning.	Replace the functional safety unit, and then check the repeatability.	It is not repeatable.	Replace the functional safety unit.	
					It is repeatable.	Check (3).	
		(3)	The servo amplifier is malfunctioning.	Replace the servo amplifier, and then check the repeatability.	It is not repeatable.	Replace the servo amplifier.	
					It is repeatable.	Check (4).	
		(4)	Something near the device caused it.	Check the noise, ambient temperature, etc.	There is a problem in the surrounding.	Take countermeasures against its cause.	
79.5	Input device error	(1)	A signal of input device is not inputted correctly.	Check if the input device cable is wired correctly.	It has a failure.	Review the wiring.	
					It has no failure.	Check (2).	
		(2)	The input device setting parameter is not set correctly.	Check if the parameter is set correctly.	It is not set correctly.	Review the parameter.	
					It is set correctly.	Check (3).	
		(3)	The test pulse time was not set correctly.	Check the setting of [Pr. PSD26 Input device - Test pulse off time]	The test pulse width is longer than the set value.	Set the value longer.	
					The test pulse width is shorter than the set value.	Check (4).	
		(4)	The functional safety unit is malfunctioning.	Replace the functional safety unit, and then check the repeatability.	It is not repeatable.	Replace the functional safety unit.	
					It is repeatable.	Check (5).	
		(5)	Something near the device caused it.	Check the noise, ambient temperature, etc.	There is a problem in the surrounding.	Take countermeasures against its cause.	

Alarm No.: 79		Name: Functional safety unit diagnosis error					
Alarm content		· A diagnosis of the functional safety unit failed.					
Detail No.	Detail name	Cause		Check method	Check result	Action	Target
79.6	Output device error	(1)	A signal of an output device has not been outputted correctly.	Check if the output device cable is wired correctly. Or check if the load of the output device is within the specifications.	It has a failure.	Review the wiring or load.	[A] [B] [GF]
					It has no failure.	Check (2).	
		(2)	The test pulse time was not set correctly.	Check the setting of [Pr. PSD30 Output device - Test pulse off time].	The test pulse width is longer than the set value.	Set the value longer.	
					The test pulse width is shorter than the set value.	Check (3).	
		(3)	Current of the output device is excessive.	Check if the current is used within prescribed.	Not within prescribed.	Reduce the output current.	
					Within prescribed.	Check (4).	
		(4)	The functional safety unit is malfunctioning.	Replace the functional safety unit, and then check the repeatability.	It is not repeatable.	Replace the functional safety unit.	
					It is repeatable.	Check (5).	
		(5)	Something near the device caused it.	Check the noise, ambient temperature, etc.	There is a problem in the surrounding.	Take countermeasures against its cause.	
79.7	Mismatched input signal error	(1)	A mismatch of input signal DI_A and DI_B continued for a fixed time ([Pr. PSD18] to [Pr. PSD23]).	Check if the input device cable is wired correctly.	It has a failure.	Review the wiring.	
					It has no failure.	Check (2).	
		(2)	An input mismatch time was not set correctly.	Check the settings of [Pr. PSD18 Mismatch permissible time DI1] to [Pr. PSD23 Mismatch permissible time DI6].	The mismatched time is longer than the set value.	Set the value longer.	
					The mismatched time is shorter than the set value.	Check (3).	
		(3)	The functional safety unit is malfunctioning.	Replace the functional safety unit, and then check the repeatability.	It is not repeatable.	Replace the functional safety unit.	
					It is repeatable.	Check (4).	
		(4)	Something near the device caused it.	Check the noise, ambient temperature, etc.	There is a problem in the surrounding.	Take countermeasures against its cause.	
79.8	Position feedback fixing error	(1)	The position feedback data do not change within the position feedback fixing error detection time [Pr. PSA22].	Check the [Pr. PSA22] setting.	It is not set correctly.	Review the parameter.	
					It is set correctly.	Check (2).	
		(2)	The position feedback data do not change.	Check the feedback data by rotating the servo motor.	The position feedback data changes.	Perform an operation which rotates the servo motor within the position feedback fixing error detection time [Pr. PSA22].	
					The position feedback data do not change.	Check (3).	
		(3)	The servo motor is malfunctioning.	Replace the servo motor, and then check the repeatability.	It is not repeatable.	Replace the servo motor.	
					It is repeatable.	Check (4).	
		(4)	The functional safety unit is malfunctioning.	Replace the functional safety unit, and then check the repeatability.	It is not repeatable.	Replace the functional safety unit.	

Alarm No.: 7A		Name: Parameter setting error (safety observation function)					
Alarm content		A parameter of the functional safety unit failed.					
Detail No.	Detail name	Cause		Check method	Check result	Action	Target
7A.1	Parameter verification error (safety observation function)	(1)	A parameter of the functional safety unit is incorrect.	Review the parameter.	It is not repeatable.	Set the parameter correctly.	[A] [B] [GF]
					It is repeatable.	Check (2).	
		(2)	The functional safety unit is malfunctioning.	Replace the functional safety unit, and then check the repeatability.	It is not repeatable.	Replace the functional safety unit.	
					It is repeatable.	Check (3).	
		(3)	Something near the device caused it.	Check the noise, ambient temperature, etc.	There is a problem in the surrounding.	Take countermeasures against its cause.	
7A.2	Parameter setting range error (safety observation function)	(1)	The initial settings for the functional safety unit have not been finished.	Check the [Pr. PSA01] setting.	It is not enabled.	Enable the setting with checking parameter contents.	
					It is enabled.	Check (2).	
		(2)	A parameter of the functional safety unit was set out of range.	Check the value of set parameters.	It is out of setting range.	Set it within the range.	
7A.3	Parameter combination error (safety observation function)	(1)	A parameter of the functional safety unit or servo amplifier is incorrect.	Check the parameter settings of the functional safety unit and servo amplifier. Functional safety unit: [Pr. PSA02], [Pr. PSA18] to [Pr. PSA21], [Pr. PSC03], [Pr. PSD01] to [Pr. PSD17], [Pr. PSD26] Servo amplifier: [Pr. PA14]	It is not set correctly.	Set the parameter correctly.	
7A.4	Functional safety unit combination error (safety observation function)	(1)	A combination of functional safety unit and servo amplifier is incorrect.	Check if correct combination of servo amplifier is connected.	A different servo amplifier is connected.	Return to the servo amplifier which was combined with the functional safety unit and was set the safety observation function, or initialize the setting.	

Alarm No.: 7B		Name: Encoder diagnosis error (safety observation function)					
Alarm content		Error occurred in encoder.					
Detail No.	Detail name	Cause		Check method	Check result	Action	Target
7B.1	Encoder diagnosis error 1 (safety observation function)	(1)	An encoder cable is malfunctioning.	Check if the encoder cable is disconnected or shorted.	It has a failure.	Repair or replace the cable.	[A] [B] [GF]
					It has no failure.	Check (2).	
		(2)	An encoder is malfunctioning.	Replace the servo motor, and then check the repeatability.	It is not repeatable.	Replace the servo motor.	
					It is repeatable.	Check (3).	
		(3)	The functional safety unit is malfunctioning.	Replace the functional safety unit, and then check the repeatability.	It is not repeatable.	Replace the functional safety unit.	
					It is repeatable.	Check (4).	
		(4)	The servo amplifier is malfunctioning.	Replace the servo amplifier, and then check the repeatability.	It is not repeatable.	Replace the servo amplifier.	
					It is repeatable.	Check (5).	
		(5)	Something near the device caused it.	Check the noise, ambient temperature, vibration, etc.	There is a problem in the surrounding.	Take countermeasures against its cause.	

Alarm No.: 7B		Name: Encoder diagnosis error (safety observation function)						
Alarm content		Error occurred in encoder.						
Detail No.	Detail name	Cause		Check method	Check result	Action	Target	
7B.2	Encoder diagnosis error 2 (safety observation function)	Check it with the check method for [AL. 7B.1].						
7B.3	Encoder diagnosis error 3 (safety observation function)							
7B.4	Encoder diagnosis error 4 (safety observation function)	(1)	Ambient temperature of the encoder has exceeded 40 °C.	Check the ambient temperature of the encoder.	It is over 40 °C.	Lower the ambient temperature.	[A] [B] [GF]	
					It is 40 °C or less.	Check (2).		
		(2)	Ambient temperature of the encoder is less than 0 °C.	Check the ambient temperature of the encoder.	It is 0 °C or less.	Increase the ambient temperature.		
					It is 0 °C or more.	Check (3).		
		(3)	Servo motor is overloaded.	Check the effective load ratio.	The effective load ratio is high.	Reduce the load or review the operation pattern.		
					The effective load ratio is small.	Check (4).		
		(4)	The thermal sensor in the encoder is malfunctioning.	Replace the servo motor, and then check the repeatability.	It is not repeatable.	Replace the servo motor.		
					It is repeatable.	Check (5).		
		(5)	The functional safety unit is malfunctioning.	Replace the functional safety unit, and then check the repeatability.	It is not repeatable.	Replace the functional safety unit.		

Alarm No.: 7C		Name: Functional safety unit communication diagnosis error (safety observation function)					
Alarm content		The network communication had an error in the functional safety unit.					
Detail No.	Detail name	Cause		Check method	Check result	Action	Target
7C.1	Functional safety unit communication setting error (safety observation function)	(1)	Communication cycle does not match.	Check the communication cycle setting ([Pr. PSC01]) of the servo system controller and the functional safety unit.	Communication cycle setting is incorrect.	Set it correctly.	[B] [GF]
					Communication cycle setting is correct.	Check (2).	
		(2)	The time taken for the detection of safety communication errors is not set correctly.	Refer to "MR-D30 Instruction Manual" and check the setting.	It is not set correctly.	Set it correctly.	[GF]
					It is set correctly.	Check (3).	
		(3)	The functional safety unit is malfunctioning.	Replace the functional safety unit, and then check the repeatability.	It is not repeatable.	Replace the functional safety unit.	[B] [GF]
					It is repeatable.	Check (4).	
		(4)	Something near the device caused it.	Check the noise, ambient temperature, etc.	There is a problem in the surrounding.	Take countermeasures against its cause.	

Alarm No.: 7C		Name: Functional safety unit communication diagnosis error (safety observation function)					
Alarm content		The network communication had an error in the functional safety unit.					
Detail No.	Detail name	Cause		Check method	Check result	Action	Target
7C.2	Functional safety unit communication data error (safety observation function)	(1)	The time taken for the detection of safety communication errors is not set correctly.	Refer to "MR-D30 Instruction Manual" and check the setting.	It is not set correctly.	Set it correctly.	[GF]
					It is set correctly.	Check (2).	
		(2)	An error occurred at the safety master station side.	Check if an alarm occurs at the safety master station.	It is occurring.	Refer to the troubleshooting for the master station and take countermeasures.	
					It did not occur.	Check (3).	
		(3)	An error occurred at the servo system controller side.	Check if the settings of the servo system controller side are correct.	It has a failure.	Set it correctly.	[B]
					It has no failure.	Check (4).	
		(4)	[B]: Check it with the check method for [AL. 34.1]. [GF]: Check it with the check method for [AL. 8D.1].				[B] [GF]

Alarm No.: 7D		Name: Safety observation error					
Alarm content		The safety observation function detected an error.					
Detail No.	Detail name	Cause		Check method	Check result	Action	Target
7D.1	Stop observation error	(1)	During activation of SOS function, the position of the servo motor has changed by more than the SOS allowance value set by parameter.	Check that the actual servo motor position is higher than the setting value of [Pr. PSA05].	The travel distance of the servo motor is larger than the setting value in [Pr. PSA05].	Review the alarm level.	[A] [B] [GF]
					The travel distance of the servo motor is smaller than the alarm detection level.	Check (2).	
		(2)	During activation of SOS function, the servo motor speed has changed by larger than the SOS allowance value set by parameter, and that state has continued for longer than the set time (specified by [Pr. PSA15]).	The actual servo motor speed is higher than the setting value of [Pr. PSA04].	The servo motor speed is higher than the setting value in [Pr. PSA04].	Review the parameter setting.	
					The servo motor speed is higher than the setting value in [Pr. PSA15] and equal to or lower than that in [Pr. PSA04].	Check (3).	
		(3)	During activation of SOS function, the speed command has changed by larger than the SOS allowance value set by parameter, and that state has continued for longer than the set time (specified by [Pr. PSA15]).	Check if the command from the controller is over the standstill speed set in [Pr. PSA04].	The command from the controller is over the setting valued in [Pr. PSA04].	Check the operation pattern.	
					The command from controller is higher than the setting value in [Pr. PSA15] and equal to or lower than that in [Pr. PSA04].	Check (4).	
		(4)	An encoder is malfunctioning.	Replace the servo motor, and then check the repeatability.	It is not repeatable.	Replace the servo motor.	
					It is repeatable.	Check (5).	
		(5)	The functional safety unit is malfunctioning.	Replace the functional safety unit, and then check the repeatability.	It is not repeatable.	Replace the functional safety unit.	
					It is repeatable.	Check (6).	
		(6)	The servo amplifier is malfunctioning.	Replace the servo amplifier, and then check the repeatability.	It is not repeatable.	Replace the servo motor.	
					It is repeatable.	Check (7).	
		(7)	Something near the device caused it.	Check the noise, ambient temperature, vibration, etc.	There is a problem in the surrounding.	Take countermeasures against its cause.	

Alarm No.: 7D		Name: Safety observation error					
Alarm content		The safety observation function detected an error.					
Detail No.	Detail name	Cause		Check method	Check result	Action	Target
7D.2	Speed observation error	(1)	The command pulse frequency is high.	Check the command pulse frequency.	The command pulse frequency is high.	Check operation pattern.	[A] [B] [GF]
					The command pulse frequency is low.	Check (2).	
		(2)	The settings of the electronic gear are incorrect.	Check the setting value of the electronic gear.	The setting value is incorrect.	Review the settings.	
					The setting value is correct.	Check (3).	
		(3)	The command from the controller is excessive.	Check if the command from the controller is the SLS speed ([Pr. PSA11] to [Pr. PSA14]) or more.	It is over the permissible speed.	Check operation pattern.	
					It is less than the permissible speed.	Check (4).	
		(4)	A larger speed command than the SLS speed ([Pr. PSA11] to [Pr. PSA14]) was inputted.	Check that the actual servo motor speed is higher than the setting value of the SLS speed.	The servo motor speed is higher than the SLS speed.	Review the setting value of the SLS speed.	
					The servo motor speed is lower than the SLS speed.	Check (5).	
		(5)	The servo system is unstable and oscillating.	Check if the servo motor is oscillating.	It is oscillating.	Adjust the servo gain. Or reduce the load.	
					It is not oscillating.	Check (6).	
		(6)	The velocity waveform has overshot.	Check if it is overshooting because the acceleration time constant is too short.	It is overshooting.	Increase the acceleration/deceleration time constant.	
					It is not overshooting.	Check (7).	
		(7)	The connection destination of the encoder cable is incorrect.	Check the connection destination of the encoder.	It is not correct.	Wire it correctly.	
					It is correct.	Check (8).	
		(8)	The encoder or linear encoder is malfunctioning.	Replace the servo motor, and then check the repeatability.	It is not repeatable.	Replace the servo motor.	
					It is repeatable.	Check (9).	
		(9)	The functional safety unit is malfunctioning.	Replace the functional safety unit, and then check the repeatability.	It is not repeatable.	Replace the functional safety unit.	
					It is repeatable.	Check (10).	
		(10)	The servo amplifier is malfunctioning.	Replace the servo amplifier, and then check the repeatability.	It is not repeatable.	Replace the servo amplifier.	
					It is repeatable.	Check (11).	
		(11)	Something near the device caused it.	Check the noise, ambient temperature, etc.	There is a problem in the surrounding.	Take countermeasures against its cause.	

Alarm No.: 82		Name: Master-slave operation error 1				
Alarm content		Driver communication error was detected				
Detail No.	Detail name	Cause	Check method	Check result	Action	Target
82.1	Master-slave operation error 1	Check it with the check method for [AL. 34.1].				[B] (slave)

Alarm No.: 84		Name: Network module initialization error					
Alarm content		· The network module is not connected. · An error occurred at initialization of the network module.					
Detail No.	Detail name	Cause		Check method	Check result	Action	Target
84.1	Network module undetected error	(1)	The network module was disconnected.	Check if the network module is connected correctly.	It is not connected correctly.	Connect it correctly.	[Other]
					It is connected correctly.	Check (2).	
		(2)	Something near the device caused it.	Check the noise, ambient temperature, etc. Refer to "Noise reduction techniques" section in each servo amplifier instruction manual for the noise reduction techniques.	There is a problem in the surrounding.	Take countermeasures against its cause.	
					There is no problem in the surrounding.	Check (3).	
		(3)	The network module is malfunctioning.	Replace the network module, and then check the repeatability.	It is not repeatable.	Replace the network module.	
					It is repeatable.	Check (4).	
		(4)	The servo amplifier is malfunctioning.	Replace the servo amplifier, and then check the repeatability.	It is not repeatable.	Replace the servo amplifier.	
84.2	Network module initialization error 1	(1)	The network module was disconnected.	Check if the network module is connected correctly.	It is not connected correctly.	Connect it correctly.	
					It is connected correctly.	Check (2).	
		(2)	A network module, which is not compatible with the servo amplifier, has been connected.	Check if the network module is compatible with the servo amplifier.	It is not compatible.	Replace with a network module compatible with the servo amplifier.	
					It is compatible.	Check (3).	
		(3)	A network cable was disconnected.	Check if the network cable is connected correctly.	It is not connected.	Connect it correctly.	
					It is connected.	Check (4).	
		(4)	The wiring of the network cable was incorrect.	Check if the wiring of network cable is correct.	The wiring is incorrect.	Wire it correctly.	
					The wiring is correct.	Check (5).	
		(5)	A network cable was disconnected.	Check if the network cable is malfunctioning.	It has a failure.	Replace the network cable.	
					It has no failure.	Check (6).	
		(6)	Something near the device caused it.	Check the noise, ambient temperature, etc. Refer to "Noise reduction techniques" section in each servo amplifier instruction manual for the noise reduction techniques.	There is a problem in the surrounding.	Take countermeasures against its cause.	
					There is no problem in the surrounding.	Check (7).	
		(7)	The network module is malfunctioning.	Replace the network module, and then check the repeatability.	It is not repeatable.	Replace the network module.	
					It is repeatable.	Check (8).	
		(8)	The servo amplifier is malfunctioning.	Replace the servo amplifier, and then check the repeatability.	It is not repeatable.	Replace the servo amplifier.	
84.3	Network module initialization error 2	Check it with the check method for (AL. 84.2).					

Alarm No.: 85		Name: Network module error					
Alarm content		The network module was disconnected. An error occurred in the network module. (Refer to section 1.7.)					
Detail No.	Detail name	Cause		Check method	Check result	Action	Target
85.1	Network module error 1	(1)	The network module was disconnected.	Check if the network module is connected correctly.	It is not connected correctly.	Connect it correctly.	[Other]
					It is connected correctly.	Check (2).	
		(2)	A network cable was disconnected.	Check if the network cable is connected correctly.	It is not connected.	Connect it correctly.	
					It is connected.	Check (3).	
		(3)	The wiring of the network cable was incorrect.	Check if the wiring of network cable is correct.	The wiring is incorrect.	Wire it correctly.	
					The wiring is correct.	Check (4).	
		(4)	A network cable was disconnected.	Check if the network cable is malfunctioning.	It has a failure.	Replace the network cable.	
					It has no failure.	Check (5).	
		(5)	The setting of the controller is incorrect.	Check the controller setting.	It is incorrect.	Review the settings.	
					It is correct.	Check (6).	
		(6)	Something near the device caused it.	Check the noise, ambient temperature, etc. Refer to "Noise reduction techniques" section in each servo amplifier instruction manual for the noise reduction techniques.	There is a problem in the surrounding.	Take countermeasures against its cause.	
					There is no problem in the surrounding.	Check (7).	
		(7)	The network module is malfunctioning.	Replace the network module, and then check the repeatability.	It is not repeatable.	Replace the network module.	
					It is repeatable.	Check (8).	
		(8)	The servo amplifier is malfunctioning.	Replace the servo amplifier, and then check the repeatability.	It is not repeatable.	Replace the servo amplifier.	
					It is repeatable.	Check (9).	
		(9)	The controller is malfunctioning.	Replace the controller, and then check the repeatability.	It is not repeatable.	Replace the controller.	
85.2	Network module error 2	Check it with the check method for [AL. 85.1]					
85.3	Network module error 3						

Alarm No.: 86	Name: Network communication error						
Alarm content	· An error occurred in the network module. · An error occurred in the network communication.						
Detail No.	Detail name	Cause		Check method	Check result	Action	Target
86.1	Network communication error 1	(1)	The network module was disconnected.	Check if the network module is connected correctly.	It is not connected correctly.	Connect it correctly.	[Other]
					It is connected correctly.	Check (2).	
		(2)	A network cable was disconnected.	Check if the network cable is connected correctly.	It is not connected.	Turn off the control circuit power supply of the servo amplifier, and then connect the network cable correctly.	[GF] [Other]
					It is connected.	Check (3).	
		(3)	The wiring of the network cable was incorrect.	Check if the wiring of network cable is correct.	The wiring is incorrect.	Wire it correctly.	
					The wiring is correct.	Check (4).	
		(4)	A network cable was disconnected.	Check if the network cable is malfunctioning.	It has a failure.	Replace the network cable.	
					It has no failure.	Check (5).	
		(5)	The network was disconnected by a wrong procedure.	Check if the network was disconnected according to the kind of network.	It was not performed.	Perform it.	
					It was performed.	Check (6).	
		(6)	Data transmission from the controller was interrupted for a certain period of time.	Check if data transmission from the controller is not interrupted.	It is interrupted.	Review the controller communication setting.	
					It is not interrupted.	Check (7).	
		(7)	The setting of the controller is incorrect.	Check the controller setting.	It is incorrect.	Review the settings.	
					It is correct.	Check (8).	
		(8)	Something near the device caused it.	Check the noise, ambient temperature, etc. Refer to "Noise reduction techniques" section in each servo amplifier instruction manual for the noise reduction techniques.	There is a problem in the surrounding.	Take Countermeasures against its cause.	
					There is no problem in the surrounding.	Check (9).	
		(9)	The network module is malfunctioning.	Replace the network module, and then check the repeatability.	It is not repeatable.	Replace the network module.	[Other]
					It is repeatable.	Check (10).	
		(10)	The servo amplifier is malfunctioning.	Replace the servo amplifier, and then check the repeatability.	It is not repeatable.	Replace the servo amplifier.	[GF] [Other]
					It is repeatable.	Check (11).	
		(11)	The controller is malfunctioning.	Replace the controller, and then check the repeatability.	It is not repeatable.	Replace the controller.	
86.2	Network communication error 2	Check it with the check method for [AL. 86.1].					
86.3	Network communication error 3						
86.4	Network communication error 4						

Alarm No.: 8A		Name: USB communication time-out error/serial communication time-out error/Modbus RTU communication time-out error					
Alarm content		Communication between the servo amplifier and a personal computer/controller stopped for the specified time or longer. An error occurred in USB communication, serial communication (Mitsubishi Electric general-purpose AC servo protocol), or Modbus RTU communication.					
Detail No.	Detail name	Cause		Check method	Check result	Action	Target
8A.1	USB communication time-out error/ serial communication time-out error	(1)	Communication commands have not been transmitted.	Check if a command was transmitted from the personal computer, etc.	It was not transmitted.	Transmit a command.	[A] [B] [WB] [RJ010] [GF]
					It was transmitted.	Check (2).	
		(2)	A communication cable was disconnected.	Replace the communication cable, and then check the repeatability.	It is not repeatable.	Replace the communication cable.	
					It is repeatable.	Check (3).	
		(3)	The servo amplifier is malfunctioning.	Replace the servo amplifier, and then check the repeatability.	It is not repeatable.	Replace the servo amplifier.	
8A.2	Modbus RTU communication time-out error	(1)	Communication commands have not been transmitted.	Check if a command was transmitted from the controller, etc.	It was not transmitted.	Transmit a command.	[A]
					It was transmitted.	Check (2).	
		(2)	A communication cable was disconnected.	Replace the communication cable, and then check the repeatability.	It is not repeatable.	Replace the communication cable.	
					It is repeatable.	Check (3).	
		(3)	The servo amplifier is malfunctioning.	Replace the servo amplifier, and then check the repeatability.	It is not repeatable.	Replace the servo amplifier.	

Alarm No.: 8D		Name: CC-Link IE communication error					
Alarm content		MR-J3-T10 came off. An error occurred in CC-Link IE communication.					
Detail No.	Detail name	Cause		Check method	Check result	Action	Target
8D.1	CC-Link IE communication error 1	(1)	The MR-J3-T10 came off during the CC-Link IE communication.	Check if [AL. 74 Option card error 1] occurred with alarm history.	It is occurring.	Check it with the check method for [AL. 74].	[RJ010]
					It did not occur.	Check (2).	
		(2)	The Ethernet cable was disconnected.	Check the Ethernet cable connection.	It is disconnected.	Turn off the control circuit power supply of the servo amplifier, and then connect the Ethernet cable.	[RJ010] [GF]
					It is connected.	Check (3).	
		(3)	The CC-Link IE communication was disconnected by using a wrong procedure.	Check if the communication was disconnected by using the correct procedure.	The communication was disconnected by using a wrong procedure.	Follow the correct procedure for disconnecting the communication.	
					The communication was disconnected by using the correct procedure.	Check (4).	
		(4)	The wiring of the Ethernet cable was incorrect.	Check if the wiring of Ethernet cable is correct.	The wiring is incorrect.	Wire it correctly.	
					The wiring is correct.	Check (5).	
		(5)	An Ethernet cable was disconnected.	Check if the Ethernet cable is malfunctioning.	It has a failure.	Replace the Ethernet cable.	
					It has no failure.	Check (6).	
		(6)	The transmission status of the CC-Link IE communication is abnormal.	Check the noise, ambient temperature, etc.	It has a failure.	Take countermeasures against its cause.	
					It has no failure.	Check (7).	
		(7)	MR-J3-T10 is malfunctioning.	Replace the MR-J3-T10, and then check the repeatability.	It is not repeatable.	Replace the MR-J3-T10.	
					It is repeatable.	Check (8).	
		(8)	The servo amplifier is malfunctioning.	Replace the servo amplifier, and then check the repeatability.	It is not repeatable.	Replace the servo amplifier.	[RJ010]
					It is repeatable.	Check (9).	
		(9)	The master station is malfunctioning.	Check if the master station is malfunctioning.	It has a failure.	Replace the master station.	[RJ010] [GF]
8D.2	CC-Link IE communication error 2	Check it with the check method for [AL. 8D.1].					
8D.3	Master station setting error 1	(1)	The station No. is set to a value other than 1 to 120 with the master station.	Check the [Pr. Po02] setting.	The setting value is incorrect.	Set it correctly.	[RJ010]
					The setting value is correct.	Check (2).	
		(2)	The network number is set to a value other than 1 to 239 with the master station.	Check the [Pr. Po03] setting.	The setting value is incorrect.	Set it correctly.	
					The setting value is correct.	Check (3).	
		(3)	MR-J3-T10 is malfunctioning.	Replace the MR-J3-T10, and then check the repeatability.	It is not repeatable.	Replace the MR-J3-T10.	
					It is repeatable.	Check (4).	
		(4)	The servo amplifier is malfunctioning.	Replace the servo amplifier, and then check the repeatability.	It is not repeatable.	Replace the servo amplifier.	
					It is repeatable.	Check (5).	
		(5)	The master station is malfunctioning.	Check if the master station is malfunctioning.	It has a failure.	Replace the master station.	

Alarm No.: 8D		Name: CC-Link IE communication error						
Alarm content		MR-J3-T10 came off. An error occurred in CC-Link IE communication.						
Detail No.	Detail name	Cause		Check method	Check result	Action	Target	
8D.5	Master station setting error 2	(1)	A reserved station has been selected by the master station, and the cyclic communication has stopped.	Check if a reserved station is selected.	It is selected.	Cancel the reserved station.	[RJ010]	
8D.6	CC-Link IE communication error 3	Check it with the check method for [AL. 8D.1].						
8D.7	CC-Link IE communication error 4	(1)	The transmission status of the CC-Link IE communication is abnormal.	Check the noise, ambient temperature, etc.	It has a failure.	Take countermeasures against its cause.	[RJ010] [GF]	
					It has no failure.	Check (2).		
		(2)	MR-J3-T10 is malfunctioning.	Replace the MR-J3-T10, and then check the repeatability.	It is not repeatable.	Replace the MR-J3-T10.	[RJ010]	
					It is repeatable.	Check (3).		
		(3)	The servo amplifier is malfunctioning.	Replace the servo amplifier, and then check the repeatability.	It is not repeatable.	Replace the servo amplifier	[RJ010] [GF]	
					It is repeatable.	Check (4).		
		(4)	The master station is malfunctioning.	Check if the master station is malfunctioning.	It has a failure.	Replace the master station.		
8D.8	CC-Link IE communication error 5	Check it with the check method for [AL. 8D.7].						
8D.9	Synchronization error 1	Check it with the check method for [AL. 8D.1].						
8D.A	Synchronization error 2							

Alarm No.: 8E		Name: USB communication error/serial communication error/Modbus RTU communication error					
Alarm content		· A communication error occurred between the servo amplifier and a personal computer/controller. · An error occurred in USB communication, serial communication (Mitsubishi Electric general-purpose AC servo protocol), or Modbus RTU communication.					
Detail No.	Detail name	Cause		Check method	Check result	Action	Target
8E.1	USB communication receive error/ serial communication receive error	(1)	The setting of the personal computer, etc. is incorrect.	Check the setting of the personal computer, etc.	It is incorrect.	Review the settings.	[A] [B] [WB] [RJ010] [GF]
					It is correct.	Check (2).	
		(2)	A communication cable is malfunctioning.	Check the communication cable, and then check the repeatability.	It is not repeatable.	Replace the communication cable.	
					It is repeatable.	Check (3).	
		(3)	The servo amplifier is malfunctioning.	Replace the servo amplifier, and then check the repeatability.	It is not repeatable.	Replace the servo amplifier.	
8E.2	USB communication checksum error/ serial communication checksum error	(1)	The setting of the personal computer, etc. is incorrect.	Check the setting of the personal computer, etc.	It is incorrect.	Review the settings.	
8E.3	USB communication character error/ serial communication character error	(1)	The transmitted character is out of specifications.	Check the character code at the time of transmission.	The transmitted character is out of specifications.	Correct the transmission data.	[A] [B] [WB] [RJ010]
					The transmitted character is within specifications.	Check (2).	
		(2)	The communication protocol is failure.	Check if transmission data supports the communication protocol.	It is not conforming.	Modify the transmission data according to the communication protocol.	
					It is conforming.	Check (3).	
		(3)	The setting of the personal computer, etc. is incorrect.	Check the setting of the personal computer, etc.	It is incorrect.	Review the settings.	
8E.4	USB communication command error/ serial communication command error	(1)	The transmitted command is out of specifications.	Check the command at the time of transmission.	The transmitted command is out of specifications.	Correct the transmission data.	
					The transmitted command is within specifications.	Check (2).	
		(2)	The communication protocol is failure.	Check if transmission data supports the communication protocol.	It is not conforming.	Modify the transmission data according to the communication protocol.	
					It is conforming.	Check (3).	
		(3)	The setting of the personal computer, etc. is incorrect.	Check the setting of the personal computer, etc.	It is incorrect.	Review the settings.	
8E.5	USB communication data number error/serial communication data number error	(1)	The transmitted data number is out of specifications.	Check the data number at the time of transmission.	The transmitted data number is out of specifications.	Correct the transmission data.	
					The transmitted data number is within specifications.	Check (2).	
		(2)	The communication protocol is failure.	Check if transmission data supports the communication protocol.	It is not conforming.	Modify the transmission data according to the communication protocol.	
					It is conforming.	Check (3).	
		(3)	The setting of the personal computer, etc. is incorrect.	Check the setting of the personal computer, etc.	It is incorrect.	Review the settings.	

Alarm No.: 8E		Name: USB communication error/serial communication error/Modbus RTU communication error					
Alarm content		A communication error occurred between the servo amplifier and a personal computer/controller. An error occurred in USB communication, serial communication (Mitsubishi Electric general-purpose AC servo protocol), or Modbus RTU communication.					
Detail No.	Detail name	Cause		Check method	Check result	Action	Target
8E.6	Modbus RTU communication receive error	(1)	The setting of the controller, servo amplifier, etc. is incorrect.	Check the setting of the controller, servo amplifier, etc. (such as communication protocol selection, baud rate, parity).	It is incorrect.	Review the settings.	[A]
					It is correct.	Check (2).	
		(2)	A communication cable is malfunctioning.	Check the communication cable and then check the repeatability.	It is not repeatable.	Replace the communication cable.	
					It is repeatable.	Check (3).	
		(3)	The servo amplifier is malfunctioning.	Replace the servo amplifier, and then check the repeatability.	It is not repeatable.	Replace the servo amplifier.	
8E.7	Modbus RTU communication message frame error	(1)	The communication protocol is failure.	Check if transmission data conforms the communication protocol.	It is not conforming.	Modify the transmission data according to the communication protocol.	
					It is conforming.	Check (2).	
		(2)	The setting of the controller, servo amplifier, etc. is incorrect.	Check the setting of the controller, servo amplifier, etc. (such as communication protocol selection, baud rate, parity).	It is incorrect.	Review the settings.	
8E.8	Modbus RTU communication CRC error	Check it with the check method for [AL. 8E.7].					

Alarm No.: 88888		Name: Watchdog					
Alarm content		[RJ010]: MR-J3-T10 came off. A part such as CPU is malfunctioning.					
Detail No.	Detail name	Cause		Check method	Check result	Action	Target
88_/ 8888_	Watchdog	(1)	The MR-J3-T10 came off during the CC-Link IE communication.	Check if [AL. 74 Option card error 1] occurred with alarm history.	It is occurring.	Check it with the check method for [AL. 74].	[RJ010]
					It did not occur.	Check (2).	
		(2)	A part in the servo amplifier is failure.	Replace the servo amplifier, and then check the repeatability.	It is not repeatable.	Replace the servo amplifier.	[A] [B] [WB] [RJ010] [GF]

1.5 Remedies for warnings

⚠CAUTION

If [AL. E3 Absolute position counter warning] occurs, remove the cause of the warning, and always make home position setting again. Otherwise, it may cause an unexpected operation.

Point

When any of the following alarms has occurred, do not cycle the power of the servo amplifier repeatedly to restart. Doing so will cause a malfunction of the servo amplifier and servo motor. If the power of the servo amplifier is switched off/on during the alarms, allow more than 30 minutes for cooling before resuming operation.

- [AL. 91 Servo amplifier overheat warning]
- [AL. E0 Excessive regeneration warning]
- [AL. E1 Overload warning 1]
- [AL. E2 Servo motor overheat warning]
- [AL. EC Overload warning 2]

Warnings (except [AL. F0 Tough drive warning]) are not recorded in the alarm history.

If [AL. E6], [AL. E7], [AL. E9], [AL. EA], or [AL. EB] occurs, the amplifier will be the servo-off status. If any other warning occurs, operation can be continued but an alarm may take place or proper operation may not be performed.
Remove the cause of warning according to this section. Use MR Configurator2 to refer to the cause of warning occurrence.

Alarm No.: 90		Name: Home position return incomplete warning					
Alarm content		A home position return did not complete normally with the positioning function.					
Detail No.	Detail name	Cause		Check method	Check result	Action	Target
90.1	Home position return incomplete	(1)	An automatic operation was executed at home position return incompletion.	Check if the home position return was not executed (the following devices are not off.). [A]: ZP (Home position return completion) [GF]: ZP2 (Home position return completion 2)	A home position return was not executed.	Execute a home position return.	[A] [GF]
					A home position return was executed.	Check (2).	
		(2)	A positioning operation was executed without home position setting with absolute position after [AL. 25 Absolute position erased] occurred.	Check if [AL. 25 Absolute position erased] occurred using alarm history.	[AL. 25 Absolute position erased] occurred.	Check the battery voltage and battery cable if they have a failure and execute a home position return after remove the failure.	
					[AL. 25 Absolute position erased] did not occur.	Check (3).	
		(3)	With the indexer method, [AL. E3 Absolute position counter warning] occurred simultaneously with the alarm.	Check if [AL. 90.1] occurred simultaneously with start of the positioning operation.	[AL. 90.1] did not occur simultaneously with start of the positioning operation but occurred during positioning operation.	Remove the cause of [AL. E3], and perform home position return. (Check it with the check method for [AL. E3].)	
					[AL. 90.1] occurred simultaneously with start of the positioning operation.	Check (4).	
		(4)	ZP (Home position return completion) turned off after the home position return was executed.	Check if ZP (Home position return completion) is off.	ZP (Home position return completion) is off.	Check the conditions if ZP (Home position return completion) can be off. (Refer to section 2.3 of "MR-J4-_A_-RJ Servo Amplifier Instruction Manual (Positioning Mode)")	[A]
		(5)	A software stroke limit/ stroke limit was detected.	In the I/O mode, check if [AL. 99 Stroke limit warning] occurred when "_ _ _ 1" is set to [Pr. PD12], or [AL. 98 Software stroke limit warning] occurred when "_ 1 _ _" is set to [Pr. PD12].	[AL. 98 Software stroke limit warning] or [AL. 99 Stroke limit warning] occurred in the I/O mode.	Move the machine to within the limit range, and then make a home position return. When the home position is fixed, enable servo-on again.	[GF]
					[AL. 98 Software stroke limit warning] or [AL 99 Stroke limit warning] did not occur. Or the motion mode is set.	Check (6).	
		(6)	ZP2 (Home position return completion 2) turned off after the home position return was executed.	Check if ZP2 (Home position return completion 2) is off.	ZP2 (Home position return completion 2) is off.	Check the conditions in which ZP2 (Home position return completion 2) is off. (_ MR-J4-_GF_(-RJ) Servo Amplifier Instruction Manual (I/O Mode)	

Alarm No.: 90		Name: Home position return incomplete warning					
Alarm content		A home position return did not complete normally with the positioning function.					
Detail No.	Detail name	Cause		Check method	Check result	Action	Target
90.2	Home position return abnormal termination	(1)	The proximity dog is not connected to DOG.	Check if the proximity dog is connected correctly.	It is not connected.	Connect it correctly.	[A] [GF]
					It is connected.	Check (2).	
		(2)	The stroke limit was detected after the home position return start.	Check if the stroke limit is connected correctly. Or check if the stroke limit is not reached.	The stroke limit is not connected. Or the stroke limit is reached.	Connect the stroke limit correctly. Review the stroke limit position.	
					The stroke limit is connected. Or the stroke limit is not reached.	Check (3).	
		(3)	A home position return speed did not decelerate to a creep speed.	Check if the proximity dog turned off before a home position return completed deceleration to a creep speed.	The proximity dog turned off before the deceleration to a creep speed.	Review the dog position. Or review the parameter values of the home position return speed, creep speed, and travel distance after proximity dog.	
		(4)	Deceleration from the home position return speed/creep speed to the home position failed at the indexer method.	Check if the home position was turned on before the deceleration from the home position return speed/creep speed to the home position was complete.	It was not turned on before the deceleration was complete.	Review the positional relationship of the stroke limit and home position. Or review the parameter values of the home position return speed, creep speed, deceleration time constant, and home position shift distance.	
90.5	Z-phase unpassed	(1)	The Z-phase signal was not detected normally.	Check if the Z-phase signal of the servo motor/ linear servo motor was detected normally.	The Z-phase signal was not detected.	Review the Z-phase signal and wirings.	
					The Z-phase signal was detected.	Check (2).	
		(2)	A home position return was executed while the servo motor did not pass the Z-phase.	Check if the motor passed the Z-phase signal until the proximity dog turned off after the home position return started.	The Z-phase was not turned on.	Review the setting position of the home position return start and proximity dog.	

Alarm No.: 91		Name: Servo amplifier overheat warning					
Alarm content		The temperature inside of the servo amplifier reached a warning level.					
Detail No.	Detail name	Cause		Check method	Check result	Action	Target
91.1	Main circuit device overheat warning	(1)	Ambient temperature of the servo amplifier has exceeded 55 °C.	Check the ambient temperature.	It is over 55 °C.	Lower the ambient temperature.	[A] [B] [WB] [RJ010] [GF]
					It is less than 55 °C.	Check (2).	
		(2)	The close mounting is out of specifications.	Check the specifications of close mounting.	It is out of specifications.	Use within the range of specifications.	

Alarm No.: 92		Name: Battery cable disconnection warning					
Alarm content		Battery voltage for absolute position detection system decreased.					
Detail No.	Detail name	Cause		Check method	Check result	Action	Target
92.1	Encoder battery cable disconnection warning	(1)	1) When an MR-BAT6V1SET(-A) battery or MR-BT6VCASE battery case was used, the battery was not connected to CN4. 2) When an MR-BAT6V1BJ battery for junction battery cable was used, the battery was not connected to both CN4 and MR-BT6VCBL03M junction battery cable.	Check if the battery is connected correctly.	It is not connected.	Connect it correctly.	[A] [B] [WB] [RJ010] [GF]
					It is connected.	Check (2).	
		(2)	A battery cable was disconnected.	Check if the battery cable is malfunctioning.	It has a failure.	Replace or repair the cable.	
					It has no failure.	Check (3).	
		(3)	The battery voltage is low. The battery is consumed.	Check the battery voltage with a tester. When an MR-BAT6V1BJ battery for junction battery cable was used, check the voltage of the connector (orange) for servo amplifier.	It is less than 3.1 V DC.	Replace the battery.	
					It is 3.1 V DC or more.	Check (4).	
		(4)	An encoder cable was disconnected.	Check if the encoder cable is disconnected.	It is disconnected.	Replace or repair the cable.	
92.3	Battery degradation	(1)	The battery voltage is low. The battery is consumed.	Check the battery voltage with a tester.	It is less than 3.0 V DC.	Replace the battery.	
					It is 3.0 V DC or more.	Check (2).	
		(2)	The battery has deteriorated.	Replace the battery, and then check the repeatability.	It is not repeatable.	Replace the battery.	

Alarm No.: 93		Name: ABS data transfer warning					
Alarm content		ABS data were not transferred.					
Detail No.	Detail name	Cause		Check method	Check result	Action	Target
93.1	ABS data transfer requirement warning during magnetic pole detection	(1)	The Z-phase was not turned on at servo-on.	Check if the position within one-revolution is "0".	It is "0". (The Z-phase was not turned on.)	Turn on the Z-phase and disable the magnetic pole detection. Always make home position setting again.	[A]
					It is other than "0". (The Z-phase was turned on.)	Check (2).	
		(2)	The magnetic pole detection was executed.	Check if the ABS data is transferred during the magnetic pole detection.	The ABS data is transferred.	Disable the magnetic pole detection. After that, cycle SON (Servo-on) and transfer the ABS data.	

Alarm No.: 95		Name: STO warning					
Alarm content		· STO input signal turns off while the servo motor stops. · A diagnosis of input devices was not executed. · The safety observation function was enabled in the test mode.					
Detail No.	Detail name	Cause		Check method	Check result	Action	Target
95.1	STO1 off detection	(1)	STO1 is not inputted correctly.	Check if the STO1 of CN8 connector is wired correctly.	It is not wired correctly.	Wire it correctly. (When not using the STO function, attach the short-circuit connector came with the servo amplifier to CN8.)	[A] [B] [WB] [RJ010] [GF]
					It is wired correctly.	Check (2).	
		(2)	STO1 was turned off (enabled) under the following speed conditions. 1) Servo motor speed: 50 r/min or less 2) Linear servo motor speed: 50 mm/s or less 3) Direct drive motor speed: 5 r/min or less	Check if STO1 is off (enabled).	It is off (enabled).	Turn on STO1 (disabled).	
95.2	STO2 off detection	(1)	STO2 is not inputted correctly.	Check if the STO2 of CN8 connector is wired correctly.	It is not wired correctly.	Wire it correctly. (When not using the STO function, attach the short-circuit connector came with the servo amplifier to CN8.)	
					It is wired correctly.	Check (2).	
		(2)	STO2 was turned off (enabled) under the following speed conditions. 1) Servo motor speed: 50 r/min or less 2) Linear servo motor speed: 50 mm/s or less 3) Direct drive motor speed: 5 r/min or less	Check if STO2 is off (enabled)	It is off (enabled).	Turn on STO2.	
95.3	STO warning 1 (safety observation function)	(1)	"Input device - Fixing-diagnosis execution selection at start-up" was not executed	Check if "Input device - Fixing-diagnosis execution selection at start-up" was executed.	It was not executed.	Execute it.	[A] [B] [GF]
					It was executed.	Check (2).	
		(2)	Set "Input device - Fixing-diagnosis execution selection at start-up" correctly using parameters.	Check if [Pr. PSD27] and [Pr. PSD28] are set correctly.	It is not set correctly.	Review the parameter.	
					It is set correctly.	Check (3).	
		(3)	The wiring is incorrect.	Check if the wiring has a failure.	It has a failure.	Review the wiring.	
					It has no failure.	Check (4).	
		(4)	The functional safety unit is malfunctioning.	Replace the functional safety unit, and then check the repeatability.	It is not repeatable.	Replace the functional safety unit.	
					It is repeatable.	Check (5).	
		(5)	Something near the device caused it.	Check the noise, ambient temperature, etc.	There is a problem in the surrounding.	Take countermeasures against its cause.	

Alarm No.: 95		Name: STO warning					
Alarm content		STO input signal turns off while the servo motor stops. A diagnosis of input devices was not executed. The safety observation function was enabled in the test mode.					
Detail No.	Detail name	Cause		Check method	Check result	Action	Target
95.4	STO warning 2 (safety observation function)	(1)	The test operation mode was not set correctly.	Check if the servo amplifier and functional safety unit are set to the test operation mode.	It is not set.	Set it correctly.	[A] [B] [WB] [RJ010] [GF]
					It is set.	Check (2).	
		(2)	An error occurred in the safety communication. Or the network is disconnected.	Check the description "The display shows "Ab"." Page 126 Trouble which does not trigger alarm/warning	It is not repeatable.	Take countermeasures against its cause.	
					It is repeatable.	Check (3).	
		(3)	"Input mode selection" in [Pr. PSA02 Functional safety unit setting] is not set correctly.	Set [Pr. PSA02] correctly and check the repeatability.	It is not repeatable.	Review the parameter.	
					It is repeatable.	Check (4).	
		(4)	A functional safety unit which is not compatible with the safety communication is connected.	Check the software version of the functional safety unit.	It is A1 or earlier.	Replace the functional safety unit with a one with software version A2 or later.	[GF]
					It is A2 or later.	Check (5).	
		(5)	The setting of [Pr PSC04 Safety communication - Network communication selection] is incorrect.	Correct the setting of [Pr PSC04] and check the repeatability.	It is not repeatable.	Review the parameter setting.	[B] [GF]
					It is repeatable.	Check (6).	
		(6)	The servo amplifier is malfunctioning.	Replace the servo amplifier, and then check the repeatability.	It is not repeatable.	Replace the servo amplifier.	[A] [B] [WB] [RJ010] [GF]
					It is repeatable.	Check (7).	
		(7)	The functional safety unit is malfunctioning.	Replace the functional safety unit, and then check the repeatability.	It is not repeatable.	Replace the functional safety unit.	
					It is repeatable.	Check (8).	
		(8)	Something near the device caused it.	Check the noise, ambient temperature, etc.	There is a problem in the surrounding.	Take countermeasures against its cause.	
95.5	STO warning 3 (safety observation function)	(1)	STO command/SS1 command of the functional safety unit was turned off (enabled) under the following speed conditions. 1) Servo motor speed: 50 r/min or less 2) Linear servo motor speed: 50 mm/s or less 3) Direct drive motor speed: 5 r/min or less	Check if STO command/ SS1 command of the functional safety unit is off (enabled).	It is off (enabled).	Turn on (disabled) STO command/SS1 command of the functional safety unit.	

Alarm No.: 96	Name: Home position setting warning						
Alarm content	· Home position setting could not be made.						
Detail No.	Detail name	Cause		Check method	Check result	Action	Target
96.1	In-position warning at home positioning	(1)	INP (In-position) did not turn on within the specified time during home positioning.	Check the droop pulses during home positioning.	It is in-position range or more.	Adjust gains to set droop pulses within the in-position range. Remove the cause of droop pulse occurrence, and make home position setting.	[A] [B] [WB] [RJ010] [GF]
96.2	Command input warning at home positioning	(1)	A command has already inputted at the time of home positioning.	Check if a command is inputted at home positioning.	A command is inputted.	Set it after home positioning.	
					A command is not inputted.	Check (2).	
		(2)	Creep speed is high.	Decrease the creep speed, and then check the repeatability.	It is not repeatable.	Decelerate the creep speed, and make home position setting.	
96.3	Servo off warning at home positioning	(1)	A home positioning was executed during servo-off.	Check if the status is servo-off at home positioning.	It is servo-off.	Turn to servo-on, and then execute the home positioning.	[A]
96.4	Home positioning warning during magnetic pole detection	(1)	Z-phase was not turned on after servo-on.	Check if the Z-phase was turned on.	The Z-phase was not turned on.	Rotate the direct drive motor to turn on the Z-phase, and make home position setting.	[A] [GF]

Alarm No.: 97	Name: Positioning specification warning						
Alarm content	· How to specify a positioning is incorrect for the positioning function.						
Detail No.	Detail name	Cause		Check method	Check result	Action	Target
97.1	Program operation disabled warning	(1)	When using the positioning function, start a program with the program operation disabled.	Check if the power of the servo amplifier was cycled after the program was changed.	The power of the servo amplifier was not cycled.	Cycle the power of the servo amplifier.	[A]
97.2	Next station position warning	(1)	An abnormal value was specified to a signal input of the next station position specification and automatic operation was started.	Check if a number of stations per rotation ([Pr. PT28]) or more value was not specified to the next station position.	The number of stations per rotation ([Pr. PT28]) or more value was specified.	Review the parameter setting or next station position input signal.	
					The number of stations per rotation ([Pr. PT28]) or more value was not specified.	Check (2).	
		(2)	The power of the servo amplifier was not cycled after the number of stations per rotation ([Pr. PT28]) was changed.	Check if the power of the servo amplifier was cycled after the number of stations per rotation ([Pr. PT28]) was changed.	The power was not cycled.	Cycle the power of the servo amplifier.	

Alarm No.: 98		Name: Software limit warning					
Alarm content		A software limit set with the parameter was reached for the positioning function.					
Detail No.	Detail name	Cause		Check method	Check result	Action	Target
98.1	Forward rotation-side software stroke limit reached	(1)	A software limit was set within the actual operation range.	Check if the parameter settings ([Pr. PT15] to [Pr. PT18]) to the operation range are correct.	The setting was out of operation range.	Set [Pr. PT15] to [Pr. PT18] correctly.	[A] [GF]
					The setting was within operation range.	Check (2).	
		(2)	A point table of the position data which exceeds the software limit was executed.	Check if the target position of the point data to the operation range was correct.	The setting was out of operation range.	Set the point table correctly.	
					The setting was within operation range.	Check (3).	
		(3)	A software limit was reached by using the JOG operation or manual pulse generator operation.	Check if the JOG operation or manual pulse generator operation was executed properly to the operation range.	It reached to the out of operation range.	Operate within the software limit. Adjust properly the parameters such as JOG speed and multiplication of the manual pulse as necessary.	
98.2	Reverse rotation-side software stroke limit reached	Check it with the check method for [AL. 98.1].					

Alarm No.: 99		Name: Stroke limit warning					
Alarm content		The stroke limit signal is off.					
Detail No.	Detail name	Cause		Check method	Check result	Action	Target
99.1	Forward rotation stroke end off	(1)	The forward rotation stroke limit switch is connected to LSP.	Check if the limit switch is connected correctly.	It is not connected.	Connect it correctly.	[A] [GF]
					It is connected.	Check (2).	
		(2)	The forward rotation stroke end was exceeded during driving.	Check if the forward rotation stroke limit switch turned off.	It turned off.	Check operation pattern.	
99.2	Reverse rotation stroke end off	(1)	The reverse rotation stroke limit switch is connected to LSN.	Check if the limit switch is connected correctly.	It is not connected.	Connect it correctly.	
					It is connected.	Check (2).	
		(2)	The reverse rotation stroke end was exceeded during driving.	Check if the reverse rotation stroke limit switch turned off.	It turned off.	Check operation pattern.	
99.4	Upper stroke limit off	(1)	The upper stroke limit switch is not connected to FLS of the controller.	Check if the limit switch is connected correctly.	It is not connected.	Connect it correctly.	[GF]
					It is connected.	Check (2).	
		(2)	The upper stroke limit was exceeded during driving.	Check if the upper stroke limit switch turned off.	It turned off.	Check operation pattern.	
99.5	Lower stroke limit off	(1)	The lower stroke limit switch is not connected to RLS of the controller.	Check if the limit switch is connected correctly.	It is not connected.	Connect it correctly.	
					It is connected.	Check (2).	
		(2)	The lower stroke limit was exceeded during driving.	Check if the lower stroke limit switch turned off.	It turned off.	Check operation pattern.	

Alarm No.: 9A	Name: Optional unit input data error warning						
Alarm content	The BCD input data setting is incorrect when MR-D01 extension IO unit is connected.						
Detail No.	Detail name	Cause		Check method	Check result	Action	Target
9A.1	Optional unit input data sign error	(1)	The MR-D01 extension IO unit is not connected.	Check if MR-D01 is connected correctly.	It is not connected.	Connect it correctly.	[A]
					It is connected.	Check (2).	
		(2)	Both of + and - signs are on or off.	Check the sign of the optional unit input data.	Both are on or both are off.	Turn on one of the signs only.	
					Only one of the signs is on.	Check (3).	
		(3)	The - sign is set at incremental value command.	Check the sign of the optional unit input data.	The - sign is set.	Set it to +.	
					The + sign is set.	Check (4).	
		(4)	The MR-D01 extension IO unit is malfunctioning.	Replace the MR-D01, and then check the repeatability.	It is not repeatable.	Replace the MR-D01.	
9A.2	Optional unit BCD input data error	(1)	Other than "0" to "9" is set in a digit.	Check the BCD input data.	A value out of range is set.	Set a value from "0" to "9".	

Alarm No.: 9B	Name: Error excessive warning						
Alarm content	Droop pulses have exceeded the warning occurrence level.						
Detail No.	Detail name	Cause		Check method	Check result	Action	Target
9B.1	Excess droop pulse 1 warning	(1)	The servo motor power cable was disconnected.	Check the servo motor power cable.	It is disconnected.	Repair or replace the servo motor power cable.	[A] [B] [WB] [GF]
					It is not disconnected.	Check (2).	
		(2)	The connection of the servo motor is incorrect.	Check the wiring of U/V/W.	It is incorrect.	Connect it correctly.	
					It is correct.	Check (3).	
		(3)	The connection of the encoder cable is incorrect.	Check if the encoder cable is connected correctly.	It is incorrect.	Connect it correctly.	
					It is correct.	Check (4).	
		(4)	The torque limit has been enabled.	Check if the limiting torque is in progress.	The limiting torque is in progress.	Increase the torque limit value.	
					The limiting torque is not in progress.	Check (5).	
		(5)	A moving part collided against the machine.	Check if it collided.	It collided.	Check operation pattern.	
					It did not collide.	Check (6).	
		(6)	The torque is insufficient.	Check the peak load ratio.	The torque is saturated.	Reduce the load or review the operation pattern. Or use a larger capacity motor.	
					The torque is not saturated.	Check (7).	
		(7)	Power supply voltage dropped.	Check the bus voltage value.	The bus voltage is low.	Check the power supply voltage and power supply capacity.	
					The bus voltage is high.	Check (8).	
		(8)	Acceleration/deceleration time constant is too short.	Set a longer deceleration time constant, and then check the repeatability.	It is not repeatable.	Increase the acceleration/deceleration time constant.	
					It is repeatable.	Check (9).	

Alarm No.: 9B		Name: Error excessive warning					
Alarm content		Droop pulses have exceeded the warning occurrence level.					
Detail No.	Detail name	Cause		Check method	Check result	Action	Target
9B.1	Excess droop pulse 1 warning	(9)	The position loop gain is small.	Increase the position loop gain, and then check the repeatability.	It is not repeatable.	Increase the position loop gain ([Pr. PB08]).	[A] [B] [WB] [GF]
					It is repeatable.	Check (10).	
		(10)	Servo motor shaft was rotated by external force./The moving part of the linear servo motor was moved by external force.	Measure the actual position under the servo-lock status.	It is rotated by external force./It was moved by external force.	Review the machine.	
					It is not rotated by external force./It was not moved by external force.	Check (11).	
		(11)	An encoder is malfunctioning.	Replace the servo motor, and then check the repeatability.	It is not repeatable.	Replace the servo motor.	
9B.3	Excess droop pulse 2 warning	Check it with the check method for [AL. 9B.1].					
9B.4	Error excessive warning during 0 torque limit	(1)	The torque limit has been 0.	Check the torque limit value.	The torque limit has been 0.	Do not input a command while the torque limit value is 0.	[A] [B] [WB] [GF]

Alarm No.: 9C		Name: Converter warning					
Alarm content		A warning occurred in the converter unit during the servo-on.					
Detail No.	Detail name	Cause		Check method	Check result	Action	Target
9C.1	Converter unit warning	(1)	A warning occurred in the converter unit during the servo-on.	Check the warning of the converter unit, and take the action following the remedies for warnings of the converter unit.			[A] [B]

Alarm No.: 9D		Name: CC-Link IE warning 1					
Alarm content		The station No. switch setting was changed after power-on. The station No. setting differs from that of master station.					
Detail No.	Detail name	Cause		Check method	Check result	Action	Target
9D.1	Station number switch change warning	(1)	The station No. switch setting was changed after power-on.	Check if the switch was changed.	It was changed.	Restore the setting. Do not change the station No. switch after power-on.	[RJ010]
					It was not changed.	Check (2).	
		(2)	The servo amplifier is malfunctioning.	Replace the servo amplifier, and then check the repeatability.	It is not repeatable.	Replace the servo amplifier.	

Alarm No.: 9D		Name: CC-Link IE warning 1					
Alarm content		· The station No. switch setting was changed after power-on. · The station No. setting differs from that of master station.					
Detail No.	Detail name	Cause		Check method	Check result	Action	Target
9D.2	Master station setting warning	(1)	When MR-D30 is used to perform safety communication, the servo amplifier and MR-D30 are not connected correctly.	Check the connection of the servo amplifier to MR-D30.	It is not connected.	Connect it correctly.	[GF]
					Safety communication is not performed. Or the servo amplifier is connected to MR-D30 correctly.	Check (2).	
		(2)	The settings of the station type or cyclic points on the master station side do not match those on the servo amplifier side.	Check the setting of the master station and the servo amplifier.	The setting is incorrect.	Review the setting on the master station side.	[RJ010] [GF]
9D.3	Overlapping station number warning	(1)	The same station No. as other station was set.	Check devices on the network if station Nos. are overlapped.	They are overlapped.	Review the settings of the station Nos.	
9D.4	Mismatched station number warning	(1)	The station No. controlled on master side differs from that set on slave side.	Check the station No. on master side and slave side if they are matched together.	They are not matched.	Review the settings of the station Nos.	

Alarm No.: 9E		Name: CC-Link IE warning 2					
Alarm content		· The receive data of the CC-Link IE communication is abnormal.					
Detail No.	Detail name	Cause		Check method	Check result	Action	Target
9E.1	CC-Link IE warning	(1)	MR-J4-_GF_(-RJ) servo amplifier set for CC-Link IE Field Network is connected to the network of CC-Link IE Field Network Basic.	Check the combination of the slide switches of the servo amplifier.	The combination of the slide switches (SW1-1/SW1-2) are set for CC-Link IE Field Network. SW1-1: OFF (down) SW1-2: OFF (down)	Set the combination of the slide switches (SW1-1/SW1-2) for CC-Link IE Field Network Basic. SW1-1: OFF (down) SW1-2: ON (up)	[GF]
		(2)	The transmission status of the CC-Link IE communication is abnormal.	Check the noise, ambient temperature, etc.	It has a failure.	Take countermeasures against its cause.	[RJ010] [GF]
					It has no failure.	Check (3).	
		(3)	The Ethernet cable was disconnected.	Check the Ethernet cable connection.	It is disconnected.	Turn off the control circuit power supply of the servo amplifier, and then connect the Ethernet cable.	
					It is connected.	Check (4).	
		(4)	The wiring of the Ethernet cable was incorrect.	Check if the wiring of Ethernet cable is correct.	The wiring is incorrect.	Wire it correctly.	
					The wiring is correct.	Check (5).	
		(5)	An Ethernet cable was disconnected.	Check if the Ethernet cable is malfunctioning.	It has a failure.	Replace the Ethernet cable.	
					It has no failure.	Check (6).	
		(6)	Communication with the master station is abnormal.	Check the setting of [Pr. Po02] and [Pr. Po03].	The setting value is incorrect.	Review the communication settings.	[RJ010]
					The setting value is correct.	Check (7).	
		(7)	The master station is malfunctioning.	Check if the master station is malfunctioning.	It has a failure.	Replace the master station.	[RJ010] [GF]

Alarm No.: 9F		Name: Battery warning					
Alarm content		Battery voltage for absolute position detection system decreased.					
Detail No.	Detail name	Cause		Check method	Check result	Action	Target
9F.1	Low battery	(1)	The battery is not connected to CN4.	Check if the battery is connected correctly.	It is not connected.	Connect it correctly.	[A] [B] [WB] [RJ010] [GF]
					It is connected.	Check (2).	
		(2)	The battery voltage is low. The battery is consumed.	Check the battery voltage with a tester. When an MR-BAT6V1BJ battery for junction battery cable was used, check the voltage of the connector (orange) for servo amplifier.	It is less than 4.9 V DC.	Replace the battery.	
9F.2	Battery degradation warning	(1)	The absolute position storage unit has not connected.	Check if the absolute position storage unit is connected correctly.	It is not connected.	Connect it correctly.	[A] [B] [WB] [GF]

Alarm No.: E0		Name: Excessive regeneration warning					
Alarm content		There is a possibility that regenerative power may exceed permissible regenerative power of built-in regenerative resistor or regenerative option.					
Detail No.	Detail name	Cause		Check method	Check result	Action	Target
E0.1	Excessive regeneration warning	(1)	The regenerative power exceeded 85% of the permissible regenerative power of the built-in regenerative resistor or regenerative option.	Check the effective load ratio.	It is 85% or more.	Reduce the frequency of positioning. Increase the deceleration time constant. Reduce the load. Use a regenerative option if it is not being used.	[A] [B] [WB] [RJ010] [GF]

Alarm No.: E1	Name: Overload warning 1						
Alarm content	- [AL. 50 Overload 1] or [AL. 51 Overload 2] can occur.						
Detail No.	Detail name	Cause		Check method	Check result	Action	Target
E1.1	Thermal overload warning 1 during operation	(1)	The load was over 85% to the alarm level of [AL. 50.1 Thermal overload error 1 during operation].	Check it with the check method for [AL. 50.1].			[A] [B] [WB] [RJ010] [GF]
E1.2	Thermal overload warning 2 during operation	(1)	The load was over 85% to the alarm level of [AL. 50.2 Thermal overload error 2 during operation].	Check it with the check method for [AL. 50.2].			
E1.3	Thermal overload warning 3 during operation	(1)	The load was over 85% to the alarm level of [AL. 51.1 Thermal overload error 3 during operation].	Check it with the check method for [AL. 51.1].			
E1.4	Thermal overload warning 4 during operation	(1)	The load was over 85% to the alarm level of [AL. 50.3 Thermal overload error 4 during operation].	Check it with the check method for [AL. 50.3].			
E1.5	Thermal overload error 1 during a stop	(1)	The load was over 85% to the alarm level of [AL. 50.4 Thermal overload error 1 during a stop].	Check it with the check method for [AL. 50.4].			
E1.6	Thermal overload error 2 during a stop	(1)	The load was over 85% to the alarm level of [AL. 50.5 Thermal overload error 2 during a stop].	Check it with the check method for [AL. 50.5].			
E1.7	Thermal overload error 3 during a stop	(1)	The load was over 85% to the alarm level of [AL. 51.2 Thermal overload error 3 during operation].	Check it with the check method for [AL. 51.2].			
E1.8	Thermal overload error 4 during a stop	(1)	The load was over 85% to the alarm level of [AL. 50.6 Thermal overload error 4 during a stop].	Check it with the check method for [AL. 50.6].			

Alarm No.: E2	Name: Servo motor overheat warning						
Alarm content	- [AL. 46.2 Abnormal temperature of servo motor 2] can occur.						
Detail No.	Detail name	Cause		Check method	Check result	Action	Target
E2.1	Servo motor temperature warning	(1)	The temperature of the linear servo motor or direct drive motor reached 85% of the occurrence level of [AL. 46.2 Abnormal temperature of servo motor 2].	Check it with the check method for [AL. 46.2].			[A] [B] [WB] [GF]

Alarm No.: E3	Name: Absolute position counter warning						
Alarm content	The multi-revolution counter value of the absolute position encoder exceeded the maximum range. Absolute position encoder pulses are faulty. An update cycle is short for writing multi-revolution counter value of the absolute position encoder to EEP-ROM.						
Detail No.	Detail name	Cause		Check method	Check result	Action	Target
E3.1	Multi-revolution counter travel distance excess warning	(1)	The travel distance from the home position is 32768 rev or more in the absolute position system.	Check the value of the multi-revolution counter.	It is 32768 rev or more.	Review operation range. Execute the home position return again. After the power is surely cycled, perform home position return again.	[A] [GF]
E3.2	Absolute position counter warning	(1)	Something near the device caused it.	Check the noise, ambient temperature, etc.	There is a problem in the surrounding.	Take countermeasures against its cause. After the power is surely cycled, perform home position return again.	[A] [B] [WB] [RJ010] [GF]
					There is no problem in the surrounding.	Check (2).	
		(2)	An encoder is malfunctioning.	Replace the servo motor, and then check the repeatability.	It is not repeatable.	Replace the servo motor.	
E3.4	Absolute positioning counter EEP-ROM writing frequency warning	(1)	A home position was renewed (EEP-ROM write) twice or more in 10 minutes in the servo amplifier due to rotation to the same direction in short time in the point table method of the positioning mode, degree setting with the program method, or the indexer method.	Check if the operation was within the following conditions between the number of gear teeth on machine side ([Pr. PA06] CMX) and servo motor speed (N). • When CMX ≤ 2000, N < 3076.7 r/min • When CMX > 2000, N < 3276.7 - (CMX × 0.1) r/min • When (CMX/CDV) is reduced to its lowest terms, CMX ≤ 15900	The operation was out of conditions.	Set the command speed within the conditions. Set the number of gear teeth on machine side within the conditions. After the power is surely cycled, perform home position return again.	[A] [GF]
E3.5	Encoder absolute positioning counter warning	Check it with the check method for [AL. E3.2].					

Alarm No.: E4	Name: Parameter warning						
Alarm content	Out of the setting range was attempted to write during parameter writing.						
Detail No.	Detail name	Cause		Check method	Check result	Action	Target
E4.1	Parameter setting range error warning	(1)	A parameter was set to out of range with the servo system controller.	Check the parameter setting value set with the servo system controller.	It is out of setting range.	Set it within the range.	[B] [WB] [RJ010]

Alarm No.: E5		Name: ABS time-out warning					
Alarm content		A response from the programmable controller was over 5 s at the absolute position erased data transfer. ABSM (ABS transfer mode) turned off during the absolute position erased data transfer. SON (Servo-on), RES (Reset), or EM2/EM1 (Forced stop) turned off during the absolute position erased data transfer.					
Detail No.	Detail name	Cause		Check method	Check result	Action	Target
E5.1	Time-out during ABS data transfer	(1)	The wiring of I/O signals is incorrect.	Check if the I/O signal wire is disconnected or connected loosely.	It has a failure.	Repair or replace the I/O signal wire.	[A]
					It has no failure.	Check (2).	
		(2)	The sequence program is incorrect.	Check the sequence program.	The sequence program is incorrect.	Modify the sequence program.	
E5.2	ABSM off during ABS data transfer	Check it with the check method for [AL. E5.1].					
E5.3	SON off during ABS data transfer						

Alarm No.: E6		Name: Servo forced stop warning					
Alarm content		EM2/EM1 (Forced stop) turned off. SS1 command was inputted.					
Detail No.	Detail name	Cause		Check method	Check result	Action	Target
E6.1	Forced stop warning	(1)	EM2/EM1 (Forced stop) turned off.	Check the status of EM2/EM1.	It is off.	Ensure safety and turn on EM2/EM1 (Forced stop).	[A] [B] [WB] [RJ010] [GF]
					It is on.	Check (2).	
		(2)	The external 24 V DC power supply is off.	Check if the external 24 V DC power supply is inputted.	It is not inputted.	Input the 24 V DC power supply.	
					It is inputted.	Check (3).	
		(3)	The servo amplifier is malfunctioning.	Replace the servo amplifier, and then check the repeatability.	It is not repeatable.	Replace the servo amplifier.	
E6.2	SS1 forced stop warning 1 (safety observation function)	(1)	The SS1 command is off (enabled).	Check if the SS1 command is off (enabled).	The SS1 command is off (enabled).	Turn on the SS1 input (disabled).	[A] [B] [GF]
		(2)	An external 24 V DC is not inputted to the functional safety unit.	Check if an external 24 V DC is inputted to the functional safety unit.	It is not inputted.	Input the 24 V DC power supply.	
					It is inputted.	Check (3).	
		(3)	The functional safety unit is malfunctioning.	Replace the functional safety unit, and then check the repeatability.	It is not repeatable.	Replace the functional safety unit.	
E6.3	SS1 forced stop warning 2 (safety observation function)	(1)	An error occurred in the safety communication.	Check the description "The display shows "Ab".". ☞ Page 126 Trouble which does not trigger alarm/warning	It is not repeatable.	Take countermeasures against its cause.	

Alarm No.: E7		Name: Controller forced stop warning					
Alarm content		The forced stop signal of the servo system controller was enabled.					
Detail No.	Detail name	Cause		Check method	Check result	Action	Target
E7.1	Controller forced stop input warning	(1)	The forced stop signal of the servo system controller was inputted.	Check if the servo system controller is a forced stop status.	It is the forced stop status.	Ensure safety and cancel the forced stop signal of the controller.	[B] [WB] [RJ010]
		(2)	The forced stop signal of the controller was inputted with Modbus RTU communication.	Check if the controller is in a forced stop status.	It is the forced stop status.	Ensure safety and cancel the forced stop signal of the controller.	[A]

Alarm No.: E8		Name: Cooling fan speed reduction warning					
Alarm content		The cooling fan speed decreased to the warning occurrence level or less.					
Detail No.	Detail name	Cause		Check method	Check result	Action	Target
E8.1	Decreased cooling fan speed warning	(1)	Foreign matter was caught in the cooling fan.	Check if a foreign matter is caught in the cooling fan.	Something has been caught.	Remove the foreign matter.	[A] [B] [WB] [RJ010] [GF]
					Nothing has been caught.	Check (2).	
		(2)	Cooling fan life expired.	Check the total of power on time of the servo amplifier.	It exceed the cooling fan life.	Replace the servo amplifier.	
E8.2	Cooling fan stop	Check it with the check method for [AL. E8.1].					

Alarm No.: E9		Name: Main circuit off warning					
Alarm content		The servo-on command was inputted with main circuit power supply off. The bus voltage dropped during the servo motor driving under 50 r/min.					
Detail No.	Detail name	Cause		Check method	Check result	Action	Target
E9.1	Servo-on signal on during main circuit off	(1)	The main circuit power supply is off. For the drive unit, the power supply of the converter unit is off.	Check if the main circuit power supply is inputted. Check if the power supply of the converter unit is inputted.	It is not inputted.	Turn on the main circuit power.	[A] [B] [WB] [RJ010] [GF]
					It is inputted.	Check (2).	
		(2)	The wiring between P3 and P4 was disconnected. For the drive unit, the wiring between P1 and P2 of the converter unit was disconnected.	Check the wiring between P3 and P4. Check the wiring between P1 and P2 of the converter unit.	It is disconnected.	Connect it correctly.	
					It is connected.	Check (3).	
		(3)	The main circuit power supply wiring was disconnected. For the drive unit, the main circuit power supply wiring of the converter unit was disconnected.	Check the main circuit power supply wiring. Check the main circuit power supply wiring of the converter unit.	It is disconnected.	Connect it correctly.	
					It has no failure.	Check (4).	
		(4)	For the drive unit, the magnetic contactor control connector of the converter unit was disconnected.	Check the magnetic contactor control connector of the converter unit.	It is disconnected.	Connect it correctly.	
					It has no failure.	Check (5).	
		(5)	For the drive unit, the bus bar between the converter unit and drive unit was disconnected.	Check the bus bar between the converter unit and drive unit.	It is disconnected.	Connect it correctly.	
					It has no failure.	Check (6).	

Alarm No.: E9	Name: Main circuit off warning						
Alarm content	The servo-on command was inputted with main circuit power supply off. The bus voltage dropped during the servo motor driving under 50 r/min.						
Detail No.	Detail name	Cause		Check method	Check result	Action	Target
E9.1	Servo-on signal on during main circuit off	(6)	The setting value of [Pr. PA02 Magnetic contactor drive output selection] contradicts the wiring constitution.	Check the [Pr. PA02] setting and the wiring constitution.	The setting or wiring is incorrect.	Review the setting of [Pr. PA02].	[A] [B] [WB] [RJ010] [GF]
					The setting and wiring are correct.	Check (7).	
		(7)	For the MR-J4-03A6(-RJ) or MR-J4W2-0303B6 servo amplifier, 24 V DC input is not selected even though 24 V DC input is used.	Check the parameter setting. MR-J4-03A6(-RJ): [Pr. PC27] MR-J4W2-0303B6: [Pr. PC05]	The setting is incorrect.	Set it correctly.	
					The setting is correct.	Check (8).	
		(8)	The bus voltage is low.	Check if the bus voltage is lower than the prescribed value. 200 V class: 215 V DC 400 V class: 430 V DC 100 V class: 215 V DC 48 V DC setting: 38 V DC 24 V DC setting: 18 V DC	The voltage is lower than the prescribed value.	Review the wiring. Check the power supply capacity.	
					The voltage is equal to or higher than the prescribed value.	Check (9).	
		(9)	The servo amplifier is malfunctioning.	Replace the servo amplifier, and then check the repeatability.	It is not repeatable.	(10) Replace the servo amplifier.	
		(10)	For the drive unit, the converter unit is malfunctioning.	Replace the converter unit, and then check the repeatability.	It is not repeatable.	Replace the converter unit.	
E9.2	Bus voltage drop during low speed operation	(1)	The bus voltage dropped during the servo motor driving under 50 r/min.	Check the bus voltage.	It is lower than the prescribed value. 200 V class: 200 V DC 400 V class: 430 V DC 100 V class: 200 V DC 48 V DC setting: 35 V DC 24 V DC setting: 15 V DC	Review the power supply capacity. Increase the acceleration time constant.	
E9.3	Ready-on signal on during main circuit off	Check it with the check method for [AL. E9.1].					
E9.4	Converter unit forced stop	(1)	The forced stop of the converter unit is enabled during the servo-on command.	Check if the forced stop of the converter unit is enabled.	It is enabled.	Deactivate the forced stop of the converter unit.	[A] [B]
					It is not enabled.	Check (2).	
		(2)	The protection coordination cable is not correctly connected.	Check the protection coordination cable.	It is not connected.	Connect the protection coordination cable correctly.	

Alarm No.: EA	Name: ABS servo-on warning						
Alarm content	The servo-on was not enabled within 1 s after ABSM (ABS transfer mode) was turned on.						
Detail No.	Detail name	Cause		Check method	Check result	Action	Target
EA.1	ABS servo-on warning	(1)	The wiring of I/O signals is incorrect.	Check if the I/O signal wire is disconnected or connected loosely.	It has a failure.	Repair or replace the I/O signal wire.	[A]
					It has no failure.	Check (2).	
		(2)	The sequence program is incorrect.	Check the sequence program.	The sequence program is incorrect.	Modify the sequence program.	

Alarm No.: EB	Name: The other axis error warning						
Alarm content	An alarm, which stops all axes, such as [AL. 24 Main circuit error] or [AL. 32 Overcurrent] occurred in other axis. "All alarms" of "Target alarm selection of the other axis error warning" is selected in [Pr. PF02].						
Detail No.	Detail name	Cause		Check method	Check result	Action	Target
EB.1	The other axis error warning	(1)	[AL. 24] occurred at other axis.	Check if [AL. 24] is occuring at other axis.	It is occurring.	Eliminate the cause of [AL. 24] on the other axis side.	[WB]
					It did not occur.	Check (2).	
		(2)	[AL. 32] occurred at other axis.	Check if [AL. 32] is occuring at other axis.	It is occurring.	Eliminate the cause of [AL. 32] on the other axis side.	
					It did not occur.	Check (3).	
		(3)	"All alarms" of "Target alarm selection of the other axis error warning" is selected in [Pr. PF02].	Check the [Pr. PF02] setting.	"All alarms" is selected.	Remove the cause of the occurring alarm at other axis.	

Alarm No.: EC	Name: Overload warning 2						
Alarm content	Operations over rated output were repeated while the servo motor shaft was not rotated.						
Detail No.	Detail name	Cause		Check method	Check result	Action	Target
EC.1	Overload warning 2	(1)	The load is too large or the capacity is not enough.	Check the effective load ratio.	The effective load ratio is high.	Reduce the load. Replace the servo motor with the one of larger capacity.	[A] [B] [WB] [RJ010] [GF]

Alarm No.: ED	Name: Output watt excess warning						
Alarm content	The status, in which the output wattage (speed × torque) of the servo motor exceeded the rated output, continued steadily.						
Detail No.	Detail name	Cause		Check method	Check result	Action	Target
ED.1	Output watt excess warning	(1)	The status, in which the output wattage (speed × torque or thrust) of the servo motor exceeded 120% of the rated output (continuous thrust), continued steadily.	Check the servo motor speed and torque, or check the motor speed and thrust.	The output wattage is 120% of rating.	Reduce the servo motor speed. Reduce the load.	[A] [B] [WB] [RJ010] [GF]

Alarm No.: F0	Name: Tough drive warning						
Alarm content	Tough drive function was activated.						
Detail No.	Detail name	Cause		Check method	Check result	Action	Target
F0.1	Instantaneous power failure tough drive warning	(1)	The voltage of the control circuit power supply has dropped.	Check it with the check method for [AL. 10.1].			[A] [B] [WB] [RJ010] [GF]
F0.3	Vibration tough drive warning	(1)	The setting value of the machine resonance suppression filter was changed due to a machine resonance.	Check if it was changed frequently.	It was changed frequently.	Set the machine resonance suppression filter. Check the machine status if screws are loose or the like.	

Alarm No.: F2	Name: Drive recorder - Miswriting warning						
Alarm content	A waveform measured by the drive recorder function was not recorded.						
Detail No.	Detail name	Cause		Check method	Check result	Action	Target
F2.1	Drive recorder - Area writing time-out warning	(1)	The Flash-ROM is malfunctioning.	Disconnect the cables except for the control circuit power supply, and then check the repeatability.	It is repeatable.	Replace the servo amplifier.	[A] [B] [WB] [RJ010] [GF]
F2.2	Drive recorder - Data miswriting warning	(1)	Data were not written to the drive recorder area.	Check if clearing alarm history disables this alarm with MR Configurator2.	It is not canceled.	Replace the servo amplifier.	

Alarm No.: F3	Name: Oscillation detection warning				
Alarm content	[AL. 54 Oscillation detection] can occur.				
Detail No.	Detail name	Cause	Check method	Check result	Action	Target
F3.1	Oscillation detection warning	Check it with the check method for [AL. 54.1].				

Alarm No.: F4	Name: Positioning warning						
Alarm content	Target position or acceleration time constant/deceleration time constant was set out of setting range.						
Detail No.	Detail name	Cause		Check method	Check result	Action	Target
F4.4	Target position setting range error warning	(1)	A target position was set out of setting range.	Check the setting value of the target position.	It is out of setting range.	Set the target position correctly, and cancel the warning (turn on C_ORST).	[Others]
F4.6	Acceleration time constant setting range error warning	(1)	The acceleration time constant or the deceleration time constant was set out of setting range.	Check the setting value of the acceleration time constant ([Pr. PT49]) and the deceleration time constant ([Pr. PT50]).	It is out of setting range.	Set the acceleration time constant and the deceleration time constant correctly, and cancel the warning (turn on ORST).	[GF]
F4.7	Deceleration time constant setting range error warning	(1)	Check it with the check method for [AL. F4.6].				
F4.9	Home position return type error warning	(1)	A home position return type was set out of setting range.	Check the setting value ([Pr. PT45]) of the home position return type.	It is not corresponding to a value for the home position return type.	Set the home position return type correctly, and cancel the warning (turn on ORST).	[GF]

Alarm No.: F5		Name: Simple cam function - Cam data miswriting warning					
Alarm content		The cam data written by MR Configurator2 is not written to a Flash-ROM.					
Detail No.	Detail name	Cause		Check method	Check result	Action	Target
F5.1	Cam data - Area writing time-out warning	(1)	The Flash-ROM is malfunctioning.	Disconnect the cables except for the control circuit power supply, and then check the repeatability.	It is repeatable.	Replace the servo amplifier.	[A] [GF]
F5.2	Cam data - Miswriting warning	(1)	The cam data was not written.	After the power is cycled, perform writing, and check the repeatability again. When the cam data is initialized, perform writing, and check the repeatability again. • Section 7.2.9 [Pr. PT34] of "MR-J4-_A_-RJ Servo Amplifier Instruction Manual (Positioning Mode)" □MR-J4-_GF_(-RJ) Servo Amplifier Instruction Manual (I/O Mode) • Section 7.2.4 [Pr. PT34] of "MR-J4-_GF_(-RJ) SERVO AMPLIFIER INSTRUCTION MANUAL (CC-Link IE Field Network Basic)"	It is repeatable.	Replace the servo amplifier.	
F5.3	Cam data checksum error	(1)	When the power is switched on after the cam data is written, a checksum of the cam data does not match. (Error occurred in cam data.)	Check if an error occurred (such as entered noise, power-off) at cam data write.	It has a failure.	After writing the cam data again, cycle the power.	
					It has no failure.	Check (2).	
		(2)	When the cam control command is turned on after the temporal writing of cam data, a checksum of the cam data does not match. (Error occurred in cam data.)	Check if an error occurred (such as entered noise) at temporal writing of cam data.	It has a failure.	After performing the temporal writing of cam data again, turn on the cam control command.	
					It has no failure.	Check (3).	
		(3)	The Flash-ROM is malfunctioning.	Replace the servo amplifier, and then check the repeatability.	It is not repeatable.	Replace the servo amplifier.	

Alarm No.: F6	Name: Simple cam function - Cam control warning						
Alarm content	The cam axis position restoration at a time of cam control start was a failure. The cam control is not normal.						
Detail No.	Detail name	Cause		Check method	Check result	Action	Target
F6.1	Cam axis one cycle current value restoration failed	(1)	The cam axis one cycle current value corresponding to the feed current value at cam control start cannot be restored. (It occurs in a reciprocating motion pattern of the cam.)	Check if the feed current value is within the stroke in a reciprocating motion pattern of the cam.	The feed current value is the outside of the stroke.	Move the feed current value to within the stroke in a reciprocating motion pattern of the cam. Or set the cam standard position within the stroke in a reciprocating motion pattern of the cam.	[A] [GF]
F6.2	Cam axis feed current value restoration failed	(1)	The difference (command unit) between the restored cam axis feed current value and the command position at cam control start is bigger than "in-position range".	Check if the difference (command unit) between the restored cam axis feed current value and the command position at cam control start is in the "in-position range".	The difference of the command position (command unit) is not within "in-position range".	Calculate the cam axis feed current value to be restored, move the command position to the position, and then start the cam control. (For the calculation method, refer to the following. • Section 12.1.7 (2) of "MR-J4-_A_-RJ Servo Amplifier Instruction Manual (Positioning Mode)" [ ]MR-J4-_GF_(-RJ) Servo Amplifier Instruction Manual (I/O Mode)) • Section 9.5.7 (2) of "MR-J4-_GF_(-RJ) SERVO AMPLIFIER INSTRUCTION MANUAL (CC-Link IE Field Network Basic)" Or set a larger setting value to "in-position range" when the setting value is extremely small, such as 0.	
F6.3	Cam unregistered error	(1)	Cam data has never been written.	Check if the cam data was written.	It was not written.	Write the cam data.	
					It was written.	Check (2).	
		(2)	The cam data of the specified cam No. was not written.	Check if the cam data of the specified cam No. was written.	It was not written.	Write the cam data of the specified cam No.	
					It was written.	Check (3).	
		(3)	Cam data has changed due to a servo amplifier malfunction.	Replace the servo amplifier, and then check the repeatability.	It is not repeatable.	Replace the servo amplifier.	
F6.4	Cam control data setting range error	(1)	An out of range value is set to the cam control data.	Check the setting of the cam control data.	The setting is incorrect.	Set it correctly.	
F6.5	Cam No. external error	(1)	An out of range value is set to the cam No.	Check the setting of the cam No.	The setting is incorrect.	Set it correctly.	

Alarm No.: F6		Name: Simple cam function - Cam control warning					
Alarm content		The cam axis position restoration at a time of cam control start was a failure. The cam control is not normal.					
Detail No.	Detail name	Cause		Check method	Check result	Action	Target
F6.6	Cam control inactive	(1)	After cam data was written, the cam control command was turned on without cycling the power.	Check if the power was cycled after the cam data was written.	The power was not cycled.	Cycle the power.	[A] [GF]
					The power was cycled.	Check (2).	
		(2)	After the cam control command was turned on, the servo-on was turned on.	Check if the cam control command was turned on during servo-on.	The cam control command was not turned on during servo-on.	Turn on the cam control command during servo-on.	
					The cam control command was turned on during servo-on.	Check (3).	
		(3)	The cam control command was turned on during servo motor driving, and the servo motor stopped.	Check if the cam control command was turned on while the travel completion was on.	The cam control command was not turned on while the travel completion was on.	Turn on the cam control command while the travel completion was on.	
					The cam control command was turned on while the travel completion was on.	Check (4).	
		(4)	The cam control command was turned on at the time of incompletion of home position return.	Check if the home position return completion is on.	The home position return completion is off.	Make a home position return, and turn on the cam control command.	
					The home position return completion is on.	Check (5).	
		(5)	It became servo-off during cam control.	Check if it is servo-off.	It is servo-off.	After servo-on, turn on the cam control command again.	
					It is servo-on.	Check (6).	
		(6)	A home position is erased during cam control.	Check if the home position return completion is off.	The home position return completion is off.	After the home position return completion, turn on the cam control command again.	
					The home position return completion is on.	Check (7).	
		(7)	It is stopped at a software limit during cam control.	Check if a software limit is reached.	A software limit is reached.	After it is retracted from the position of a software limit, turn on the cam control command again.	
					A software limit is not reached.	Check (8).	
		(8)	It is stopped at a stroke limit during cam control.	Check if a stroke limit is reached.	A stroke limit is reached.	After it is retracted from the position of a stroke limit, turn on the cam control command again.	

Alarm No.: F7		Name: Machine diagnosis warning					
Alarm content		There is a possibility that the equipment connected with the servo motor is malfunctioning.					
Detail No.	Detail name	Cause		Check method	Check result	Action	Target
F7.1	Vibration failure prediction warning	(1)	The servo system is unstable and oscillating.	Check if the gain is changed after the vibration failure prediction function is enabled.	The gain was changed.	Adjust the servo gain with the auto tuning. Set the machine resonance suppression filter.	[GF]
					The gain was not changed.	Check (2).	
		(2)	The vibration during servo motor operation increased because of deterioration of equipment parts.	Check that the vibration level during servo motor operation increased from that during the initial operation.	The vibration level during servo motor operation increased by 5% or lower from that during the initial operation.	Set a larger threshold multiplication for vibration failure prediction ([Pr. PF40] "_ _ x _") and restart the equipment.	
					The vibration level during servo motor operation increased by 5% or higher from that during the initial operation.	Check and maintain the equipment and replace parts as necessary.	
F7.2	Friction failure prediction warning	(1)	Changes in environment affected equipment friction.	Check that environment conditions such as ambient temperature has been changed from that of the initial operation.	The usage environment has been changed.	Reset the threshold to set a new one.	
					The usage environment is not changed.	Check (2).	
		(2)	Deterioration of equipment parts affected equipment friction.	Check that the friction torque at rated speed has been changed from that of the initial operation.	The friction torque at rated speed is not changed from that of the initial operation.	Set a larger threshold multiplication for friction failure prediction ([Pr. PF40] "_ _ _ x") and restart the equipment.	
					The friction torque at rated speed has been changed from that of the initial operation.	Check and maintain the equipment and replace parts as necessary.	
F7.3	Total travel distance failure prediction warning	(1)	The servo motor total travel distance exceeds the threshold.	Check if the threshold is set correctly.	The threshold is not set correctly.	Set the parameters so that the value of "[Pr. PF34] × [Pr. PF41]" is approximately the same as the rated life and restart the equipment.	
					The threshold is set correctly.	Check the equipment. After replacing the equipment, reset the servo motor total travel distance.	

1.6 Trouble which does not trigger alarm/warning

Point

When the servo amplifier, servo motor, or encoder malfunctions, the following status may occur.

The following example shows causes which do not trigger alarm or warning. Remove each cause referring to this section.

Description	Cause	Checkpoint	Action	Target
The display shows "AA".	The power of the servo system controller was turned off.	Check the power of the servo system controller.	Switch on the power of the servo system controller.	[B] [WB]
	A SSCNET Ⅲ cable was disconnected.	Check if "AA" is displayed in the corresponding axis and following axes.	Replace the SSCNET Ⅲ cable of the corresponding axis.	
		Check if the connectors (CN1A, CN1B) are unplugged.	Connect it correctly.	
	The control circuit power of the previous axis servo amplifier was turned off.	Check if "AA" is displayed in the corresponding axis and following axes.	Check the power of the servo amplifier.	
	The amplifier-less operation function of servo system controller is enabled.	Check if the amplifier-less operation function of servo system controller is enabled.	Disable the amplifier-less operation function.	
	An Ethernet cable was disconnected.	Check if "AA" is displayed in the corresponding axis and following axes.	Replace the Ethernet cable of the corresponding axis.	[RJ010] [GF]
		Check if the connectors (CN10A/CN10B or CN1A/CN1B) are unplugged.	Connect it correctly.	
The display shows "Ab".	A controller, which is not compatible with the servo amplifier, has been connected.	Check if a controller, which is not compatible with the servo amplifier, is connected.	Connect a compatible controller.	[B] [WB]
	The axis is disabled.	Check if the disabling control axis switch is on. [B]: SW2-2 [WB]: SW2-2 to 2-4	Turn off the disabling control axis switch.	
	The setting of the axis No. is incorrect.	Check that the other servo amplifier is not assigned to the same axis No.	Set it correctly.	
	Axis No. does not match with the axis No. set to the servo system controller.	Check the setting and axis No. of the servo system controller.	Set it correctly.	
	Information about the servo series has not set in the simple motion module.	Check the value set in Servo series (Pr.100) in the simple motion module.	Set it correctly.	
	Communication cycle does not match.	Check the communication cycle at the servo system controller side. When using 8 axes or less: 0.222 ms When using 16 axes or less: 0.444 ms When using 32 axes or less: 0.888 ms	Set it correctly.	

Description	Cause	Checkpoint	Action	Target
The display shows "Ab".	Connection to MR-J4W3-_B with software version A2 or earlier was attempted in 0.222 ms communication cycle.	Check if the communication cycle on servo system controller side is 0.222 ms.	Use them with 0.444 ms or more communication cycle.	[WB]
	MR-J4W3-_B was attempted to use in fully closed loop system.	Check if it was attempted to use in fully closed loop system.	MR-J4W3-_B does not support the fully closed loop control system. Use MR-J4-_B_ or MR-J4W2-_B.	
	A SSCNET Ⅲ cable was disconnected.	Check if "Ab" is displayed in the corresponding axis and following axes.	Replace the SSCNET Ⅲ cable of the corresponding axis.	[B] [WB]
		Check if the connectors (CN1A, CN1B) are unplugged.	Connect it correctly.	
	The control circuit power supply of the previous axis servo amplifier is off.	Check if "Ab" is displayed in the corresponding axis and following axes.	Check the power of the servo amplifier.	
	The amplifier-less operation function of servo system controller is enabled.	Check if the amplifier-less operation function of servo system controller is enabled.	Disable the amplifier-less operation function.	
	The servo amplifier is malfunctioning.	Check if "Ab" is displayed in the corresponding axis and following axes.	Replace the servo amplifier of the corresponding axis.	
	An Ethernet cable was disconnected.	Check if "Ab" is displayed in the corresponding axis and following axes.	Replace the Ethernet cable of the corresponding axis.	[RJ010] [GF]
	The servo amplifier power was switched on when the master station was off.	Check the power of the master station.	Turn on the power of the master station.	
	Communication cycle does not match.	Check the communication cycle on the master station side. When using 8 axes or less: 0.888 ms When using 16 axes or less: 1.777 ms	Set it correctly.	[RJ010]
		Check the communication cycle by referring to the controller instruction manual.	Refer to the controller instruction manual.	[GF]
	MR-J3-T10 is malfunctioning.	Replace the MR-J3-T10, and then check the repeatability.	Replace the MR-J3-T10.	[RJ010]
	The servo amplifier is malfunctioning.	Replace the servo amplifier, and then check the repeatability.	Replace the servo amplifier.	[RJ010] [GF]
	The master station is malfunctioning.	Replace the master station, and then check the repeatability.	Replace the master station.	
The display shows "b##".[1]	Test operation mode has been enabled.	Test operation setting switch is turned on.	Turn off the test operation setting switch.	[B] [WB] [RJ010] [GF]
	The system has been in the ready-off state.	Check if the servo ready state is off with the servo system controller.	Turn on the servo-on signals for all axes.	
The display shows "dEF".	Initializing point table/program is in progress.	Initializing of point table/ program was set in the parameter ([Pr. PT34] = 5001) and the power was cycled.	It takes about 20 s for startup the servo amplifier at initializing. Please wait until the display changes.	[A]
The display shows "off".	Operation mode for manufacturer setting is enabled.	Check if all of the control axis setting switches (SW2) are on.	Set the control axis setting switches (SW2) correctly.	[B] [WB] [RJ010] [GF]

Description	Cause	Checkpoint	Action	Target
The display turned off.	The external I/O terminal was shorted.	When the display is on by disconnecting the following connectors, check if the disconnected cable wire is shorted. [A]: CN1, CN2, CN3 [B] [WB] [RJ010] [GF]: CN2, CN3	Review the wiring of I/O signals.	[A] [B] [WB] [RJ010] [GF]
	The control circuit power supply is not applied.	Check if the control circuit power supply of the servo amplifier is off.	Turn on the control circuit power.	
	The voltage of the control circuit power supply has dropped.	Check if the voltage of the control circuit power supply dropped.	Increase the voltage of the control circuit power supply.	
The servo motor does not operate.	The connection of the servo motor is incorrect.	Check the wiring of U/V/W.	Connect it correctly.	[A] [B] [WB] [RJ010] [GF]
	The servo motor power supply cable was connected to a servo amplifier of other axis.	Check if the encoder cable and servo motor power supply cable are connected to the same servo amplifier.	Connect the encoder cable and servo motor power supply cable correctly.	
	An alarm or warning is occurring.	Check if an alarm or warning is occurring.	Check the content of the alarm/ warning and remove its cause.	
	The system has been in the test operation mode.	[A]: Check if the lower right point is blinking. [B] [WB] [RJ010] [GF]: Check if the test operation setting switch is on (up).	Cancel the test operation mode.	
	The motor-less operation has been enabled.	[A]: Check the [Pr. PC60] setting. [B] [WB] [RJ010] [GF]: Check the [Pr. PC05] setting.	Disable the motor-less operation.	
	The torque is insufficient due to large load.	Check instantaneous torque using status display (only [A]) or MR Configurator2 if the load exceeds the maximum torque or torque limit value.	Reduce the load or use a larger capacity servo motor.	
	An unintended torque limit has been enabled.	Check if the torque limit is enabled.	Cancel the torque limit.	
	The setting of the torque limit is incorrect.	Check if the torque limit is "0". [A]: [Pr. PA11] and [Pr. PA12], or analog input [B] [WB] [RJ010]: Setting on controller side [GF]: [Pr. PA11], [Pr. PA12], or setting on controller side	Set it correctly.	
	Machine is interfering with the motor.	Check if machine is interfering.	Remove the interference.	
	For a servo motor with an electromagnetic brake, the brake has not released.	Check the power supply of the electromagnetic brake.	Turn on the electromagnetic brake power.	
	LSP (Forward rotation stroke end) and LSN (Reverse rotation stroke end) are not on.	Check if [AL. 99] is occurring.	Turn on LSP and LSN.	[A] [GF]
	SON (Servo-on) is not on.	Check the SON (Servo-on) state.	Turn on SON (Servo-on).	
	RES (Reset) is on.	Check the RES (Reset) state.	Turn off RES (Reset).	[A]
	The setting of the control mode is incorrect.	Check the [Pr. PA01] setting.	Set it correctly.	

Description	Cause	Checkpoint	Action	Target
The servo motor does not operate.	The command pulse is not inputted in the position control mode.	Check if the pulse train is outputted on the controller side.	Review the setting on the controller side.	[A]
	The wiring of the command pulse train signal is incorrect in the position control mode.	Check the cumulative command pulses using the status display or MR Configurator2. Input the pulse train command and check if the display changes.	Review the wiring. When the signal is used in open-collector type, input 24 V DC to OPC.	
	The setting of the command pulse input form is incorrect in the position control mode.	Check that the pulse train form outputted with the controller and the setting of [Pr. PA13] are matched.	Review the [Pr. PA13] setting.	
	Both of ST1 (Forward rotation start) and ST2 (Reverse rotation start) are on or off in the speed control mode or the positioning mode.	Check the status of ST1 (Forward rotation start) and ST2 (Reverse rotation start).	Turn on ST1 (Forward rotation start) or ST2 (Reverse rotation start).	
	Both of RS1 (Forward rotation selection) and RS2 (Reverse rotation selection) are on or off in the torque control mode.	Check the status of RS1 (Forward rotation selection) and RS2 (Reverse rotation selection).	Turn on RS1 (Forward rotation selection) or RS2 (Reverse rotation selection).	
	The value selected in the speed control mode or the torque control mode is low.	Check SP1 (Speed selection 1), SP2 (Speed selection 2), and SP3 (Speed selection 3), and then check if the selected internal speed is correct.	Review the selections of SP1 (Speed selection 1), SP2 (Speed selection 2), SP3 (Speed selection 3), and setting of internal speed.	
	The value selected in the positioning mode (point table method) with BCD input is low.	Check SPD1 (Speed selection 1), SPD2 (Speed selection 2), SPD3 (Speed selection 3) and SPD4 (Speed selection 4), and then check if the selected internal speed is correct.	Review the wiring. Review the selections of SPD1 (Speed selection 1), SPD2 (Speed selection 2), SPD3 (Speed selection 3), SPD4 (Speed selection 4), and setting of internal speed.	
	An analog signal is not inputted correctly.	Check the values of analog speed command and analog torque command using status display or MR Configurator2.	Input the analog signals correctly.	
	The ABS transfer mode is selected when the absolute position detection system is used.	Check if ABSM is on.	Turn off ABSM.	
	The settings of the electronic gear are incorrect.	Check the setting value of the electronic gear.	Set a proper value of the electronic gear.	[A] [GF]
	The setting of point tables is incorrect.	Check the point table setting.	Review the point table setting.	

Description	Cause	Checkpoint	Action	Target
The servo motor does not operate.	The setting of the point table No. selection is incorrect.	Check the setting of the point table No. selection (CC-Link IE Field Network: RWwn06, CC-Link IE Field Network Basic: RWwn05)	Review the setting of the point table No. selection.	[GF]
	The setting of the next station No. selection is incorrect.	Check the setting of the next station No. selection (CC-Link IE Field Network: RWwn06, CC-Link IE Field Network Basic: RWwn05).	Review the setting of the next station No. selection.	
	RX (n + 3) F (cyclic communication ready) is off (00h).	Check if the controller does not set RY (n + 3) F (cyclic communication ready) to off (00h).	Set RY (n + 3) F (cyclic communication ready) to on (01h).	
	The control mode was not set with Modes of operation (6060h).	Check if the control mode was not set with Modes of operation (6060h).	Set the control mode with Modes of Operation (6060h).	
	The controller was stopped (STOP status). (CC-Link IE Field Network Basic-compatible controller and protocol version 1 or earlier)	Check if the controller is stopped (STOP status).	Run the controller (RUN status). For the protocol version compatible with the controller, contact the controller manufacturer.	
	An error occurred in the controller. (CC-Link IE Field Network Basic-compatible controller only)	Check if an error occurs in the controller.	Remove the error in accordance with the controller instruction manual.	
	Wiring or the command pulse multiplication setting is incorrect.	When using an MR-HDP01 manual pulse generator, check the wiring and the command pulse multiplication setting (assignment of TP0, TP1 and [Pr. PT03] setting).	Review the wiring and the command pulse multiplication setting.	[A]
	Power is not supplied to the MR-HDP01 manual pulse generator.	A power supply is not connected between +5 V to 12 V and 0 V of MR-HDP01.	Connect a power supply between +5 V to 12 V and 0 V of MR-HDP01.	
	Power is not supplied to OPC (power input for open-collector sink interface).	Between DICOM and OPC of the CN1 connector of the servo amplifier is not connected.	Connect between DICOM and OPC.	
	Power is not supplied to OPC (power input for open-collector sink interface).	Between DICOM and OPC of the CN1 connector of the servo amplifier is not connected.	Connect between DICOM and OPC.	
	The axis is disabled.	Check if the disabling control axis switch is on. [B]: SW2-2 [WB]: SW2-2 to 4	Turn off the disabling control axis switch.	[B] [WB]
	An error is occurring on the servo system controller side.	Check if an error is occurring on the servo system controller side.	Cancel the error of the servo system controller.	
	The setting of a parameter is incorrect on the servo system controller side.	Check the settings of parameters on the servo system controller side.	Review the setting of the parameter on the servo system controller side.	
	The position command is not inputted correctly.	Check cumulative command pulses using MR Configurator2 and check if numerical values are changed by inputting the command.	Review the setting of the servo system controller and the servo program.	
	The connection destination of the encoder cable is incorrect.	Check if the connection destinations of CN2A, CN2B, and CN2C are the same as CNP3A, CNP3B, and CNP3C.	Connect encoder cables correctly.	[WB]

Description	Cause	Checkpoint	Action	Target
The speed of the servo motor or linear servo motor is not increased. Or the speed is increased too much	The setting of the speed command, speed limit, or electronic gear is not correct.	Check the settings of the speed command, speed limit, and electronic gear.	Review the settings of the speed command, speed limit, and electronic gear.	[A] [B] [WB] [RJ010] [GF]
	The connection of the servo motor is incorrect.	Check the wiring of U/V/W.	Connect it correctly.	
	The voltage of the main circuit power supply has dropped.	Check if the voltage of the main circuit power supply dropped.	Increase the voltage of the main circuit power supply.	
	For a servo motor with an electromagnetic brake, the brake has not released.	Check the power supply of the electromagnetic brake.	Turn on the electromagnetic brake power.	
	The selection of SP1 (Speed selection 1), SP2 (Speed selection 2), or SP3 (Speed selection 3) is incorrect in the speed control mode or the torque control mode.	Check SP1 (Speed selection 1), SP2 (Speed selection 2), and SP3 (Speed selection 3), and then check if the selected internal speed is correct.	Review the settings of SP1 (Speed selection 1), SP2 (Speed selection 2), SP3 (Speed selection 3), and setting of internal speed.	[A]
	An analog signal is not input correctly in the speed control mode or the torque control mode.	Check the values of the analog speed command and the analog torque command using the status display or MR Configurator2.	Input the analog signal correctly.	
	The selection of SPD1 (Speed selection 1), SPD2 (Speed selection 2), SPD3 (Speed selection 3), or SPD4 (Speed selection 4) is incorrect in the positioning mode (point table method) with BCD input.	Check SPD1 (Speed selection 1), SPD2 (Speed selection 2), SPD3 (Speed selection 3) and SPD4 (Speed selection 4), and then check if the selected internal speed is correct.	Review the wiring Review the settings of SPD1 (Speed selection 1), SPD2 (Speed selection 2), SPD3 (Speed selection 3), SPD4 (Speed selection 4), and setting of internal speed.	
	An analog signal is not input correctly in the positioning mode (point table method and program method).	Check the value of VC (Analog override) using the status display or MR Configurator2.	Set the VC (Analog override) and input the analog signal correctly.	
	The selection of OV0 (Digital override selection 1), OV1 (Digital override selection 2), OV2 (Digital override selection 3), or OV3 (Digital override selection 4) is incorrect in the positioning mode (indexer method).	Check OV0 (Digital override selection 1), OV1 (Digital override selection 2), OV2 (Digital override selection 3) and OV3 (Digital override selection 4), and then check if the selected override level ([%]) is correct.	Review the wiring Review the settings of OV0 (Digital override selection 1), OV1 (Digital override selection 2), OV2 (Digital override selection 3), and OV3 (Digital override selection 4).	
The servo motor vibrates with low frequency.	The estimated value of the load to motor inertia ratio by auto tuning is incorrect. When the load to motor inertia ratio is set by manual, the setting value is incorrect.	If the servo motor may be driven with safety, repeat acceleration and deceleration several times to complete auto tuning. Check if the load to motor inertia ratio is proper compared with the actual ratio for manual setting.	Execute auto tuning and one-touch tuning to reset the load to motor inertia ratio. Set the load to motor inertia ratio correctly for manual setting.	[A] [B] [WB] [RJ010] [GF]
	The command from the controller is unstable.	Check the command from the controller.	Review the command from the controller. Check the cable for command if there is failure such as disconnection.	
	Torque or thrust during acceleration/deceleration is overshooting exceeding the limit of the servo motor when the motor stops.	Check the effective load ratio during acceleration/deceleration if torque/thrust exceeds the maximum torque/thrust.	Reduce the effective load ratio by increasing acceleration/deceleration time and reducing load.	
	The servo gain is low. Or the response of auto tuning is low.	Check if the trouble is solved by increasing auto tuning response ([Pr. PA09]).	Adjust gains.	

Description	Cause	Checkpoint	Action	Target
An unusual noise is occurring at the servo motor.	The servo gain is low. Or the response of auto tuning is low.	Check if the trouble is solved by increasing auto tuning response ([Pr. PA09]).	Adjust gains.	[A] [B] [WB] [RJ010] [GF]
	Bearing life expired.	If the servo motor may be driven with safety, remove the load and check the noise with the servo motor only. If you can remove the servo motor from machine, remove the servo motor power cable to release the brake and check the noise by rotating the shaft by your hands.	Noising means that the bearing life expired. Replace the servo motor. When not noising, maintain the machine.	
	For a servo motor with an electromagnetic brake, the brake has not released.	Check the power supply of the electromagnetic brake.	Turn on the electromagnetic brake power.	
	For a servo motor with an electromagnetic brake, the brake release timing is not correct.	Check the brake release timing.	Review the brake release timing. Please consider that the electromagnetic brake has release delay time.	
The servo motor vibrates.	The servo gain is too high. Or the response of auto tuning is too high.	Check if the trouble is solved by reducing auto tuning response ([Pr. PA09]).	Adjust gains.	[A] [B] [WB] [RJ010] [GF]
	The machine is vibrating (resonating).	If the servo motor may be driven with safety, check if the trouble is solved by one-touch tuning or adaptive tuning.	Adjust the machine resonance suppression filter.	
	The load side is vibrating.	If the servo motor may be driven with safety, check if the trouble is solved by advanced vibration suppression control II.	Execute the advanced vibration suppression control II.	
	Feedback pulses are being miscounted due to entered noise into an encoder cable.	Check the cumulative feedback pulses using status display (only [A]) or MR Configurator2 if its numerical value is skipped.	Please take countermeasures against noise by laying the encoder cable apart from power cables, etc.	
	There is a backlash between the servo motor and machine (such as gear, coupling).	Check if there is a backlash on the machine.	Adjust the backlash on the coupling and machine.	
	The rigidity of the servo motor mounting part is low.	Check the mounting part of the servo motor.	Increase the rigidity of the mounting part by such as increasing the board thickness and by reinforcing the part with ribs.	
	The connection of the servo motor is incorrect.	Check the wiring of U/V/W.	Connect it correctly.	
	An unbalanced torque of the machine is large.	Check if the vibration varies depending on the speed.	Adjust balance of the machine.	
	The eccentricity due to core gap is large.	Check the mounting accuracy of the servo motor and machine.	Review the accuracy.	
	A load for the shaft of the servo motor is large.	Check the load for the shaft of the servo motor.	Adjust the load for the shaft to within specifications of the servo motor. For the shaft permissible load, refer to "Servo Motor Instruction Manual (Vol. 3)".	
	An external vibration propagated to the servo motor.	Check the vibration from outside.	Prevent the vibration from the external vibration source.	

Description	Cause	Checkpoint	Action	Target
The rotation accuracy is low. (The speed is unstable.)	The servo gain is low. Or the response of auto tuning is low.	Check if the trouble is solved by increasing auto tuning response ([Pr. PA09]).	Adjust gains.	[A] [B] [WB] [RJ010] [GF]
	The torque is insufficient due to large load.	Check instantaneous torque using status display (only [A]) or MR Configurator2 if the load exceeds the maximum torque or torque limit value.	Reduce the load or use a larger capacity servo motor.	
	An unintended torque limit has been enabled.	Check if TLC (Limiting torque) is on using status display or MR Configurator2.	Cancel the torque limit.	
	The setting of the torque limit is incorrect.	Check if the limiting torque is too low. [A]: [Pr. PA11] and [Pr. PA12], or analog input [B] [WB] [RJ010]: Setting on controller side [GF]: [Pr. PA11], [Pr. PA12], or setting on controller side	Set it correctly.	
	For a servo motor with an electromagnetic brake, the brake has not released.	Check the power supply of the electromagnetic brake.	Turn on the electromagnetic brake power.	
	The command from the controller is unstable.	Check the ripple of the command frequency with MR Configurator2.	Review the command from the controller. Check the cable for command if there is failure such as disconnection.	
The machine vibrates unsteadily when it stops.	The servo gain is low. Or the response of auto tuning is low.	Check if the trouble is solved by increasing auto tuning response ([Pr. PA09]).	Adjust gains.	[A] [B] [WB] [RJ010] [GF]
The servo motor starts to drive immediately after power on of the servo amplifier. The servo motor starts to drive immediately after servo-on.	SON (Servo-on) is on at power on.	Check if SON (Servo-on) and RD (Ready) are on using status display or MR Configurator2.	Review the sequence of SON (Servo-on).	[A]
	An analog signal is inputted from the beginning.	Check the status of analog speed command and analog torque command using status display or MR Configurator2.	Review the timing of inputting analog signals.	
	Zero point of an analog signal deviates.	Check if the servo motor drives while 0 V is inputted to the analog signal.	Execute the VC automatic offset or adjust offset of the analog signal with [Pr. PC37] or [Pr. PC38].	
	For a servo motor with an electromagnetic brake, the brake release timing is not correct.	Check the brake release timing.	Review the brake release timing.	[A] [B] [WB] [RJ010] [GF]
	The connection of the servo motor is incorrect.	Check the wiring of U/V/W.	Connect it correctly.	
Home position deviates at home position return.	For the dog type home position return, the point which the dog turns off and the point which Z-phase pulse is detected (CR input position) are too close.	Check if a fixed amount (in one revolution) deviates.	Adjust the dog position.	[A] [B] [WB] [RJ010] [GF]
	The in-position range is too large.	Check the setting of the in-position range in [Pr. PA10].	Set a narrower in-position range.	
	The proximity dog switch is failure. Or mounting proximity dog switch is incomplete.	Check if the proximity dog signal is inputted correctly.	Repair or replace the proximity dog switch. Adjust the mounting of the proximity dog switch.	
	The program on the controller side is incorrect.	Check the program on the controller side such as home position address settings or sequence programs.	Review the programs on the controller side.	

Description	Cause	Checkpoint	Action	Target
The position deviates during operation after home position return.	The position command and actual machine position are different.	Check that "cumulative feedback pulses × travel distance per pulse" matches the actual machine position. Check if "cumulative feedback pulses × feed length multiplication" matches the actual machine position.	Review the position command and electronic gear setting.	[A] [B] [WB] [RJ010] [GF]
	The position command and actual machine position are different.	Check that "cumulative feedback pulses × travel distance per pulse" matches the actual machine position. Check if "cumulative feedback pulses × feed length multiplication" matches the actual machine position.	Review the position command and electronic gear setting.	
	An alarm or warning is occurring.	Check if an alarm or warning is occurring.	Check the content of the alarm/ warning and remove its cause.	
	The servo gain is low. Or the response of auto tuning is low.	Check if the trouble is solved by increasing auto tuning response ([Pr. PA09]).	Adjust gains.	
	The reduction ratio is not calculated correctly for the geared servo motor.	Check the following settings. [A]: Number of command input pulses per revolution ([Pr. PA05]) or electronic gear ([Pr. PA06] and [Pr. PA07]) [B] [WB] [RJ010]: Number of pulses per revolution, travel distance (setting on the controller side) [GF]: Electronic gear ([Pr. PA06], [Pr. PA07])	Review the calculation of the reduction ratio.	
	The in-position range is too large.	Check the setting of the in-position range in [Pr. PA10].	Set a narrower in-position range.	

Description	Cause	Checkpoint	Action	Target
The position deviates during operation after home position return.	The command pulses were miscounted due to noise.	Check that the command value of the controller and the number of cumulative command pulses are matched.	Please take countermeasures against noise for the command cable. Review the shield procedure of the command cable.	[A]
	The cable for a command is connected loosely or disconnected.	Check that the command value of the controller and the number of cumulative command pulses are matched.	Repair the cable for a command.	
	Frequency of the pulse train command is too high.	Check the pulse train command frequency is within the range of specifications. It is 500 kpulses/s or less for the open-collector type. It is 4 Mpulses/s or less for the differential line driver type.	Review the pulse train command frequency. Select a filter according to the pulse train command frequency from "Command input pulse train filter selection" in [Pr. PA13].	
	A cable for command is too long.	Check the ripple of the command frequency with oscilloscope.	Shorten the wiring length. Cable length must be 10 m or shorter for differential line driver output and 2 m or shorter for open-collector output.	
	SON (Servo-on) turned off during operation.	Check if SON (Servo-on) is off during operation using status display or MR Configurator2.	Review the wiring and sequence not to turn off SON (Servo-on) during operation.	
	CR (Clear) or RES (Reset) turned on during operation.	Check if CR (Clear) or RES (Reset) is on during operation using status display or MR Configurator2.	Review the wiring and sequence not to turn on CR (Clear) or RES (Reset) during operation.	
	The setting of point tables and start timing is incorrect.	Check if a time period from after switching timings of point table setting value and point table No. until a start timing is 3 ms or more.	Review the point table setting. Review the start timing.	
	An input signal to the MR-D01 extension IO unit is incorrect.	Check the selection of the point table No. selection 1 to point table No. selection 8 and check the wiring.	Check the input signal switch to the MR-D01 extension IO unit and check the wiring.	
	The program, start timing, etc. are incorrect.	Check if a time period from after switching timings of BCD input program and point table No. until a start timing is 3 ms or more, etc.	Review the controller programs.	
	The setting of MR-DS60 digital switch is incorrect.	Check the [Pr. Po10] setting.	Review the [Pr. Po10] setting.	
	The wiring between MR-DS60 digital switch and MR-D01 extension IO unit is incorrect.	Check the wiring between MR-DS60 digital switch and MR-D01 extension IO unit.	Review the wiring between MR-DS60 digital switch and MR-D01 extension IO unit.	
	Wiring of the MR-HDP01 manual pulse generator or setting of "manual pulse generator multiplication" ([Pr. PT03], TP0 (manual pulse generator multiplication 1), TP1 (manual pulse generator multiplication 2)) is incorrect.	The input value from the MR-HDP01 manual pulse generator and the command position do not match.	Review the wiring. Set the multiplication setting correctly.	
	A mechanical slip occurred. Or the backlash of the machine part is large.	Check if there is a slip or backlash on the machine part.	Adjust the machine part.	[A] [B] [WB] [RJ010] [GF]

Description	Cause	Checkpoint	Action	Target
A restoration position deviates at restoration of power for the absolute position detection system.	The motor was rotated exceeding the maximum permissible speed at power failure (6000 r/min) by an external force during servo amplifier power off. (Note: The acceleration time is 0.2 s or less.)	Check if the motor was accelerated suddenly to 6000 r/min by an external force.	Extend the acceleration time.	[A] [B] [WB] [RJ010] [GF]
	The servo amplifier power turned on while the servo motor was rotated exceeding 3000 r/min by an external force.	Check if the servo amplifier power turned on while the servo motor was rotated exceeding 3000 r/min by an external force.	Review the power-on timing.	
	Transfer data to the controller is incorrect.	Check the ABS data with MR Configurator2.	Review the controller programs.	[A]
Overshoot/undershoot occurs.	The servo gain is low or too high. The response of auto tuning is low or too high.	Check the velocity waveform with a graph using MR Configurator2 if overshoot/ undershoot is occurring.	Adjust the response of auto tuning and execute the gain adjustment again.	[A] [B] [WB] [RJ010] [GF]
	The setting of [Pr. PB06 Load to motor inertia ratio/ load to motor mass ratio] is incorrect.	Check that the setting value of [Pr PB06 Load to motor inertia ratio/ load to motor mass ratio] and the actual load moment of inertia or load mass are matched.	Set it correctly.	
	Capacity shortage or shortage of the maximum torque (thrust) due to too large load.	Check the instantaneous torque using status display if the maximum torque (maximum thrust) exceeds the torque limit value (thrust limit value).	Reduce the effective load ratio by increasing acceleration/ deceleration time and reducing load.	
	The setting of the torque limit is incorrect.	Check the instantaneous torque using status display if the maximum torque (maximum thrust) exceeds the torque limit value (thrust limit value).	Review the torque limit setting.	
	Backlash of the machine part is large.	Check if there is a backlash on the machine part.	Adjust the backlash on the coupling and machine part.	
A communication with servo amplifier fails using MR Configurator2. (For details, refer to Help of MR Configurator2.)	The communication setting is incorrect.	Check the communication setting such as baud rate and ports.	Set the communication setting correctly.	[A] [B] [WB] [RJ010] [GF]
	A model is being connected other than the model set in model selection.	Check if the model selection is set correctly.	Set the mode selection correctly.	
	The driver was not set correctly.	Check the bottom of the USB (Universal Serial Bus) controller with the device manager of the personal computer if "MITSUBISHI MELSERVO USB Controller" is being displayed.	Delete an unknown device or other devices, cycle the power of the servo amplifier, and reset according to Found New Hardware Wizard.	
	They are off-line status.	Check if they are off-line.	Set them to on-line.	
	A communication cable is malfunctioning.	Check if the communication cable is malfunctioning.	Replace the communication cable.	
For a servo motor with an electromagnetic brake, the brake went out.	The electromagnetic brake is failure due to its life. For the life of electromagnetic brake, refer to "Servo Motor Instruction Manual (Vol. 3)".	Remove the servo motor and all wirings from the machine and check if the servo motor shaft can be rotated by hands. (If it is rotated by hands, the brake is failure.)	Replace the servo motor.	[A] [B] [WB] [RJ010] [GF]
The coasting distance of the servo motor became longer.	The load was increased and permissible load to motor inertia ratio was exceeded.	Check if the load was increased.	Reduce the load.	[A] [B] [WB] [RJ010] [GF]
	An external relay is malfunctioning. Or the wiring of MBR (Electromagnetic brake interlock) is incorrect.	Check the external relay and wirings connected to MBR (Electromagnetic brake interlock) if they are malfunctioning.	Replace the external relay. Or review the wiring.	
	The electromagnetic brake is failure due to its life. For the life of electromagnetic brake, refer to "Servo Motor Instruction Manual (Vol. 3)".	Remove the servo motor and all wirings from the machine and check if the servo motor shaft can be rotated by hands. (If it is rotated by hands, the brake is failure.)	Replace the servo motor.	

Description	Cause	Checkpoint	Action	Target
The program operation is not in progress.	The command speed of the positioning operation is low.	An abnormal value such as 0 [r/min] was set for specifying the servo motor speed.	Review the program.	[A]
	The program stops at the state of waiting for external signal on.	A program input number set with SYNC command does not match with the actual inputted signal.	Review the program or signal to use.	
A point table was executed but the operation did not start.	A positioning to the same position is repeated.	Multiple operation starts which have the same specified number of point table are in progress.	Review the setting of the point table or procedures of the operation.	[A] [GF]
		Positioning to a same point was endlessly repeated with automatic continuous operation "8, 9, 10, 11" was selected in sub functions of the point table operation.	Review the setting of the point table or procedures of the operation.	
The electromagnetic brake cannot be canceled.	The wiring is incorrect.	Check the SBC output signal.	Review the output signals.	[B]
	A signal of output device is not outputted correctly.	Check if the output device cable is wired correctly. Or check if a load of output device is over specifications.	Review the wiring or load.	
	The functional safety unit is malfunctioning.	Replace the functional safety unit, and then check the repeatability.	Replace the functional safety unit.	
A vertical axis falls while the SBC output is used.	The STO function is used during servo-on.	Check if the SS1 function is enabled.	Enable the SS1 function.	[B]
	A signal of output device is not outputted correctly.	Check if the output device cable is wired correctly. Or check if a load of output device is over specifications.	Review the wiring or load.	
	The functional safety unit is malfunctioning.	Replace the functional safety unit, and then check the repeatability.	Replace the functional safety unit.	
	The setting of a waiting time of the electromagnetic brake sequence output is incorrect.	Check if [Pr. PC02 Electromagnetic brake sequence output] and [Pr. PSA03 SS1 monitoring deceleration time] are set correctly.	Set it correctly.	
Modbus RTU communication is not established.	The servo amplifier is not set to Modbus RTU communication protocol.	Check if "communication protocol selection" in [Pr. PC71] is correctly set.	Select Modbus RTU protocol.	[A]
	The communication setting is not set correctly.	Check if [Pr. PC70 Modbus RTU communication station number setting] is set correctly.	Check [Pr. PC70 Modbus RTU communication station number setting] and the station No. specified in a Query message from the controller if they are matched together.	
		Check if "Modbus RTU communication baud rate selection" in [Pr. PC71] is set correctly.	Check "Modbus RTU communication baud rate selection" and the communication baud rate setting of the controller if they are matched together.	
		Check if "Modbus RTU communication parity selection" in [Pr. PF45] is set correctly.	Check "Modbus RTU communication parity selection" and the parity setting of the controller if they are matched together.	
	The servo amplifier is not compatible with Modbus RTU communication.	For MR-J4-_A_-RJ 100 W or more servo amplifier, check that the servo amplifier was manufactured in January 2015 or later. Check if MR-J4-_A_ servo amplifier or MR-J4-03A6(-RJ) servo amplifier is being used.	For MR-J4-_A_-RJ 100 W or more servo amplifier, use the one manufactured in January 2015 or later. (MR-J4-_A_ servo amplifier or MR-J4-03A6(-RJ) servo amplifier is not compatible with Modbus RTU communication.)	
	A communication cable is malfunctioning.	Check if the communication cable has any failure such as damage.	Replace the communication cable.	

Description	Cause	Checkpoint	Action	Target
RS-422 communication (Mitsubishi Electric general-purpose AC servo protocol) is not established.	The servo amplifier is not set to RS-422 communication protocol.	Check if "communication protocol selection" in [Pr. PC71] is correctly set.	Select RS-422/RS-485 communication (Mitsubishi Electric general-purpose AC servo protocol).	[A]
	The communication setting is not set correctly.	Check if [Pr. PC20 Station number setting] is set correctly.	Check [Pr. PC20 Station number setting] and the station No. specified by the controller if they are matched together.	
		Check if "RS-422 communication baud rate selection" in [Pr. PC21] is set correctly.	Check "RS-422 communication baud rate selection" and the communication baud rate setting of the controller if they are matched together.	
	A communication cable is malfunctioning.	Check if the communication cable has any failure such as damage.	Replace the communication cable.	
CC-Link IE Field Network Basic communication or SLMP is not established.	The IP address is not set correctly.	Check if [Pr. PN11 IP address setting A] and [Pr. PN12 IP address setting B] are set correctly.	Check if the parameter setting values match the designated IP address of the controller.	[GF]
		Check if [Pr. PN13 Subnet mask setting A] and [Pr. PN14 Subnet mask setting B] are set correctly.	Check if the parameter setting values are set correctly.	
	The IP address filter is not set correctly.	Check if [Pr. PN18 IP address filter A] and [Pr. PN19 IP address filter B] are set correctly.	Check if the parameter setting values match the address of external devices.	
		Check if [Pr. PN20 IP address filter A range specification] and [Pr. PN21 IP address filter B range specification] are set correctly.	Check if the parameter setting values are set correctly.	
	The designated operation IP address is not set correctly.	Check if [Pr. PN22 Operation specification IP address A] and [Pr. PN23 Operation specification IP address B] are set correctly.	Check if the parameter setting values match the IP address of the controller that transmits commands.	
		Check if [Pr. PN24 Operation specification IP address range specification] is set correctly.	Check if the parameter setting values are set correctly.	
	TCP is selected.	Check if TCP is selected with the communication setting.	Select UDP.	
	An Ethernet cable is malfunctioning.	Check if the Ethernet cable has any failure such as damage.	Replace the Ethernet cable.	
When CC-Link IE Field Network Basic is used, the servo motor stopped while the control command is on.	An alarm or warning is occurring.	Check if an alarm or warning is occurring.	Check the contents of the alarm/ warning, and remove its cause.	
	The link device (cyclic communication ready) is off.	Check if the controller does not turn off the cyclic communication ready command.	Turn on the cyclic communication ready command.	
	An Ethernet cable was disconnected.	Check if the cable is disconnected from the connector (CN1).	Connect it correctly.	
	An Ethernet cable is malfunctioning.	Check if the Ethernet cable has any failure such as damage.	Replace the Ethernet cable.	

*1 ## indicates axis No.

1.7 Network module error codes

If an error occurs in the network module, a network module error code will be displayed in "Alarm Display" of MR Configurator2.

For details of the network module error codes, refer to "Exception Codes" of "Anybus CompactCom 40 Software Design Guide (Doc.Id. HMSI-216-125)".

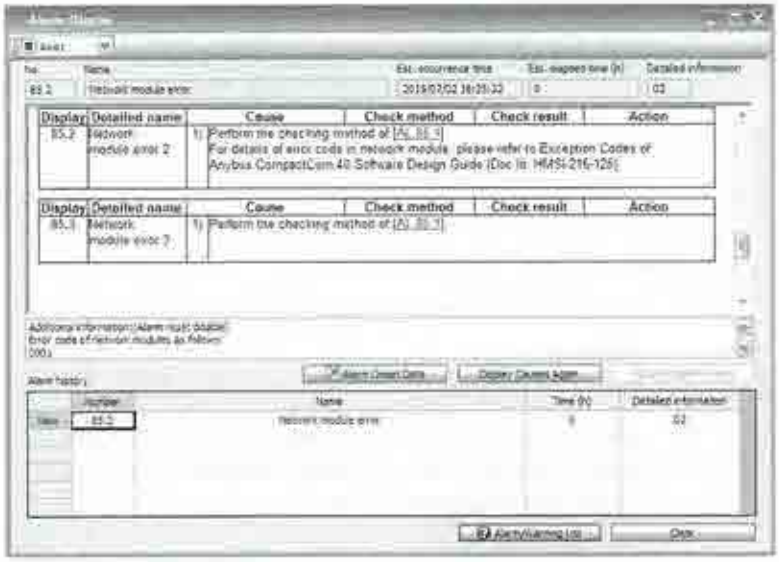

CLIMAX
BORTECH
CALDER
H&S TOOL