CM6200

RUNDFRÄSMASCHINE

CM6200 BETRIEBSANLEITUNG

ORIGINALE ANWEISUNGEN

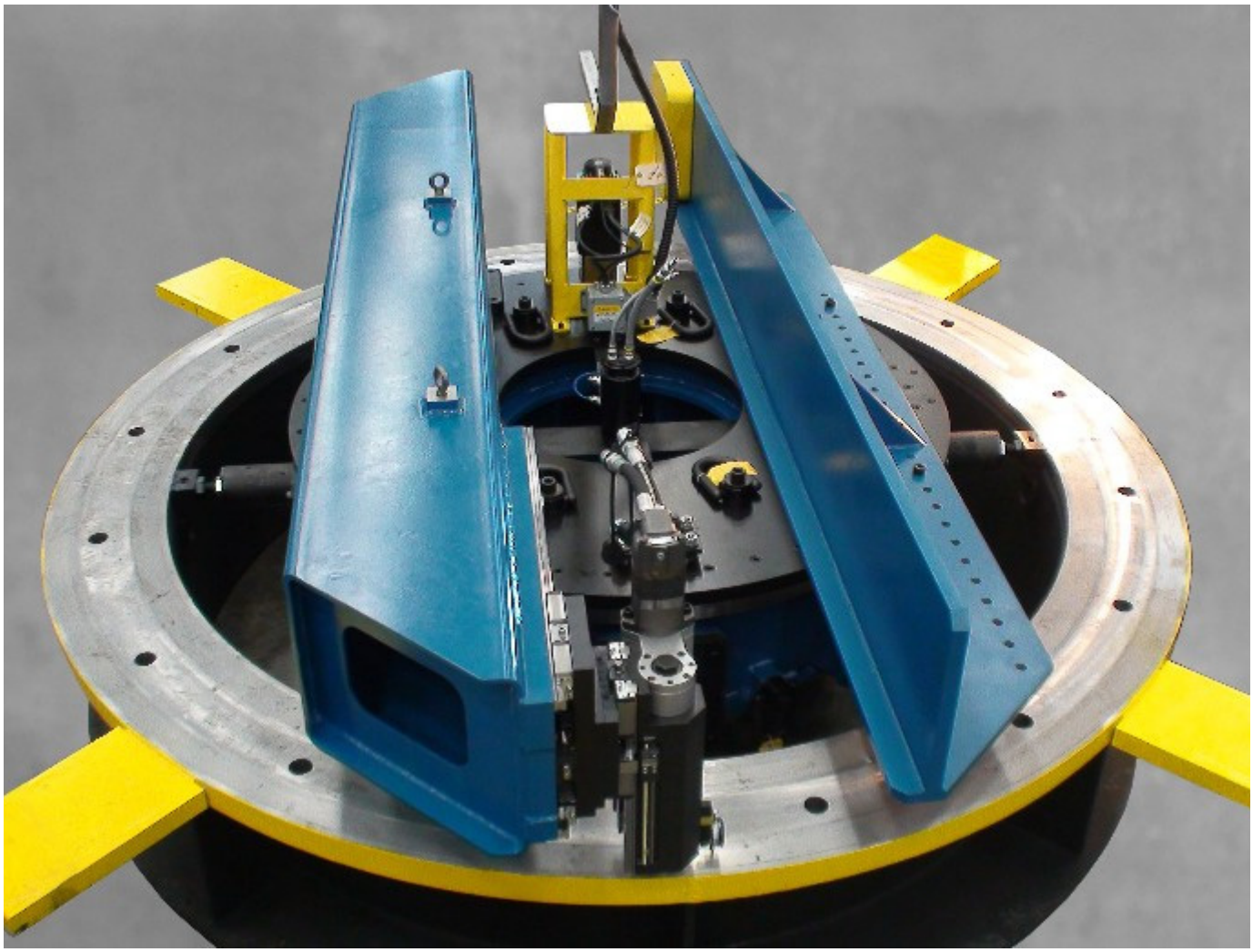

CLIMAX
Portable Machining & Welding Systems

P/N 63674-G
February 2022
Revision 9

CLIMAX | BORTECH CALDER H&S TOOL

Ihre Meinung ist CLIMAX wichtig.

Für Kommentare oder Fragen zu dieser Anleitung oder einer anderen CLIMAX-Dokumentation senden Sie bitte eine E-Mail an
documentation@cpmt.com.

Für Kommentare oder Fragen zu CLIMAX-Produkten oder zu unseren Dienstleistungen rufen Sie CLIMAX an oder senden Sie eine E-Mail an info@cpmt.com. Für eine schnelle und spezifische Behandlung Ihrer Anliegen stellen Sie Ihrem Vertragshändler bitte folgende Angaben zur Verfügung:

- Ihren Namen
- Versandadresse
- Telefonnummer
- Gerätetyp
- Seriennummer (falls vorhanden)
- Kaufdatum

CLIMAX Konzernzentrale

2712 East 2nd Street
Newberg, Oregon 97132 USA

Telefon (weltweit): +1-503-538-2815
Gebührenfrei (Nordamerika): +1-800-333-8311
Fax: 503-538-7600

H&S Tool Hauptsitz

715 Weber Dr.
Wadsworth, OH 44281 USA

Telefon: +1-330-336-4550
Fax: +1-330-336-9159
hstool.com

CLIMAX | H&S Tool (Hauptsitz GB)

Unit 7 Castlehill Industrial Estate
Bredbury Industrial Park
Horsfield Way
Stockport SK6 2SU, GB

Telefon: (+44) (0) 161-406-1720

CLIMAX | H&S Tool (Hauptsitz Europa)

Am Langen Graben 8
52353 Düren, Deutschland

Telefon: +49 24-219-1770
E-Mail: ClimaxEurope@cpmt.com

CLIMAX | H&S Tool (Hauptsitz Asien-Pazifik)

316 Tanglin Road #02-01
Singapur 247978

Telefon: +65-9647-2289
Fax: +65-6801-0699

CLIMAX | H&S Tool (Hauptsitz Mittlerer Osten)

Warehouse Nr. 5, Plot: 369 272
Um Sequim Road
Al Quoz 4
PO Box 414 084
Dubai, VAE

Telefon: +971-04-321-0328

WELTWEITE STANDORTE VON CLIMAX

CE-DOKUMENTATION

Declaration of Conformity

2006/42/EC Machinery Directive

2014/35/EU Low Voltage Directive

2014/30/EU EMC Directive

Name of Manufacturer:
Climax Portable Machining and Welding Systems
Full postal address including country of origin:
2712 E. Second St., Newberg, OR 97132, USA
Object(s) of the Declaration:
Portable Milling Machine(s)

Name, type or model, batch or serial number:
CM6200 S/N Range: 150000268 and up
Harmonised Standards used, including number:
BS EN ISO 13854:2019 - Safety of Machinery; Gaps
BS EN ISO 4413:2010 - Safety of Machinery; Fluid Power
EN ISO 11201:2010 - Acoustics; Noise Emitted
EN ISO 12100:2010 - Safety for Machinery; Principles
EN ISO 13732-1:2008 - Temperature of Touchable Surfaces
EN 60204-1:2018 - Safety of Machinery; Electrical Equipment
EN 61000 series - EMC Emissions and Immunity
EN ISO 13849-1:2015 - Safety of Machinery; Controls
EN ISO 13850: Safety of Mach-E Stop
EN ISO 13857:2019 Safety of mach-Safe Distances

Full postal address of the authorized person in the Community:
Guido Ewers zum Rode
Climax GmbH
Am Langen Graben 8
52353 Duren, Germany

Approved as conforming to Standard ISO 9001:2015 by:
Eagle Registrations Inc.
40 N. Main Street, Suite 1880
Dayton, OH 45423

Declaration
I declare that the above information in relation to the supply / manufacture of this product is in conformity with the relevant provisions of the Directives and Harmonised Standards listed above in this document along with their respective amendments and other related documents. This declaration of conformity is issued under the sole responsibility of the manufacturer.

Signature of Manufacturer: _____ **Position: VP of Engineering**

Date and Place: 3/2/2022, **USA**

CE

CE	Norm Nr. **EN 3744 & EN 11201**	CLIMAX

Der erklärte **Schallleistungspegel** beträgt:	L_{WA}=	74,4	dBA
Der erklärte ***Schalldruckpegel*** für den Bediener beträgt:	L_{pA}=	65,2	dBA
Der erklärte ***Schalldruckpegel* für Umstehende** beträgt:	L_{pA}=	65,3	dBA

BESCHRÄNKTE GARANTIE

Climax Portable Machine Tools, Inc (im Folgenden als „CLIMAX“ bezeichnet) garantiert, dass alle neuen Maschinen frei von Material- und Verarbeitungsfehlern sind. Diese Garantie gilt für den Erstkäufer für einen Zeitraum von einem Jahr nach der Lieferung. Wenn der Erstkäufer innerhalb der Garantiezeit einen Material- oder Verarbeitungsfehler feststellt, sollte er sich an seinen Werksvertreter wenden und die gesamte Maschine mit vorausbezahltem Versand an das Werk zurücksenden. Im Ermessen von CLIMAX wird die defekte Maschine entweder kostenlos repariert oder ersetzt und auf Kosten von CLIMAX an den Kunden zurückgesendet.

CLIMAX garantiert, dass alle Teile frei von Material- und CLIMAX garantiert, dass alle Teile frei von Material- und Verarbeitungsfehlern sind und dass alle Arbeiten ordnungsgemäß ausgeführt wurden. Diese Garantie steht dem Kunden, der Teile oder Arbeiten erwirbt, für einen Zeitraum von 90 Tagen nach Lieferung des Teils oder der reparierten Maschine bzw. 180 Tagen bei gebrauchten Maschinen und Komponenten zur Verfügung. Wenn der Kunde, der Teile oder Arbeiten erwirbt, innerhalb der Garantiezeit einen Material- oder Verarbeitungsfehler feststellt, sollte er sich mit seinem Werksvertreter in Verbindung setzen und das Teil oder die reparierte Maschine frachtfrei an das Werk zurücksenden. Im Ermessen von CLIMAX wird das defekte Teil entweder durch den Hersteller kostenlos repariert oder ersetzt und/oder der Reparaturmangel kostenlos behoben und das Teil oder die reparierte Maschine frei Haus zurückgesendet.

Diese Garantie gilt nicht für:

- Schäden nach dem Versanddatum, die nicht durch Material- oder Verarbeitungsfehler verursacht wurden
- Schäden durch unsachgemäße oder unangemessene Wartung
- Schäden durch nicht autorisierte Änderung oder Reparatur des Geräts
- Schäden durch Missbrauch
- Schäden durch Gebrauch der Maschine über ihre Nennkapazität hinaus

Alle ausdrücklichen oder stillschweigenden sonstigen Gewährleistungen, einschließlich, aber nicht beschränkt auf die Gewährleistung von Marktgängigkeit und die Eignung für einen bestimmten Zweck, werden abgelehnt und ausgeschlossen.

Verkaufsbedingungen

Lesen Sie unbedingt die Verkaufsbedingungen, die Sie auf der Rückseite Ihrer Rechnung finden. Diese Bedingungen bestimmen und beschränken Ihre Rechte in Bezug auf die von CLIMAX gekauften Waren.

Über diese Betriebsanleitung

CLIMAX stellt den Inhalt dieser Anleitung nach Treu und Glauben als Richtlinie für den Bediener zur Verfügung. CLIMAX kann nicht garantieren, dass die in dieser Betriebsanleitung enthaltenen Informationen für Anwendungen richtig sind, die nicht der in dieser Betriebsanleitung beschriebenen Anwendung entsprechen. Produktspezifikationen können ohne vorherige Ankündigung geändert werden.

INHALTSVERZEICHNIS

INHALTSVERZEICHNIS (FORTSETZUNG)

KAPITEL/ABSCHNITT **SEITE**

INHALTSVERZEICHNIS (FORTSETZUNG)

KAPITEL/ABSCHNITT **SEITE**

INHALTSVERZEICHNIS (FORTSETZUNG)

ABBILDUNGSVERZEICHNIS

ABBILDUNG **SEITE**

ABBILDUNGSVERZEICHNIS (FORTSETZUNG)

ABBILDUNGSVERZEICHNIS (FORTSETZUNG)

ABBILDUNGSVERZEICHNIS (FORT-SETZUNG)

LISTE DER TABELLEN

TABELLE **SEITE**

Diese Seite bleibt leer

1 EINLEITUNG

IN DIESEM KAPITEL:

1.1 Hinweise zur Benutzung dieser Betriebsanleitung

Diese Betriebsanleitung gibt Informationen, die für Einrichtung, Betrieb, Wartung, Lagerung, Versand und Außerbetriebnahme der Maschine CM6200 erforderlich sind.

Die erste Seite jedes Kapitels enthält eine Zusammenfassung des Inhalts des Kapitels, die dazu dient, Informationen leichter zu finden. Die Anhänge enthalten ergänzende Produktinformationen für Einrichtung, Bedienung und Wartung.

Lesen Sie vor der Einrichtung und dem Betrieb diese gesamte Anleitung durch, um sich mit der Maschine CM6200 ausreichend vertraut zu machen.

1.2 Sicherheitswarnungen

Achten Sie besonders auf die Sicherheitshinweise in diesem Betriebshandbuch. Sicherheitswarnungen weisen Sie auf besondere Gefahrensituationen hin, die beim Betrieb dieser Maschine auftreten können. Beispiele für in diesem Handbuch verwendete Sicherheitswarnungen sind wie folgt definiert:[1]

DANGER

weist auf eine gefährliche Situation hin, die, wenn sie nicht vermieden wird, zu Tod oder schweren Verletzungen ***FÜHRT***

1. Für weitere Informationen zu Sicherheitshinweisen finden nehmen Sie auf *ANSI/NEMA Z5356-2011, den Produktsicherheitsinformationen in Produkthandbüchern, Anweisungen und anderen sicherheitsrelevanten Dokumenten Bezug*

⚠ WARNING

weist auf eine gefährliche Situation hin, die, wenn sie nicht vermieden wird, zu Tod oder schweren Verletzungen führen ***KANN***

⚠ CAUTION

weist auf eine gefährliche Situation hin, die, wenn sie nicht vermieden wird, zu leichten oder mittelschweren Verletzungen führen kann

NOTICE

weist auf eine gefährliche Situation hin, die, wenn sie nicht vermieden wird, zu Sachschäden, Betriebsausfällen oder falschen Arbeitsergebnissen führen kann

1.3 ALLGEMEINE SICHERHEITSHINWEISE

CLIMAX ist führend bei der Entwicklung des sicheren Einsatzes von transportablen Werkzeugmaschinen. Sicherheit ist eine gemeinsame Aufgabe. Sie, der Endbenutzer, müssen Ihren Teil zur Arbeitssicherheit beitragen, indem Sie sich Ihrer Arbeitsumgebung bewusst sind und die in diesem Betriebshandbuch beschriebenen Betriebsverfahren und Sicherheitsvorkehrungen sowie die Sicherheitsrichtlinien Ihres Arbeitgebers genau befolgen.

Beachten Sie die folgenden Sicherheitsvorkehrungen, wenn Sie die Maschine bedienen oder in ihrer Umgebung arbeiten:

Schulung – Vor der Bedienung dieser oder einer anderen Werkzeugmaschine müssen Sie eine Einweisung von einer qualifizierten Person erhalten. Wenden Sie sich an CLIMAX für maschinenspezifische Schulungsinformationen.

Risikobewertung – Das Arbeiten mit und um diese Maschine herum birgt Risiken für Ihre Sicherheit. Sie als Endnutzer sind dafür verantwortlich, vor der Einrichtung und dem Betrieb dieser Maschine eine Risikobewertung der jeweiligen Arbeitsstelle durchzuführen.

Bestimmungsgemäße Verwendung – Verwenden Sie diese Maschine gemäß den Anweisungen und Vorsichtsmaßnahmen in dieser Anleitung. Verwenden Sie dieses Gerät nicht für eine andere als die in dieser Betriebsanleitung beschriebene Anwendung.

Persönliche Schutzausrüstung – Es ist stets eine geeignete persönliche Schutzausrüstung zu tragen, wenn diese oder eine andere Werkzeugmaschine bedient werden soll. Bei der Bedienung der Maschine wird schwer entflammbare Kleidung mit langen Ärmeln und Hosen empfohlen, da heiße Späne vom Werkstück springen und bloße Haut verbrennen und verletzen können.

Arbeitsbereich – Halten Sie den Arbeitsbereich um die Maschine herum sauber und aufgeräumt. Halten Sie die an das Gerät angeschlossenen Kabel und Schläuche zurück. Andere Kabel und Schläuche sind vom Arbeitsbereich fernzuhalten.

Heben – Viele der CLIMAX-Maschinenkomponenten sind sehr schwer. Nach Möglichkeit sind die Maschine und ihre Komponenten nur mit geeigneten Hebezeugen und Vorrichtungen anzuheben. Verwenden Sie dabei stets die dafür vorgesehenen Hebepunkte an der Maschine. Befolgen Sie die Anweisungen zum Heben in den Einrichtungsanweisungen dieser Betriebsanleitung.

Verriegeln/Kennzeichnen – Vor der Durchführung von Wartungsarbeiten ist die Maschine zu verriegeln und zu kennzeichnen.

Bewegliche Teile – CLIMAX-Maschinen verfügen über zahlreiche freiliegende bewegliche Teile und Schnittstellen, die schwere Schläge, Quetschungen, Schnittverletzungen und andere Verletzungen verursachen können. Abgesehen von der Bedienung von unbeweglichen Steuereinrichtungen ist der Kontakt mit allen beweglichen Teilen sowohl direkt als auch mittels Werkzeugen während des Betriebs der Maschine zu vermeiden. Ziehen Sie Handschuhe aus und sichern Sie Haare, Kleidung, Schmuck und Gegenstände in Taschen so, dass sie sich auf keinen Fall in beweglichen Teilen verfangen können.

Scharfe Kanten – Schneidwerkzeuge und Werkstücke haben scharfe Kanten, die die Haut leicht schneiden können. Tragen Sie Schutzhandschuhe und seien Sie vorsichtig beim Umgang mit einem Schneidwerkzeug oder Werkstück.

Heiße Oberflächen – Während des Betriebs können Motoren, Pumpen, Hydraulikpumpeneinheiten (HPE) und Schneidwerkzeuge Wärme in dem Ausmaß erzeugen, dass sie schwere Verbrennungen verursachen können. Achten Sie auf Kennzeichnungen von heißen Oberflächen und vermeiden Sie den Kontakt mit bloßer Haut, bis das Gerät abgekühlt ist.

1.4 MASCHINENSPEZIFISCHE SICHERHEITSHINWEISE

Gefährdung der Augen – Diese Maschine produziert während des Betriebs Metallspäne. Tragen Sie bei der Bedienung der Maschine immer einen Augenschutz.

Lärmpegel – Diese Maschine erzeugt Lärm, der möglicherweise einen gesundheitsschädlichen Schallpegel erreicht. Beim Betrieb dieses Geräts oder bei Arbeiten um das Gerät herum ist Gehörschutz erforderlich. Während der Prüfphase erzeugte die Maschine folgende Schallpegel[1]:

- Schallleistung – 74,4 dBA

1. Die Maschinenlärmprüfung wurde in Übereinstimmung mit den europäischen harmonisierten Normen EN ISO 3744:2010 und EN 11201:2010 durchgeführt.

- Schalldruck beim Bediener – 65,2 dBA
- Schalldruck in unmittelbarer Umgebung – 65,3 dBA

Gefährdende Umgebungen – Betreiben Sie die Maschine nicht in Umgebungen, in denen explosive Materialien, giftige Chemikalien oder Strahlung auftreten können. Setzen Sie das Gerät nicht Regen oder anderen nassen Bedingungen aus.

Rotierende Maschinenteile – Rotierende Maschinenteile können das Bedienpersonal schwerwiegend verletzen. Trennen Sie die Stromzufuhr, bevor Sie Arbeiten wie Wartungen an der Maschine vorgenommen werden.

Sichern Sie lose Kleidung und langes Haar – Rotierende Maschinen können schwerwiegende Verletzungen verursachen. Keine lose Kleidungs- oder Schmuckstücke tragen. Binden Sie langes Haar zurück oder tragen Sie eine entsprechende Kopfbedeckung.

Schläuche, Steuerkabel und Kabel zur Stromversorgung – Die folgenden Richtlinien sind einzuhalten:

- Verwenden Sie die Steuerkabel nicht für Zwecke außer zur Steuerung, da sonst Kabel und Steuerung beschädigt werden können.
- Kabel niemals zum Tragen, Ziehen oder Herausziehen der Steckverbindungen verwenden.
- Alle Schlaufen beseitigen, bevor Sie das Kabel gerade ziehen.
- Halten Sie Kabel und Schläuche von Hitze, Öl, scharfen Kanten und beweglichen Teilen fern.
- Die Stecker müssen zu der Steckverbindung passen.
- Niemals die Stecker in irgendeiner Weise verändern.
- Verwenden Sie für geerdete elektrische Werkzeuge keinen Adapterstecker.
- Setzen Sie das Gerät nicht Regen oder sonstigen nassen Umständen aus.
- Schläuche und Kabel vor der Verwendung immer auf Beschädigungen überprüfen.
- Achten Sie darauf, dass Sie keine elektrischen Geräte fallen lassen, da dies zu Schäden an den Komponenten führen kann.

Einstellungen und Wartung – Alle Einstellungen, Schmierung und Wartung sind bei gestoppter und von der Stromzufuhr getrennter Maschine durchzuführen. Das Absperrventil sollte verriegelt und gekennzeichnet sein, bevor eine Wartung durchgeführt wird.

Steuerungen –Die Maschinensteuerungen sind so ausgeführt, dass sie den Belastungen des normalen Betriebs und äußeren Einflüssen standhalten. Die Ein-/Aus-Schalter sind gut sichtbar und erkennbar. Bei einem Ausfall der Druckluftzufuhr ist darauf zu achten, dass das Ein-Aus-Ventil vor Verlassen der Maschine auf AUS steht.

1.5 Risikobewertung und Risikominderung

Werkzeugmaschinen sind speziell für präzise Materialabtragungen konzipiert.

Stationäre Werkzeugmaschinen sind u.a. Dreh- und Fräsmaschinen und sind oft in Metallbearbeitungsstätten vorzufinden. Sie werden während des Betriebs an einem festen Ort montiert und gelten als eine komplette, in sich abgeschlossene Maschineneinheit. Stationäre Werkzeugmaschinen erreichen die zur Materialabtragungen erforderliche Eigensteifigkeit mittels ihrer Struktur, die ein integraler Bestandteil der Werkzeugmaschine ist.

Transportable Werkzeugmaschinen sind für die Bearbeitung vor Ort konzipiert. Sie werden typischerweise direkt am Werkstück selbst oder an einer angrenzenden Struktur befestigt und erreichen ihre Steifigkeit mithilfe der Struktur, an der sie befestigt sind. Die Bauweise sieht vor, dass die transportable Werkzeugmaschine und die Struktur, an der sie befestigt ist, während der Materialabtragung zu einer kompletten Maschine werden.

Um die beabsichtigten Ergebnisse zu erzielen sowie Sicherheit zu gewährleisten, muss das Bedienpersonal das Konstruktionsprinzip, die Einrichtung und die Betriebsabläufe, die so nur bei transportablen Werkzeugmaschinen möglich sind, verstehen und befolgen.

Der Betreiber hat eine Gesamtüberprüfung und eine Risikobewertung der beabsichtigten Anwendung vor Ort durchzuführen. Aufgrund der Besonderheiten transportabler Werkzeugmaschinenanwendungen müssen typischerweise eine oder mehrere Gefahren identifiziert und angegangen werden.

Bei der Durchführung der Risikobewertung vor Ort ist es wichtig, die transportable Werkzeugmaschine und das Werkstück als Ganzes zu betrachten.

1.6 CHECKLISTE FÜR DIE RISIKOBEWERTUNG

Die folgende Checkliste ist nicht als allumfassende Liste von Punkten gedacht, auf die bei der Einrichtung und Bedienung dieser transportablen Werkzeugmaschine geachtet werden muss. Diese Checkliste beinhaltet typische Punkte zur Beachtung für Risiken, die der Monteur und das Bedienpersonal zu berücksichtigen haben. Verwenden Sie diese Checklisten als Teil Ihrer Risikobewertung:

TABELLE 1-1. CHECKLISTE FÜR DIE RISIKOBEWERTUNG VOR EINRICHTEN

	Vor dem Einrichten
☐	Ich habe alle Warnschilder an der Maschine beachtet.
☐	Ich habe alle identifizierten Risiken (wie Stolpern, Schneiden, Quetschen, Verfangen, Scheren oder Herunterfallen von Gegenständen) entfernt oder minimiert.
☐	Ich habe die Notwendigkeit von Personenschutzeinrichtungen beachtet und sämtliche erforderlichen Schutzeinrichtungen installiert.
☐	Ich habe die Anweisungen zur Einrichtung (Abschnitt 3) gelesen und verstanden und alle erforderlichen Werkzeuge (Abschnitt 1.8) bereitgestellt.
☐	Ich habe einen Hebeplan, einschließlich der Identifizierung der richtigen Aufhängepunkte für jedes Hebezeug, das während des Aufbaus der Tragkonstruktion und der Maschine benötigt wird, erstellt.
☐	Ich habe die Absturzwege lokalisiert, die bei Hebe- und Aufrüstarbeiten anfallen. Ich habe Vorkehrungen getroffen, um Mitarbeiter von den identifizierten Sturzpfaden fernzuhalten.
☐	Ich habe bedacht, wie diese Maschine funktioniert und die besten Positionen für die Steuerung, die Verkabelung und den Bediener identifiziert.
☐	Ich habe alle anderen für meinen Arbeitsbereich spezifischen, potenziellen Risiken bewertet und minimiert.

TABELLE 1-2. CHECKLISTE FÜR DIE RISIKOBEWERTUNG NACH DEM EINRICHTEN

	Nach dem Einrichten
☐	Ich habe überprüft, dass die Maschine sicher installiert (gemäß Abschnitt 3) und der mögliche Fallweg frei ist. Wenn das Gerät in einer erhöhten Position aufgestellt ist: Ich habe überprüft, dass das Gerät gegen Sturz gesichert ist.
☐	Ich habe alle möglichen Quetschstellen, z.B. durch rotierende Teile, identifiziert und das betroffene Personal informiert.
☐	Ich habe für das Auffangen von Spänen und Scherstücken beim Bearbeiten vorgesorgt.
☐	Die erforderlichen Wartungsintervalle (Abschnitt 5.1) mit den empfohlenen Schmierstoffen (Abschnitt 5.3) habe ich eingehalten.
☐	Ich habe überprüft, dass alle betroffenen Personen über empfohlene persönliche Schutzausrüstungen sowie über die vom Standort geforderte oder gesetzlich vorgeschriebene Ausrüstung verfügen.

TABELLE 1-2. CHECKLISTE FÜR DIE RISIKOBEWERTUNG NACH DEM EINRICHTEN

	Nach dem Einrichten
☐	Ich habe überprüft, dass alle betroffenen Personen den Gefahrenbereich verstehen und sich von ihm fernhalten.
☐	Ich habe alle anderen für meinen Arbeitsbereich spezifischen, potenziellen Risiken bewertet und minimiert.

1.7 IDENTIFIZIERUNG DER KENNZEICHNUNGEN

Die folgenden Warnschilder finden sich auf Ihrem Gerät. Wenn diese unleserlich sind oder fehlen, wenden Sie sich sofort an CLIMAX, um Ersatz zu erhalten.

TABELLE 1-3. IDENTIFIZIERUNG DER KENNZEICHNUNGEN

	P/N 27462 Warnschild Einpunktbearbeitung		P/N 29152 Masseplatte
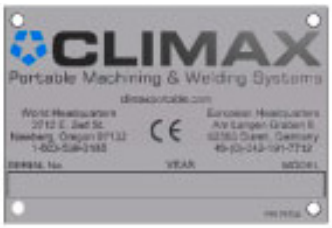	P/N 29154 CLIMAX Seriennummer, Jahr- und Typenschild		
	P/N 35772 Durchflussrichtung Kugelhahn		P/N 35828 Typenschild mit Seriejahr

TABELLE 1-3. IDENTIFIZIERUNG DER KENNZEICHNUNGEN (CONTINUED)

	P/N 46286 Warnschild Quetschgefahr für Rund-fräsmaschine		P/N 46902 Warnung vor heißen Ober-flächen
	P/N 59035 Gebotsschild für Augenschutz		P/N 59037 Gebotss-child für den Gehörschutz
	P/N 59039 Gebotsschild für den Hebep-unkt		P/N 59044 Gebotss-child zum Lesen der Betriebsan-leitung
	P/N 62884 Warnschild zur Schlaggefahr an der Flanschfläche		
			P/N 64156 Kennzeich-nung für das Gegenge-wicht und Armlage

TABELLE 1-3. IDENTIFIZIERUNG DER KENNZEICHNUNGEN (CONTINUED)

	P/N 69422 Informationsschild mit Seriennummer		
	P/N 84019 CLIMAX Logo		
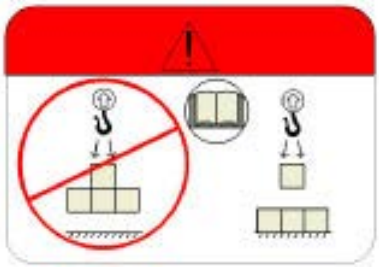	P/N 79385 Warnschild: siehe Betriebsanleitung zu Hebeanweisungen		
	P/N 80510 Warnschild: Verletzungsgefahr für Finger bei rotierendem Schneideblatt	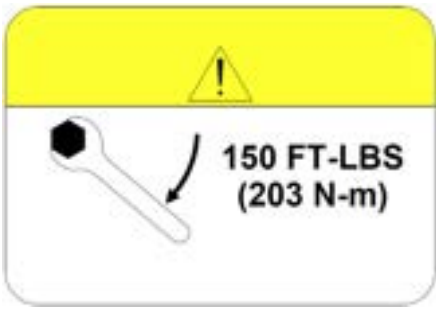	P/N 82157 Drehmoment-Warnschild
	P/N 82163 Warnschild: Quetschung der Hände		P/N 82164 Warnschild: Quetschung des Körpers

TABELLE 1-3. IDENTIFIZIERUNG DER KENNZEICHNUNGEN (CONTINUED)

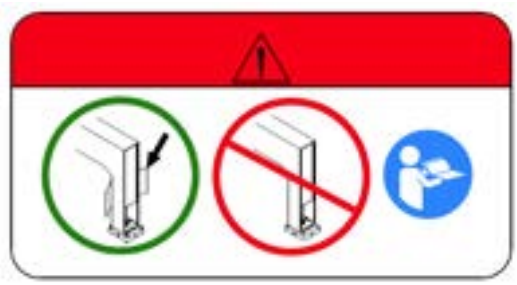	P/N 82172 Warnschild für Platzierung von Schutzeinrichtung bei Außenmontage
	P/N 82195 Verriegelung/Warnschild Elektrik

Zur Identifizierung der Position siehe Einzelteilansicht in Anhang A.

1.8 ERFORDERLICHE, JEDOCH NICHT IM LIEFERUMFANG ENTHALTENE ELEMENTE

- Drehmomentschlüssel
- Waage
- Messuhr
- Stützblöcke
- Schorfplatten (Stahlplatten, die mit dem Flansch oder Steg eines Werkstücks verschraubt, eingespannt oder verschweißt werden, um den festen Sitz einer Werkzeugmaschine am Werkstück zu gewährleisten)

2 ÜBERSICHT

IN DIESEM KAPITEL:

2.1 MERKMALE UND OPTIONEN

Die CM6200 ist eine hochgradig konfigurierbare Maschine mit vielen Optionen und Zubehörteilen. Dieses Betriebsanleitung behandelt die Verwendung und Bedienung mancher dieser Optionen. Die Konfiguration der erworbenen Maschine enthält möglicherweise nicht alle in dieser Betriebsanleitung beschriebenen Optionen und Zubehörteile. Falls eine bestimmte Anwendung zusätzliche Optionen oder Zubehörteile erfordert, wenden Sie sich bitte an einen CLIMAX-Vertriebsmitarbeiter, um Hilfe bei der Beschaffung der benötigten Komponenten zu erhalten.

Die CM6200 wurde für die Durchführung verschiedener Bearbeitungen an einem runden Werkstück, wie beispielsweise einem Flansch, konzipiert. Die Maschine besteht im Wesentlichen aus einem Drehtisch mit Präzisionsrundlager und einem servoelektrischen Antrieb. Ein verstellbarer Fräsarm und ein Gegengewichtsarm sind auf dem Drehtisch montiert, um eine präzise Bearbeitung in jeder Ausrichtung zu ermöglichen. Ein Fräskopf ist auf einem Radialschlitten montiert. Die CM6200 wird entweder über ein Innen- oder ein Außenmontagesystem am Werkstück befestigt.

Die häufigste Anwendung der CM6200 ist für Windturmflanschverbindungen. Sie wird für Flansche mit großem Durchmesser und folgenden Abmessungen verwendet:

- Für Innenmontage, 2.000–4.500 mm (78,9–177,2") Innendurchmesser (siehe Abbildung 2-4 auf Seite 17)
  Der Bearbeitungsbereich der Innenmontage beträgt 2.000–5.004 mm (78,9–197") mit einem Planfräser von 203 mm (8").

- Für Außenmontage, 3.442–5.090 mm (135,5–200,4") Außendurchmesser (siehe Abbildung 2-5 auf Seite 18)
  Der Bearbeitungsbereich der Innenmontage beträgt 1.715–5.004 mm

(67,5–197") mit einem Planfräser von 203 mm (8").

- Für Frontmontage, 1.715 mm (67,5") oder größer (siehe Abbildung 2-5 auf Seite 18)

Die Maschine lässt sich einfach durch Spannbolzen im Inneren der Arbeitsfläche montieren. Die Maschine kann leicht nivelliert und zentriert werden.

Der Fräsarm dreht sich um das Lager, so dass der Fräskopf (oder die optionale Schleifmaschine oder das Einpunktwerkzeug) gleichmäßig schneiden kann.

Für Fräsanwendungen (oder optionales Schleifen) können sowohl Radial- als auch Axialweg manuell per Handrad gesteuert werden. Der Fräskopf kann mit einer optionalen Schwenkplatte um 360° drehen.

2.1.1 Merkmale

Die CM6200 weist folgende Merkmale auf:

Drehzapfenabstand – 635 mm (25") Durchmesser für Dock- und Baukräne.

Starres Drehantriebssystem – Großer Durchmesser und vorgespanntes Lager sorgen für optimale Steifigkeit bei der Bearbeitung.

Einstellbare Dreh- und Gegengewichtsarme – Sowohl der Fräsarm als auch der Gegengewichtsarm können auf den gewünschten Schwenkbereich und den gewünschten Fräsbereich eingestellt werden. Das Gegengewicht wird empfohlen, aber nicht für die horizontale Bearbeitung benötigt.

Einspannprinzip – Rohrförmiges starres Spannsystem mit einer Ebene und verstellbaren Füßen für einfache und schnelle Einrichtung.

Modularer Aufbau – Ermöglicht das Entfernen vieler Maschinenkomponenten zur Erleichterung von Einrichtung und Lagerung.

Touchscreen-Bedienelemente – Die Servo-Option wird komplett mit vollständigen Touchscreen-Bedienelementen geliefert.

2.1.2 Verfügbare Maschinenoptionen

Die CM6200 ist für viele spezifische Bearbeitungsanforderungen konfigurierbar. Die folgenden Optionen sind verfügbar:

Innenhalterung – Diese Maschinenausführung kann an der Innenseite des Werkstücks mit Spannbolzen an der Innenfläche befestigt werden.

Außenhalterung – Diese Maschinenausführung kann mit unserem optionalen Außenhalterungssatz und kundenseitig bereitgestellten Auslegern oder Schorfplatten an der Außenseite des Werkstücks montiert werden.

Innen- und Außenhalterung – Diese Maschinenausführung kann mit einer Kombination aus Innen- und Außenhalterung am Werkstück befestigt werden.

Flanschmontage – Ein Flanschmontagesatz ist erhältlich, der die Montage des Spannfutters direkt am Werkstück oder an einer vom Kunden vorbereiteten Montagevorrichtung ermöglicht.

Einpunktbearbeitung – Bietet die Möglichkeit der Flanschbearbeitung größerer Durchmessern. Diese Option ist mit allen Optionen kompatibel.

Schleifaufsatz – Bietet wesentlich feinere Oberflächeneigenschaften. Diese Option ist mit allen Optionen kompatibel.

Wenden Sie sich an CLIMAX für weitere Informationen zu diesen Merkmalen und Optionen oder wenn eine bestimmte Anwendung zusätzliche Optionen oder Zubehörteile erfordert.

2.1.3 Drehtischgeschwindigkeiten mit Hydraulikmotoren bei der Einpunktbearbeitung

Tabelle 2-1 zeigt die effektiven maximalen Drehzahlen für jeden verfügbaren Hydraulikmotor bei Einpunktbearbeitung (d.h. Flanschbearbeitung).

TABELLE 2-1. DREHTISCHGESCHWINDIGKEITEN BEI EINPUNKTBEARBEITUNG

Motor P/N	Schluckvolumen Hydraulikmotor	Maximale Geschwindigkeit[a] bei 76 lpm (20 gpm)		Maximale Geschwindigkeit[b] bei 38 lpm (10 gpm)	
		60 Hz HPE	*50 Hz HPE*	*60 Hz HPE*	*50 Hz HPE*
46950	195,0 cm^3 (11,9 $Zoll^3$)	32 U/Min.	26 U/Min.	16 U/Min.	13 U/Min.
46375	244,2 cm^3 (14,9 in^3)	25 U/Min.	20 U/Min.	13 U/Min.	10 U/Min.
46549	306,4 cm^3 (18,7 in^3)	20 U/Min.	16 U/Min.	10 U/Min.	8 U/Min.
46550	393,3 cm^3 (24,0 in^3)	16 U/Min.	13 U/Min.	8 U/Min.	6,5 U/Min.
48968	488,3 cm^3 (29,8 in^3)	13 U/Min.	10 U/Min.	6 U/Min.	5 U/Min.

a.Maximale Drehtisch-Drehzahl
b.Maximale Drehtisch-Drehzahl

2.2 MASCHINENKOMPONENTEN

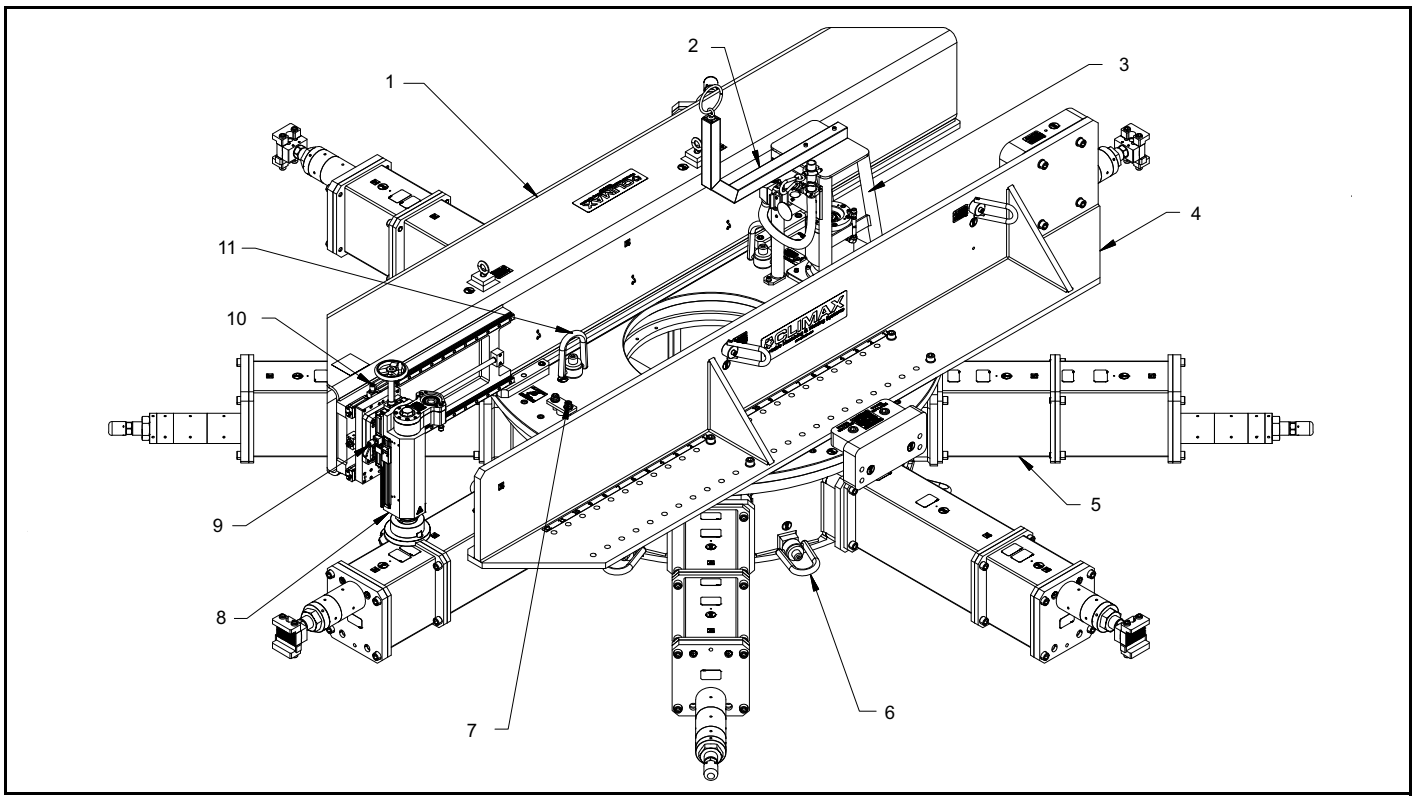

ABBILDUNG 2-1. KOMPONENTEN FÜR DIE INNENMONTAGE

TABELLE 2-2. IDENTIFIKATION FÜR DIE INNENMONTAGE

Nummer	Komponente
1	Fräsarm
2	Schlauchturm
3	Encoder-Schutz
4	Gegengewichtsbaugruppe
5	Spannfutterbaugruppe
6	Heberinge
7	Schleppbremse
8	Fräskopf
9	Axialwegbremse
10	Radialwegbremse
11	Heberinge

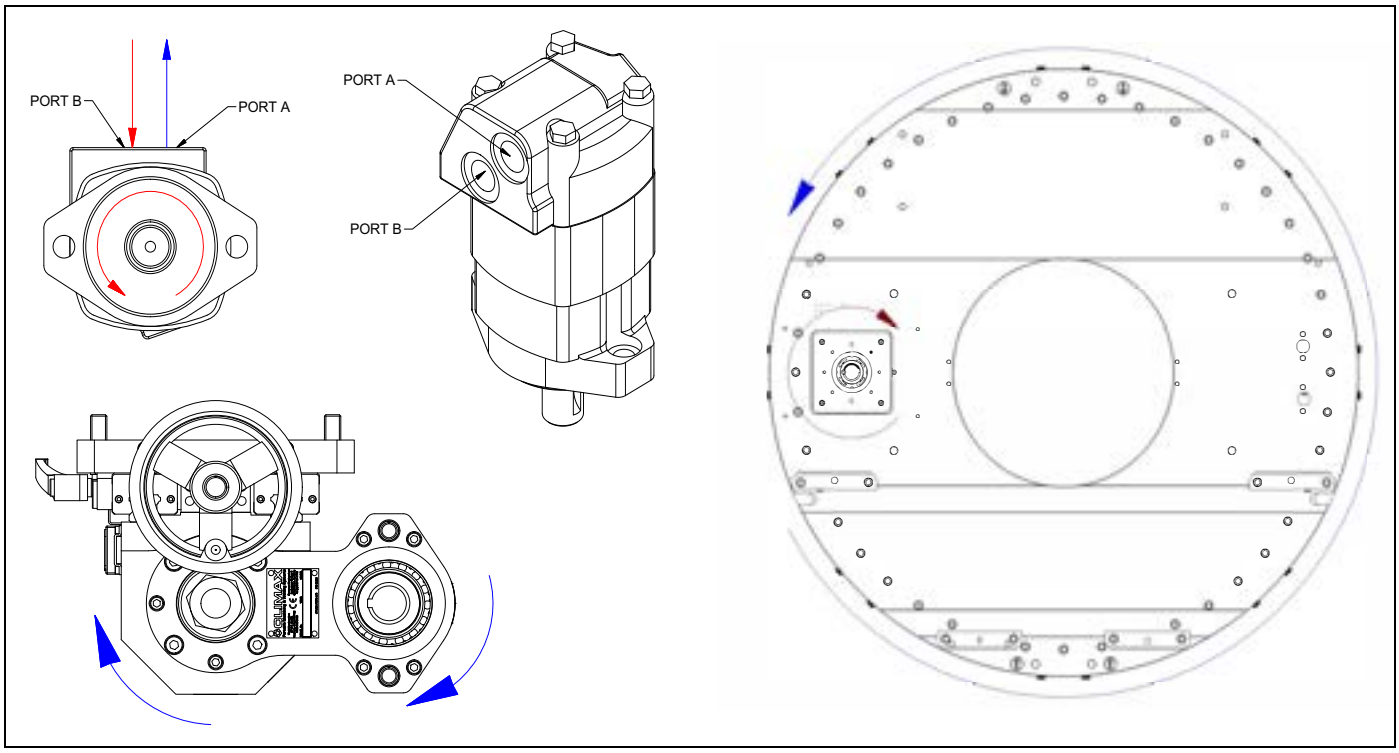

ABBILDUNG 2-2. DREHRICHTUNG VON HYDRAULIKMOTOR, DREHTISCH UND FRÄSKOPF

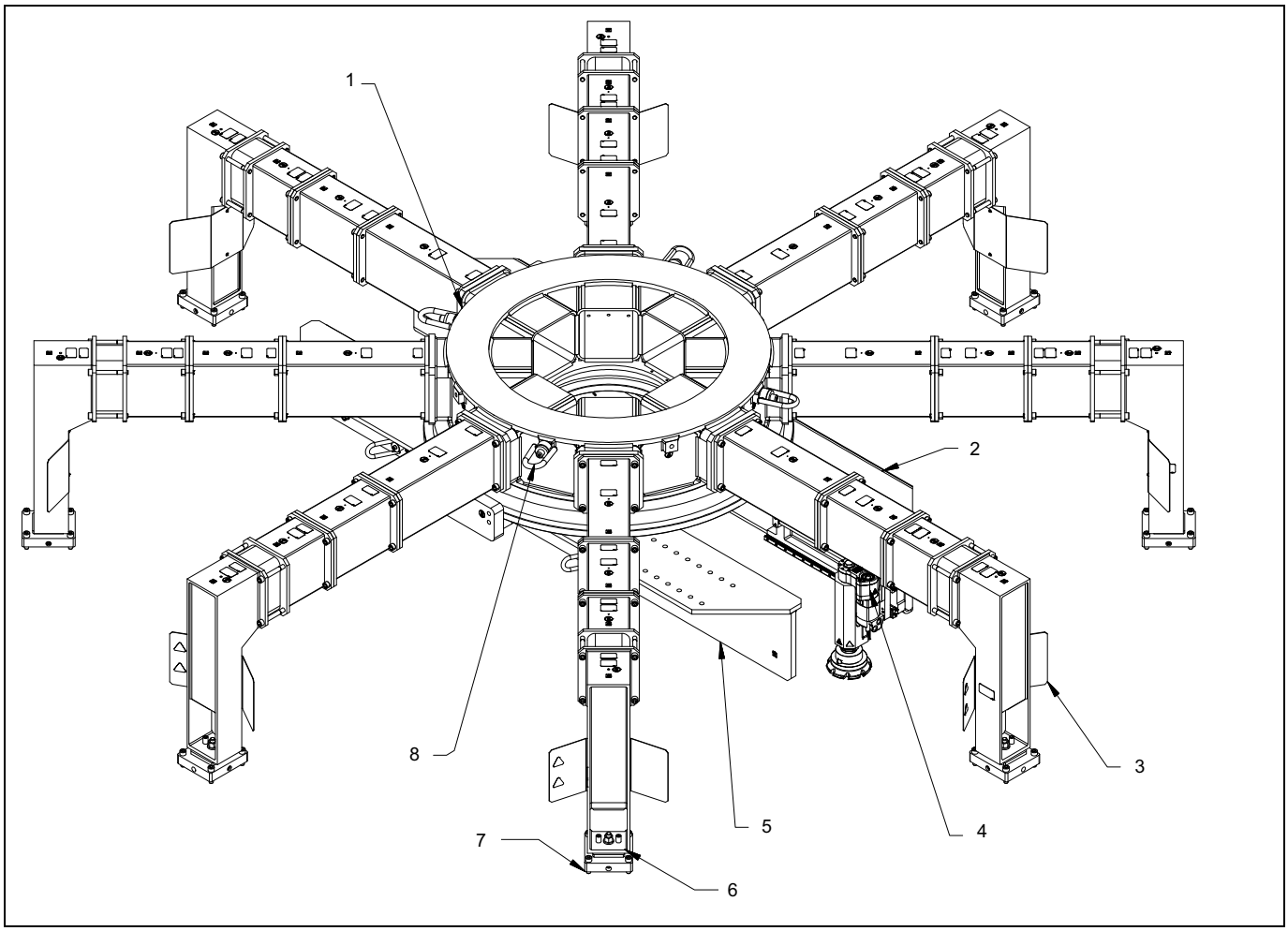

ABBILDUNG 2-3. KOMPONENTEN FÜR DIE AUßENMONTAGE

TABELLE 2-3. IDENTIFIKATION FÜR DIE KOMPONENTEN DER AUßEN-MONTAGE

Nummer	Komponente
1	Spannfutterbaugruppe
2	Fräsarm
3	Schutzschild
4	Fräskopf
5	Gegengewichtsbaugruppe
6	Nivellierplatte
7	Zentrierplatte
8	Heberinge

2.3 MASCHINENUMFANG UND BETRIEBSBEREICH

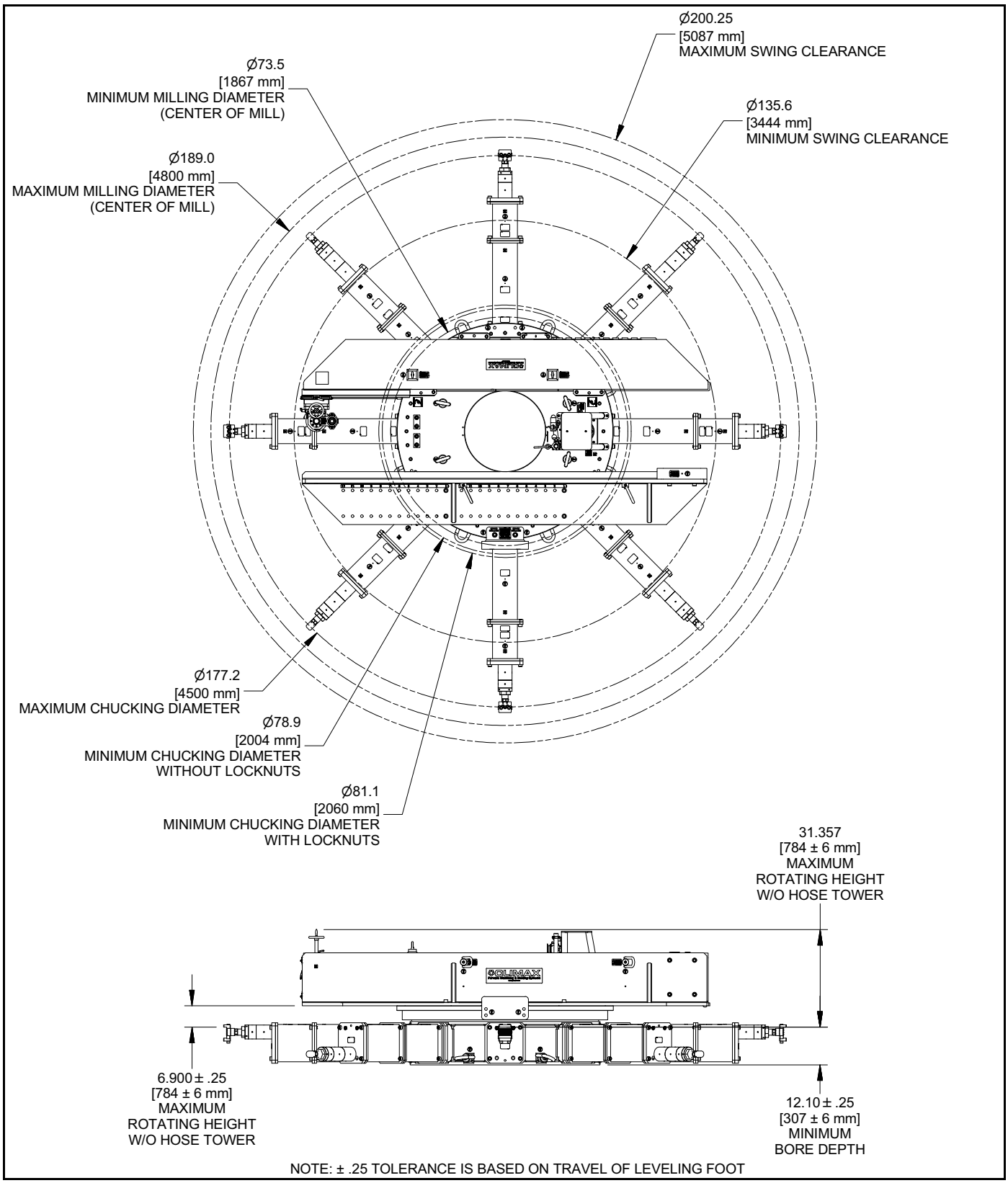

ABBILDUNG 2-4. ABMESSUNGEN INNENMONTAGEMASCHINE

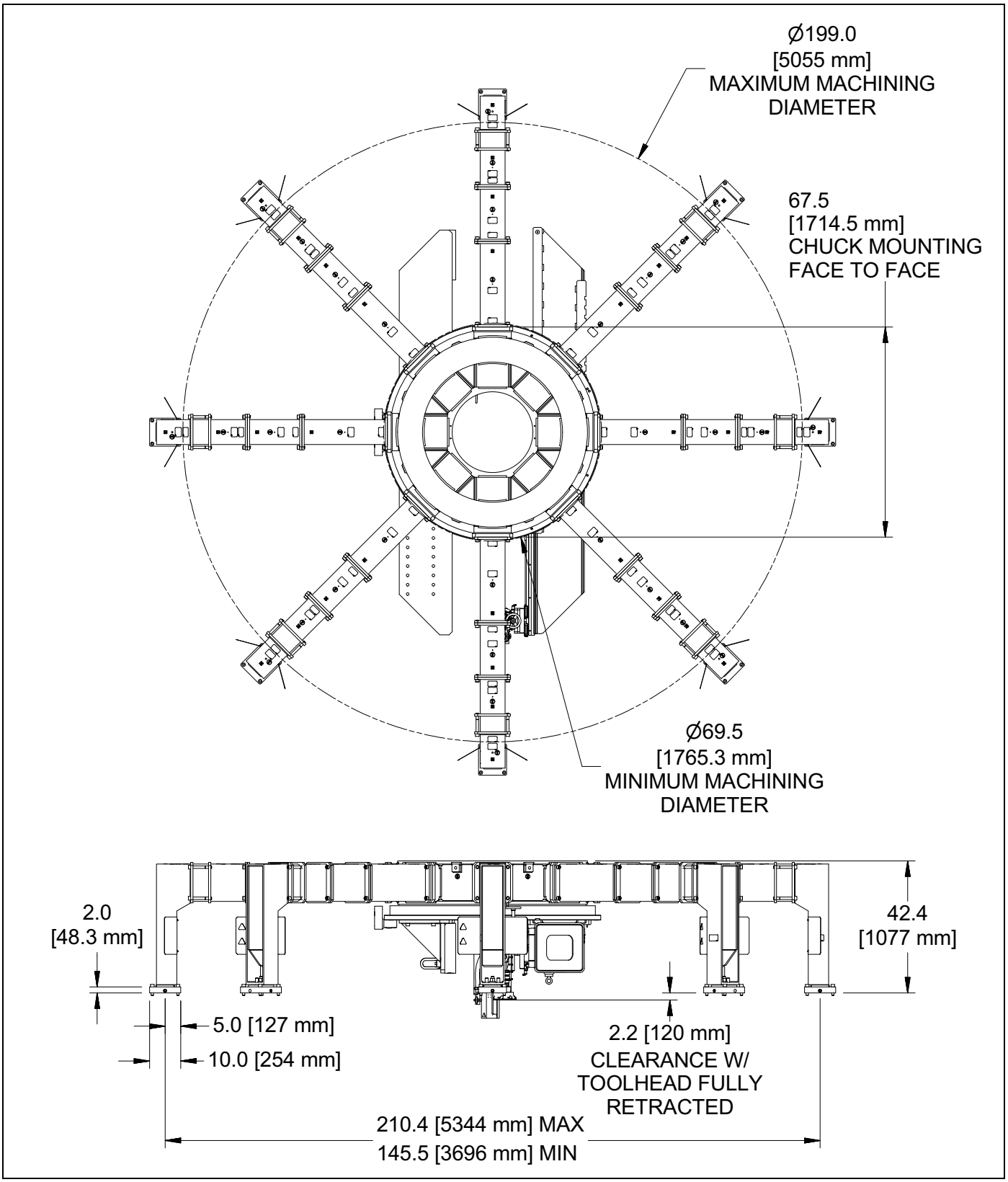

ABBILDUNG 2-5. ABMESSUNGEN AUßENMONTAGEMASCHINE

2.4 TECHNISCHE DATEN

2.4.1 Gewichtsangaben

TABELLE 2-4. BAUGRUPPENGEWICHTE

Baugruppe	Teilenummer	Gewicht
Drehtisch:	62028	1584 kg (3493 Pfd.)
Fräsarm:	72676	594 kg (1310 Pfd.)
Gegengewichtsarm:	62031	721 kg (1590 Pfd.)
12" Innenmontagefußbereich:	62038	32 kg (70,5 Pfd.)
17,5" Innenmontagefußbereich:	62038	41 kg (90,4 Pfd.)
27,5" Innenmontagefußbereich:	62038	50 kg (110 Pfd.)
5" Außenmontagefußbereich:	60755	11,6 kg (25,5 Pfd.)
12,5" Außenmontagefußbereich:	57724	30,2 kg (66,5 Pfd.)
17,5" Außenmontagefußbereich:	57851	36,4 kg (80,3 Pfd.)
27,5" Außenmontagefußbereich:	57852	49,0 kg (108 Pfd.)
Fräskopf:	72277	55 kg (112 Pfd.)

2.4.2 Technische Daten der Hydraulikmotoren

Siehe Abbildung 2-6 auf Seite 20 für die maximalen Drehzahlen, Druckwerte und Durchflussraten der verschiedenen Hydraulikmotoren. Diese Grenzwerte sowie die Grenzwerte der HPE nicht überschreiten.

WARNING

Das Überschreiten der vorgegebenen Parameter des Hydrauliksystems kann zu Fehlfunktionen der Maschine führen, die zu Schäden an der Maschine und zu Verletzungen von Personen führen können.

Specification Data — 2000 Series Motors

Displ. cm³/r [in³/r]		80 [4.9]	90 [5.5]	100 [6.2]	130 [8.0]	160 [9.6]	195 [11.9]	245 14.9]	305 [18.7]	395 [24.0]	490 [29.8]
Max. Speed (RPM) @ Flow	Continuous	908	836	742	576	477	385	308	246	191	153
	Intermittent	908	1042	924	720	713	577	462	365	287	230
Flow l/min [GPM]	Continuous	75 [20]	75 [20]	75 [20]	75 [20]	75 [20]	75 [20]	75 [20]	75 [20]	75 [20]	75 [20]
	Intermittent	75 [20]	95 [25]	95 [25]	95 [25]	115 [30]	115 [30]	115 [30]	115 [30]	115 [30]	115 [30]
Torque* Nm [lb-in]	Continuous	235 [2065]	265 [2326]	295 [2630]	385 [3420]	455 [4040]	540 [4780]	660 [5850]	765 [6750]	775 [6840]	845 [7470]
	Intermittent	345 [3035]	390 [3458]	445 [3950]	560 [4970]	570 [5040]	665 [5890]	820 [7250]	885 [7820]	925 [8170]	930 [8225]
Pressure Δ bar [Δ PSI]	Continuous	205 [3000]	205 [3000]	205 [3000]	205 [3000]	205 [3000]	205 [3000]	205 [3000]	205 [3000]	155 [2250]	120 [1750]
	Intermittent	310 [4500]	310 [4500]	310 [4500]	310 [4500]	260 [3750]	260 [3750]	260 [3750]	260 [3700]	170 [2750]	140 [2000]
	Peak	310 [4500]	310 [4500]	310 [4500]	310 [4500]	310 [4500]	310 [4500]	310 [4500]	310 [4500]	205 [3250]	170 [2500]
Weight kg [lb]	Standard or Wheel Mount	9.3 [20.5]	9.3 [20.5]	9.5 [21.0]	9.8 [21.5]	10.0 [22.0]	10.4 [23.0]	10.9 [24.0]	11.3 [25.0]	11.8 [26.0]	12.2 [27.0]
	Bearingless	7.3 [16.0]	7.3 [16.0]	7.5 [16.5]	7.7 [17.0]	7.9 [17.5]	8.4 [18.5]	8.8 [18.5]	9.3 [20.5]	9.8 [21.5]	10.2 [22.5]

Maximum Case Pressure: See case pressure seal limitation graph.

*See shaft torque ratings for limitations.

ABBILDUNG 2-6. TECHNISCHE DATEN DER HYDRAULIKMOTOREN

Die Temperaturbereiche der Betriebsbedingungen entnehmen Sie bitte dem HPE-Handbuch.

3 EINRICHTUNG

IN DIESEM KAPITEL:

Dieses Kapitel enthält Informationen zur Einrichtung der Maschine CM6200 für Innenmontage, Außenmontage, zur invertierten Montage, Flanschmontage sowie zur Installation des Gegengewichts. Ihre Maschine verfügt möglicherweise nicht über alle beschriebenen Komponenten. Wenden Sie sich an CLIMAX für Schulungen und weitere Bauteile.

3.1 Annahme und Inspektion

Ihr CLIMAX-Produkt wurde vor dem Versand geprüft und getestet und für normale Versandbedingungen verpackt. CLIMAX garantiert nicht den Zustand Ihrer Maschine bei der Anlieferung. Führen Sie bei Erhalt Ihres CLIMAX-Produkts deshalb die folgenden Eingangsprüfungen durch.

1. Die Transportbehälter auf Beschädigungen überprüfen.
2. Überprüfung des Inhalts der Versandbehälter anhand der beiliegenden Rechnung, um sicherzustellen, dass alle Komponenten verschickt wurden.
3. Alle Komponenten auf Beschädigungen prüfen.

4. Stellen Sie die Maschine beim Auspacken auf 102 mm (4") hohe Blöcke, um eine Beschädigung der Komponenten zu vermeiden.
5. Lösungsmittel zur Entfernung eventueller Schutzschichten verwenden.

Die Maschine wird von CLIMAX mit einer schweren LPS3-Beschichtung ausgeliefert. Das empfohlene Lösungsmittel dafür ist LPS PreSolve Orange Degreaser. Für den Maschinenbetrieb kann ein alternatives Langzeit-Korrosionsschutzmittel verwendet werden. Verwenden Sie immer das richtige Lösungsmittel für die aufgetragene Schutzschicht.

Wenden Sie sich umgehend an CLIMAX, um beschädigte oder fehlende Komponenten zu melden.

3.2 Vorbereiten der Maschine auf den Betrieb

3.2.1 Überprüfung vor dem Einrichten

Die CM6200 kann auf vielfältige Weise aufgestellt und montiert werden. Vor Einrichtung der Fräse ist Folgendes zu überprüfen:

- Die Maschinenbaugruppen sind korrekt positioniert.
- Es ist genügend Platz vorhanden, um die gesamte Maschine auf oder in der Nähe des Werkstücks zu positionieren.
- Alle Anschlüsse sind ordnungsgemäß angebracht.

3.2.2 Begutachtung des Arbeitsbereichs

Die CM6200 wird oft an gefährlichen Orten eingesetzt (in erhöhten Positionen, in der Nähe anderer Betriebsmittel, über Kopf, usw.). CLIMAX kann nicht vorhersehen, wo diese Maschine eingesetzt wird; daher ist vom Benutzer für alle Arbeiten vor Arbeitsbeginn eine standortspezifische Risikobewertung (Abschnitt 1.5 auf Seite 4 und Abschnitt 1.6 auf Seite 5) durchzuführen.

Die CM6200 verfügt über Fernbedienfunktionen, mit denen Sie den optimalen Arbeitsort auswählen können (Abschnitt 1.6 auf Seite 5).

⚠ WARNING

Es sind stets sichere Arbeitspraktiken, einschließlich standortspezifischer Sicherheitsanforderungen, zu befolgen. Es liegt in der Verantwortung des Benutzers, bevor die Maschine eingerichtet wird sowie jedes Mal, bevor die Maschine in Betrieb genommen wird, eine Risikobewertung durchzuführen.

3.3 HEBEN UND SICHERUNGEN

DANGER

Die CM6200 kann 4536 kg (10.000 Pfd.) wiegen, wenn sie vollständig in der Innenmontage-Konfiguration montiert ist, und 5456 kg (12.000 Pfd.) in der Außenmontage-Konfiguration. Seien Sie vorsichtig und befolgen Sie alle Sicherungsverfahren vor Ort, wie z.B. einen Hebeplan, der den Aufenthalt unter der Last, usw., ausschließt. Ein Sturz oder unkontrolliertes Schwenken der Maschine kann zu schweren Verletzungen oder zum Tod des Bedienpersonals und der umstehenden Personen führen.

Die CM6200 verfügt über Hebepunkte für einzelne Baugruppen sowie für die komplett montierte Maschine. Die Hebepunkte sind wie in Abbildung 3-1 gekennzeichnet.

ABBILDUNG 3-1. KENNZEICHNUNG ZUR IDENTIFIZIERUNG DER HEBEÖSEN

CAUTION

Heben Sie die Maschine nur an den in Abbildung 3-1 markierten Heberinge an.

Die verschiedenen Baugruppen können demontiert und mithilfe der gekennzeichneten Hebeösen an jeder Baugruppe einzeln gehoben werden.

DANGER

Heben Sie die montierte Maschine nicht an den Hebeösen oder Heberingen am Gegengewicht oder am Fräsarm! Heben Sie die montierte Maschine nur mit den vier in Abbildung 3-2 und Abbildung 3-3 dargestellten Heberingen. Das Heben der montierten Maschine an anderen Hebepunkten kann dazu führen, dass die Maschine von der Takelage herunterfällt. Abstürzende Maschinen können zu schweren und tödlichen Verletzungen führen.

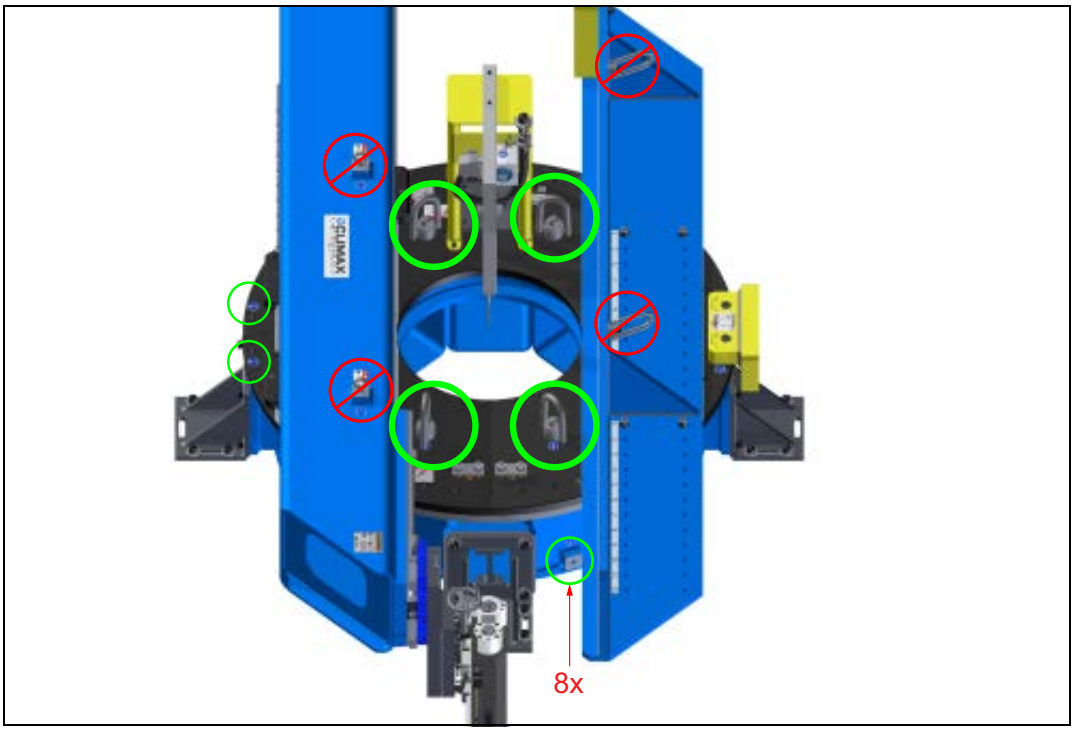

ABBILDUNG 3-2. HEBERINGE ZUM HEBEN DER MONTIERTEN MASCHINE

Auf der Oberseite des Drehtisches befinden sich vier Heberingpositionen (Abbildung 3-2 auf Seite 24) und acht Heberingpositionen um die Seiten der Nabe (eine davon ist in Abbildung 3-3 dargestellt). Sichern Sie je nach Anwendungsorientierung die mitgelieferten Heberinge an den erforderlichen Stellen.

ABBILDUNG 3-3. HEBERINGE ZUM ANHEBEN DER MONTIERTEN MASCHINE IN VERTIKALER POSITION

Achten Sie beim Anheben der Maschine besonders auf die Lage des Schwerpunktes. Achten Sie immer darauf, dass alle Maschinenteile richtig festgezogen sind, um Gefahren zu vermeiden.

Vertikale Sicherung

Die Hebevorrichtung, wie in Abbildung 3-4 dargestellt, ermöglicht es, die Maschine auf gleicher Höhe mit dem Innenmontage-Spannfutter bzw. auf gleicher Höhe mit dem Außenmontage-Spannfutter zu hängen.

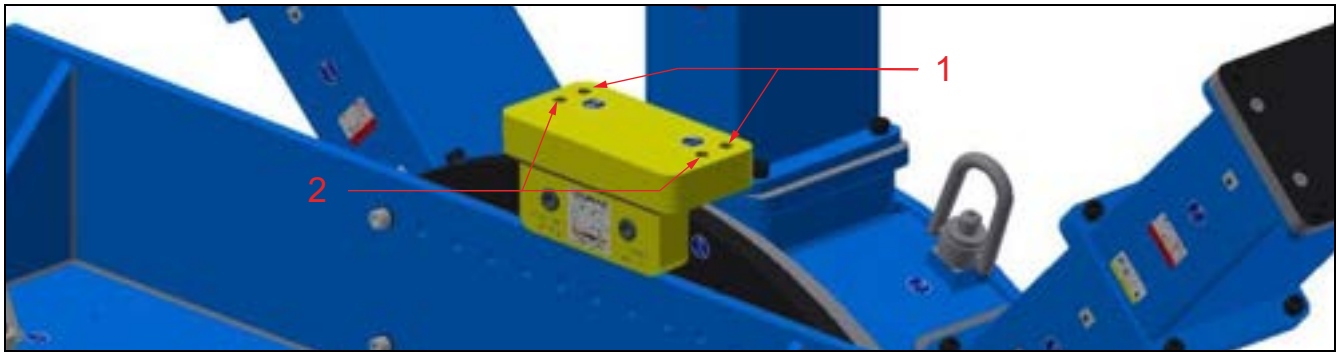

ABBILDUNG 3-4. HEBEVORRICHTUNG AN DER MASCHINE

TABELLE 3-1. IDENTIFIKATION DER HEBEVORRICHTUNG

Nummer	Komponente
1	Position A
2	Position B

Montieren Sie die Hebeösen in Position A für die Innenmontage bzw. in Position B für die Außenmontage.

Beachten Sie, dass nur zwei dieser Bohrungen zum Anheben der Maschine mit montierten Hebeösen erforderlich sind. Die Bohrungen sind im Abstand voneinander angeordnet, um Platz für die Montagefüße zu lassen.

Die Hebevorrichtung sollte mit 310 Nm (230 ft-lbs) festgezogen werden.

3.4 GEFAHREN BEI DER INSTALLATION

Die Installationsphase kann gefährlich sein, da sie von der Einhaltung der Sicherheitsvorkehrungen von Seiten des Bedienpersonals und anderer Personen abhängt. Beachten Sie die folgenden Warnhinweise sorgfältig, bevor Sie den Montageprozess durchführen.

⚠ WARNING

Schwenkende oder herunterfallende Maschinen können Personen, die sich in der Nähe der Maschine befinden, schwer oder tödlich verletzen. Sichern Sie alle Komponenten an der Maschine, bevor Sie sie heben. Schwere Verletzungen bis hin zu Todesfällen können durch unsachgemäße Hebeverfahren entstehen.

⚠ WARNING

Wenn diese Maschine nicht ordnungsgemäß gesichert ist, kann sie herunterfallen und zu tödlichen Verletzungen führen. Seien Sie bei vertikalen Flanschinstallationen besonders vorsichtig.
• Spannfüße sind am Werkstück zu befestigen.
• Nach Möglichkeit sind Spannfinger und Sicherheitsschweißplatten zu verwenden.

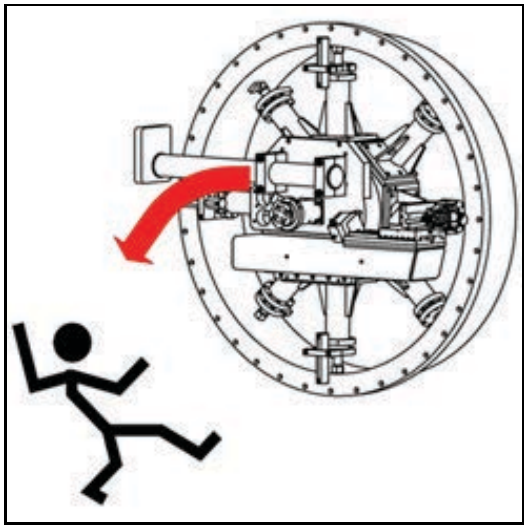

ABBILDUNG 3-5. GEFAHREN BEI DER VERTIKALEN INSTALLATION

Um das Risiko einer herabfallenden Maschine zu vermeiden, sichern Sie die Maschine, indem Sie Sicherheitsblöcke auf die oberen Backen heftschweißen oder an die Unterseite der Nivellierfutterfüße verschraubte Spannvorrichtungen verwenden (Sicherheitsblöcke und Spannvorrichtungen sind nicht im Lieferumfang der Maschine enthalten).

⚠ WARNING

Den Kran erst entfernen, wenn mindestens eine der Sicherungsmethoden vorhanden ist und die Abdrückschrauben der Futterfüße mit 441 Nm (325 ft-lb) festgezogen sind.

NOTICE

Falls der Drehmomentwert ohne akzeptable Werkstückverformung nicht erreicht werden kann, muss das Bedienpersonal eigene sekundäre Stütz- und Rückhaltevorrichtungen einsetzen.

⚠ WARNING

Die Abdrückschrauben der Spannfutterfüße nicht über die Sicherungsnut in der Gewindeschraube hinaus ausziehen. Bei Bedarf zusätzliche Fußteile hinzufügen, um die Länge des freiliegenden Teils der Abdrückschrauben zu minimieren.

3.5 Installation der Maschine auf dem Werkstück

3.5.1 Übersicht über die Einrichtung der Rundfräsmaschine CM6200

Vor der Montage auf dem Werkstück die Maschine überprüfen und eventuell notwendige Wartungsarbeiten durchführen. Die folgenden Schritte geben einen Überblick über die Prozesse, die mit der Einrichtung der CM6200 in der Konfiguration der Innenmontage verbunden sind. Die Einrichtung in der Außenmontage ist in Abschnitt 3.5.3 auf Seite 34 aufgeführt.

Gehen Sie wie folgt vor, um die Maschine am Werkstück zu montieren:

1. Überprüfen, dass die Stromzufuhr unterbrochen ist.
2. Die Oberfläche für die Montage ausmessen und die geeigneten Bauteile für die Bearbeitung wählen. Schorfplatten (nicht im Lieferumfang der Maschine) oder andere Montageflächen je nach Bedarf (Abbildung 3-6) montieren.

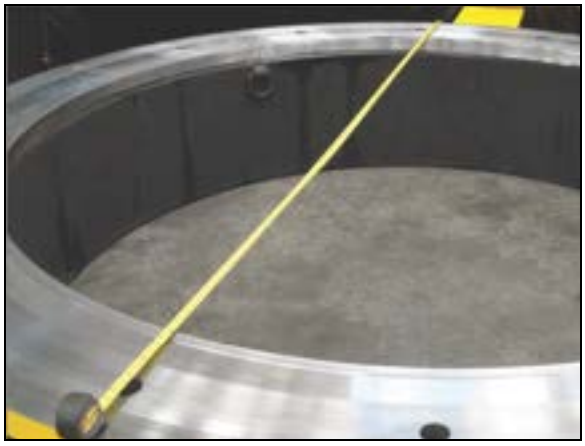

Abbildung 3-6. Werkstück ausmessen

3. Vor dem Einsetzen der Rundfräse in das Werkstück sicherstellen, dass die Füße fest mit der Maschine verbunden sind.
   a) For Innenmontage: Sicherstellen, dass die Innenmontagefüße auf einen Durchmesser eingestellt sind, der kleiner als der innere Montagedurchmesser ist.
   b) Für Außenmontage: Sicherstellen, dass die Außenmontagefüße auf einen Durchmesser eingestellt sind, der größer als der Flanschdurchmesser ist (Abbildung 3-7). Siehe Abschnitt 3.5.2 auf Seite 29 und Abschnitt 3.5.3 auf Seite 34 für das komplette Verfahren

Abbildung 3-7. Fußausmessung

zur Einrichtung der Spannfutterfüße.

NOTICE

Falls die CM6200 in vertikal montiert wird, sollten der Fräsarm und das Gegengewicht am Drehtisch befestigt werden (step 5), bevor die Maschine am Werkstück montiert wird (step 8), was die Möglichkeit einer unbeabsichtigten Rotationsverschiebung während des Montagevorgangs vermindert.

4. Das Gegengewicht und den Fräsarm in gleich weit von der Mitte der Maschine entfernten Positionsschlitzen mit gleicher Positionsnummer bringen, um die Maschine auszutarieren.
5. Den Fräsarm und das Gegengewicht am Drehtisch befestigen. Siehe Abschnitt 3.6 auf Seite 36 und Abschnitt 3.7 auf Seite 40 für die betreffenden Drehmomentwerte.
6. Kranschlingen an den Hebepunkten des Drehtisches befestigen.

⚠ WARNING

Für jeden Hebering jeweils einen individuellen Heberiemen verwenden, und darauf achten, dass die einzelnen Heberiemen von angemessener und gleicher Länge, sowie für das Maschinengewicht und den Winkel des Anschlagmittels ausgelegt sind.

7. Die Maschine langsam und vorsichtig anheben. Wenn die Maschine aus dem Gleichgewicht ist, senken Sie sie auf den Boden ab. Die Anpassungen vornehmen, bevor die Maschine erneut angehoben und manövriert wird.
8. Montieren Sie die Maschine mit Hilfe von Spannfingern am Werkstück (Abbildung 3-8).
9. Eventuell erforderliche Steuerkabel anschließen (abhängig von der Konfiguration).
10. Vor Betrieb der Maschine überprüfen, dass die Maschine zentriert und nivelliert ist.

ABBILDUNG 3-8. SPANNFINGER

Heben von horizontaler in vertikale Position

Wenn die CM6200 von der horizontalen in die vertikale Position gehoben wird, ist sicherzustellen, dass die lastgeprüfte Hebevorrichtung (Abbildung 3-9), wie in

Abschnitt 3.8.3 auf Seite 43 und Abschnitt 3.8.4 auf Seite 44 beschrieben, korrekt an der Maschine installiert ist.

Diese Hebevorrichtung hält die Maschine stabil und senkrecht, was das senkrechte Heben der Maschine sicherer und einfacher gestaltet.

ABBILDUNG 3-9. LASTGEPRÜFTE HEBEVORRICHTUNG P/N 68425

3.5.2 Baugruppe Innenmontagefuß

Die farblich hervorgehobenen Bauteile in Abbildung 3-10 haben 4"-4 Unified Thread Gewinde mit Dreifach-Führung.

Die Nivellierbacken für Spannfutterfüße umfassen Spannvorrichtungen für Innenflansche bis 210 mm (8").

TABELLE 3-2. IDENTIFIZIERUNG VON VERSCHLUSSMUTTER UND NIVELLIERBACKE

Nummer	Komponente
1	Interne Verschlussmutter
2	Nivellierbacke

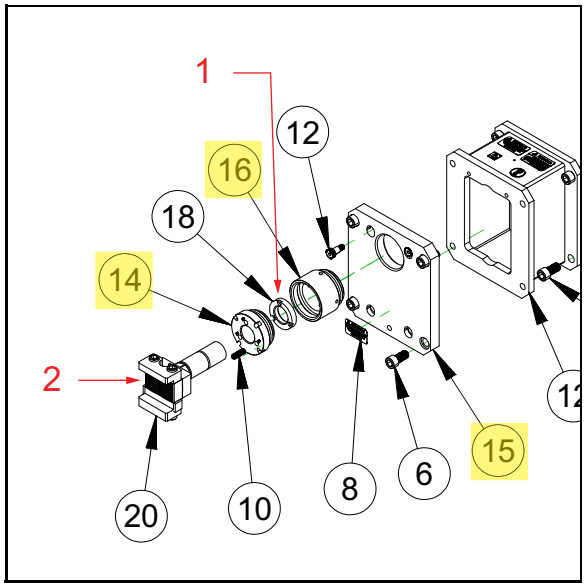

ABBILDUNG 3-10. VERSCHLUSSMUTTER UND NIVELLIERBACKE

Auf der Endkappe sind die Verriegelungssymbole für das Verriegelungssystem der Abdrückschrauben hervorgehobenen (siehe Abbildung 3-11).

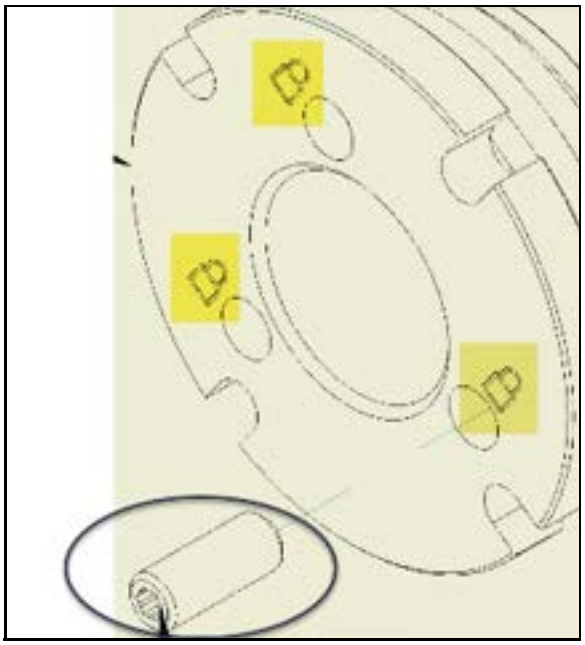

ABBILDUNG 3-11. VERRIEGELUNGSSYMBOLE AUF DER ENDKAPPE

NOTICE

Nach Abschluss der letzten Einstellungen an den Futterfüßen eine der drei Inbusschrauben (P/N 74499 M12 x 40 mm lang) mit 40 Nm (29 ft-lbs) festziehen (siehe Kreis in Abbildung 3-11), um die Abdrückschraube zu sichern. Vor weiteren Einstellungen am Vortrieb, sowie vor dem Entfernen der Maschine vom Flansch, diese Schraube lösen.

NOTICE

Für eine doppelte Ebenen wechseln die Spannfutterfüße um die Nabe herum zwischen hoch und niedrig. Bei einer Ebene werden die Abdrückschrauben in der Regel alle hoch montiert.

⚠ WARNING

Verwenden Sie bei der Montage der Maschine eine zusätzliche Abspannung, wie z.B. Spannfinger, falls die Maschine aus bzw. durch den Spanndurchmesser fallen kann.

Der Drehtisch kann in den Konfigurationen Innenmontage oder in der optionalen Außenmontage eingerichtet werden. Eine Konfiguration mit Innenmontage ermöglicht die Montage innerhalb eines Flansches. Die Konfiguration mit Außenmontage ermöglicht die Befestigung der Maschine an der Außenseite eines Flansches. Siehe Abschnitt 4.5.1 auf Seite 84.

Der Doppelebenenaufbau in der Konfiguration mit Innenmontage verwendet alternierende Füße, sodass die Nivellierfüße höher sind als die Füße ohne Nivelliermöglichkeit. Diese Anordnung kann der Maschine je nach Beschaffenheit des Werkstücks zusätzliche Stabilität verleihen.

NOTICE

Wenn das Werkstück nicht für eine Anordnung mit Doppelebene geeignet ist, sollten andere Verfahren zur Erhöhung der Stabilität der Maschine verwendet werden. Siehe Abschnitt 3.5.3 auf Seite 34 für Befestigungsmethoden.

Gehen Sie wie folgt vor, um die Montagefüße des Drehtisches aufzustellen:

1. Die Werkstückbohrung ausmessen.
2. Geeignete Teile für die Montage auswählen.
3. Wenden Sie Schmiermittel gegen Festfressen (im Werkzeugsatz enthalten) auf die folgenden Stellen an:
   - Die Gewinde und Kontaktflächen der verschiedenen Abschnitte der Spannfutterverlängerungsfüße, wie in Abbildung 3-12 dargestellt.

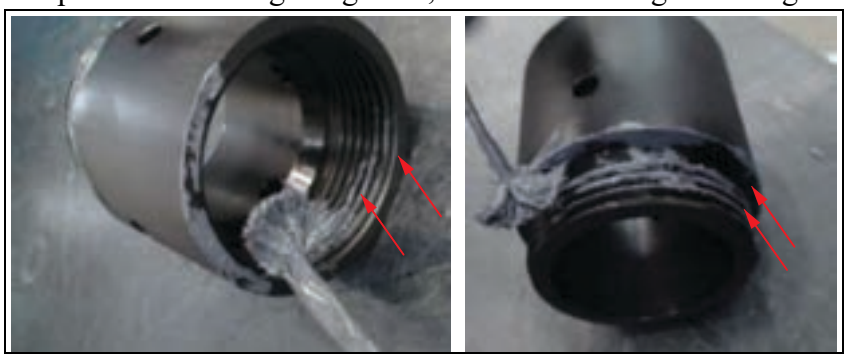

ABBILDUNG 3-12. STELLEN, AN DENEN SCHMIERMITTEL ANZUWENDEN IST

   - Abdrückschraubengewinde, um ein Festfressen des Gewindes zu verhindern (Abbildung 3-13.)

ABBILDUNG 3-13. ABDRÜCKSCHRAUBE

4. Siehe Einzelheitenansichten Abbildung A-7 auf Seite 126, Abbildung A-8 auf Seite 127 und Abbildung A-9 auf Seite 128, Tabelle 3-5 auf Seite 33 und Tabelle 3-6 auf Seite 35 beim Zusammenbau der Futterfüße.
5. Die Spannfutterfüße wechseln um die Nabe herum zwischen hoch und niedrig. Befestigen Sie die Spannfutterarme mit den mitgelieferten Schrauben an der Nabe.

6. Nach Befestigen der Endkappe am Spannfutterverlängerungsfuß die Baugruppen der Nivellierfüße und der Füße ohne Nivelliermöglichkeit montieren. Die Nivellierfüße des Spannfutters müssen an den vier oberen Endkappen der Füße montiert werden. Die Füße des Spannfutters ohne Nivelliermöglichkeit müssen an den vier unteren Endkappen der Füße montiert werden.
7. Befestigen Sie die Spannfutterarme mit den mitgelieferten Schrauben an der Nabe.
8. Nach Befestigen der Endkappe an den Spannfutterverlängerungsfuß die Baugruppen der Nivellierfüße des Spannfutters montieren.

⚠ CAUTION

Die Abdrückschraube muss so eingesetzt werden, dass sich die Sicherungsnut vollständig in der Endkappe befindet.

Die Hubfüße nicht über die Sicherungsnut in der Gewindeschraube hinausragen lassen (Abbildung 3-14), da dies die Abdrückschraube überlasten und zu Schäden an der Schraube führen kann.

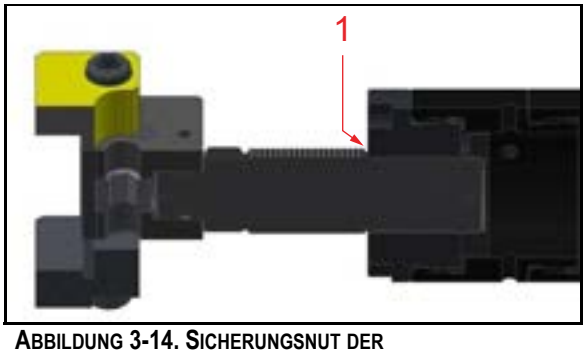

ABBILDUNG 3-14. SICHERUNGSNUT DER ABDRÜCKSCHRAUBE (NIVELLIERFUß)

Bei Bedarf zusätzliche Fußteile hinzufügen, um die Länge des freiliegenden Teils der Abdrückschrauben zu minimieren.

TABELLE 3-3. IDENTIFIKATION DER SICHERUNGSNUT DER ABDRÜCKSCHRAUBE

Nummer	Komponente
1	Sicherungsnut der Abdrückschraube

9. Die Abdrückschrauben gleichmäßig einstellen, bis sie etwa 10 mm (3/8”) kleiner als der Werkstückinnendurchmesser sind.

TABELLE 3-4. IDENTIFIKATION NICHT NIVELLIERENDER HUBFUß

Nummer	Komponente
1	Greiferunterlage
2	Abdrückschraube

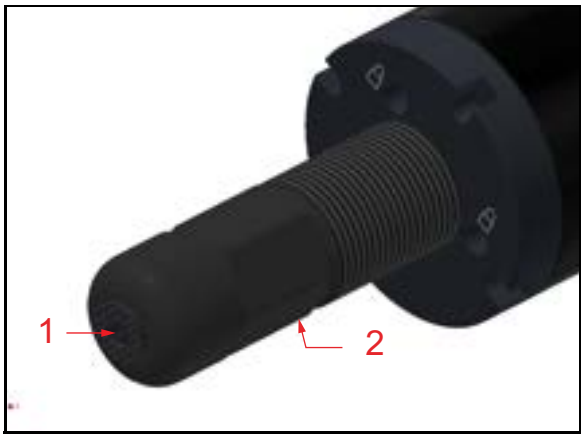

ABBILDUNG 3-15. NICHT NIVELLIERENDER HUBFUß

10. Die Spannfinger auf die Nivellierblöcke montieren. Die Spannfinger so einstellen, dass sie auf dem Werkstückflansch aufliegen.

⚠ CAUTION

Vor Auflegen des Spannfutters auf das Werkstück, überprüfen, dass die Abdrückschrauben etwa gleichmäßig zurückgeschraubt und mit Spannfingern versehen sind.

TABELLE 3-5. SPEZIFIKATIONEN DER SPANNFÜßE FÜR INNENMONTAGE

Bereich	Innendurchmesser des Werkstücks	318 mm (12,5") Abstand	445 mm (17,5") Abstand	699 mm (27,5") Abstand	64 mm (2,5") Fuß	127 mm (5") Fuß
1	2004 mm – 2131 mm (78,9" – 83,9")[a]	0	0	0	0	0
2	2131 mm – 2285 mm (83,9 – 88,9")	0	0	0	1	0
3	2285 mm – 2385 mm (88,9" – 93,9")	0	0	0	0	1
4	2385 mm – 2512 mm (93,9" – 98.9")	0	0	0	1	1
5	2512 mm – 2639 mm (98,9" – 103.9")	0	0	0	0	2[b]
6	2639 mm – 2766 mm (103,9" – 108,9")	1	0	0	0	0
7	2766 mm – 2893 mm (108,9" – 113,9")	1	0	0	1	0
8	2893 mm – 3020 mm (113,9" – 118,9")	0	1	0	0	0

TABELLE 3-5. SPEZIFIKATIONEN DER SPANNFÜßE FÜR INNENMONTAGE

Bereich	Innendurchmesser des Werkstücks	318 mm (12,5") Abstand	445 mm (17,5") Abstand	699 mm (27,5") Abstand	64 mm (2,5") Fuß	127 mm (5") Fuß
9	3020 mm – 3147 mm (118,9" – 123,9")	0	1	0	1	0
10	3147 mm – 3,274 mm (123,9" – 128,9")	0	1	0	0	1
11	3274 mm – 3401 mm (128,9" – 133,9")	0	1	0	1	1
12	3401 mm – 3528 mm (133,9" – 138,9")	0	0	1	0	0
13	3528 mm – 3655 mm (138,9" – 143,9")	1	1	0	0	0
14	3655 mm – 3782 mm (143,9" – 148,9")	1	1	0	1	0
15	3782 mm – 3909 mm (148,9" – 153,9")	1	1	0	0	1
16	3909 mm – 4036 mm (153,9" – 58,9")	1	1	0	1	1
17	4036 mm – 4163 mm (158,9" – 163,9")	1	0	1	0	0
18	4163 mm – 4290 mm (163,9" – 168,9")	1	0	1	1	0
19	4290 mm – 4417 mm (168,9" – 173,9")	1	0	1	0	1
20	4417 mm – 4544 mm (173,9" – 178,9")	1	0	1	1	1
21	4544 mm – 4671 mm (178,9" – 183,9")	0	1	1	0	1

a. Nicht die interne Verschlussmutter verwenden.
b. In der Stückliste befinden sich zwölf 5"-Füße. Wenn zwei 5"-Füße pro Fußbaugruppe benötigt werden (insgesamt also 16x 5"-Füße), schrauben Sie zwei 2,5"-Füße zusammen, um die zusätzlichen vier 5"-Fuß zu erstellen.

3.5.3 Baugruppe Außenmontagefuß

Gehen Sie wie folgt vor, um die Baugruppe Außenmontagefuß zu montieren:

1. Die erforderliche Länge der Außenmontage-Fußabschnitte anhand von Messungen des Außendurchmessers des Werkstücks und der Konfigurationen Außenmontage in Tabelle 3-6 auf Seite 35 feststellen.
2. Die Außenmontage-Halterungen (Abbildung 3-16) gemäß Explosionszeichnung in Abbildung A-10 auf Seite 129 montieren.

ABBILDUNG 3-16. BAUGRUPPE AUßENMONTAGEFUß

3. Die Zentrierplatte an den Enden der einzelnen Außenmontagefüße befestigen (Abbildung 3-17).

NOTICE

In Tabelle 3-6 sind die ersten vier dunkelgrau unterlegten Zeilen wegen der minimalen Armschwinglänge nicht sinnvoll. Siehe Abbildung 3-18 auf Seite 36.

ABBILDUNG 3-17. ZENTRIERPLATTE FÜR AUßENMONTAGE

TABELLE 3-6. EINRICHTTABELLE FÜR AUßENMONTAGESPANNFÜßE

Durchmesser				318 mm (12,5") Abstand	445 mm (17,5") Abstand	699 mm (27,5") Abstand	127 mm (5") Fuß
Bereich	L[a]	B[b]	C[c]				
1	2.350 mm (92,5")	2.600 mm (102,38")	2.804 mm (110,4")	1	0	0	0
2	2.604 mm (102,5")	2.854 mm (112.38")	3.058 mm (120,4")	0	1	0	0
3	2.858 mm (112,5")	3.108 mm (122,38")	3.312 mm (130,4")	0	1	0	1
4	3.112 mm (122,5")	3.362 mm (132,38")	3.566 mm (140,4")	0	0	1	0
5	3.239 mm (127,5")	3.489 mm (137,38")	3.693 mm (145,4")	1	1	0	0
6	3.493 mm (137,5")	3.743 mm (147,38")	3.947 mm (155,4")	1	1	0	1

TABELLE 3-6. EINRICHTTABELLE FÜR AUßENMONTAGESPANNFÜßE (CONTINUED)

Durchmesser				318 mm (12,5") Abstand	445 mm (17,5") Abstand	699 mm (27,5") Abstand	127 mm (5") Fuß
Bereich	L[a]	B[b]	C[c]				
7	3.747 mm (147,5")	3.997 mm (157,38")	4.201 mm (165,4")	1	0	1	0
8	4.001 mm (157,5")	4.251 mm (167,38")	4.455 mm (175,4")	1	0	1	1
9	4.255 mm (167,5")	4.505 mm (177,38")	4.709 mm (185,4")	0	1	1	1
10	4.636 mm (182,5")	4.886 mm (192,38")	5.090 mm (200,4")	1	1	1	0
11	4.890 mm (192,5")	5.140 mm (202,38")	5.344 mm (210,4")	1	1	1	1

a. A wird von Montagefläche zu Montagefläche der senkrechten Stützen gemessen.
b. B ist der Schwenkbereich innerhalb der senkrechten Stützen für den Fräsarm.
c. C wird von der Mitte der Montageplatte bis zur Mitte der Montageplatte gemessen.

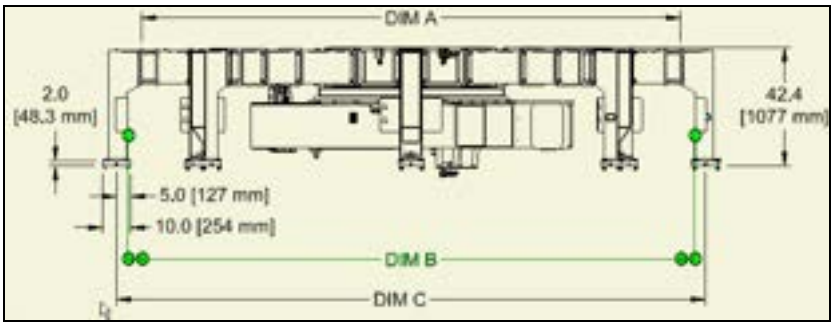

ABBILDUNG 3-18. ABMESSUNGEN DES ÄUßEREN SPANNFUSSES

3.6 MONTAGE DES FRÄSARMS

3.6.1 Montage des Fräsarms auf den Drehtisch

Nachdem die Spannfutterfüße richtig konfiguriert und auf der Futternabe montiert sind, sollte der Fräsarm auf die Maschine montiert werden.

NOTICE

Wenn die Maschine in vertikal montiert werden soll, ist dieser Schritt vor der Montage der Maschine abzuschließen.

Der Fräsarm kann nach der Montage des Spannfutters am Werkstück in horizontaler Ausrichtung montiert werden, aber der Fräsarm sollte zuerst montiert werden.

Der Fräsarm der CM6200 wird mit Spannvorrichtungen am Drehtisch befestigt. Zwei der Spannvorrichtungen (die der Bohrung in der Tischmitte am nächsten liegen) werden direkt an der CM6200-Drehtischplatte befestigt und müssen nicht entfernt werden.

Gehen Sie wie folgt vor, um den Fräsarms auf den Drehtisch zu montieren:

1. Zum Heben zwei der auf dem Fräsarm montierten Hebeösen verwenden und den Fräsarm waagrecht und niedrig halten.
2. Positionieren Sie den Fräsarm gegen die beiden festen Spannbacken.

NOTICE

Die dem Fräskopf gegenüberliegende Montagefläche des Fräsarms weist Einkerbungen auf, um die Arretierung durch die Sicherheitsspannvorrichtung zu ermöglichen. Sicherstellen, dass die Kerben gegen den Sicherungsstift in der Spannvorrichtung passen.

3. Die beiden verbleibenden Spannvorrichtungen montieren und die 5/8-Zylinderschrauben zur Befestigung der Spannvorrichtungen einschrauben.

⚠ WARNING

Die Spannvorrichtungsschrauben mit 150 Nm (110 ft-lb) anziehen, um unerwartete Bewegungen zu vermeiden, die zu schweren und tödlichen Verletzungen führen können.

TIP:

Es ist nicht notwendig, den Wahlstift nach der Dreharmverstellung in eine Kerbe einrasten zu lassen. Dieser ist dazu vorgesehen, den maximalen Hub des Dreharms zu begrenzen, falls sich der Dreharm während des Betriebs löst.

⚠ WARNING

Den Sicherheitsanschlagstift nicht deaktivieren. Der Sicherheitsanschlagstift soll ein unerwünschtes Verschieben des Fräsarms verhindern, was zu schweren und tödlichen Verletzungen führen kann.

3.6.2 Korrektur der Fräsarmposition

Der Fräsarm ist stufenlos verstellbar, um vielseitig positioniert zu werden und Hindernisse zu umgehen.

Gehen Sie wie folgt vor, um die Fräsarmposition zu verändern:

1. Die Schrauben der vier Spannvorrichtungen lösen.

2. Den Sicherheitsanschlagstift offen halten (Abbildung 3-19).
3. Den Arm nun in die gewünschte Position bringen.
4. Den Sicherheitsanschlagstift lösen.
5. Die Spannvorrichtungen wieder anziehen.

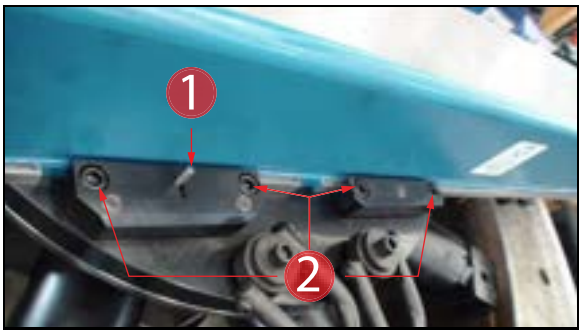

ABBILDUNG 3-19. SPANNVORRICHTUNGSSCHRAUBEN UND ANSCHLAGSTIFT

TABELLE 3-7. IDENTIFIKATION SPANNVORRICHTUNGSSCHRAUBEN UND ANSCHLAGSTIFT

Nummer	Komponente
1	Anschlagstift
2	Spannvorrichtungsschrauben

⚠ CAUTION

Nach dem Einstellen des Fräsarms ist darauf zu achten, dass das Gegengewicht auf die entsprechende Schraubenposition eingestellt ist. Für präzises Fräsen und um Schäden an der Maschine zu vermeiden, sollten das Gegengewicht und der Fräsarm immer im gleichen Abstand zur Mitte der Maschine stehen.

Das Gegengewicht und der Fräsarm haben nummerierte Einstellpositionen entlang der Montageflächen. Jeder nummerierte Schlitz im Fräsarm entspricht einer nummerierten Schraubenposition am Gegengewichtsarm. Stellen Sie sicher, dass Sie das Gegengewicht je einen Schraubenabstand für jede Nut bewegen, die Sie den Fräsarm bewegen.

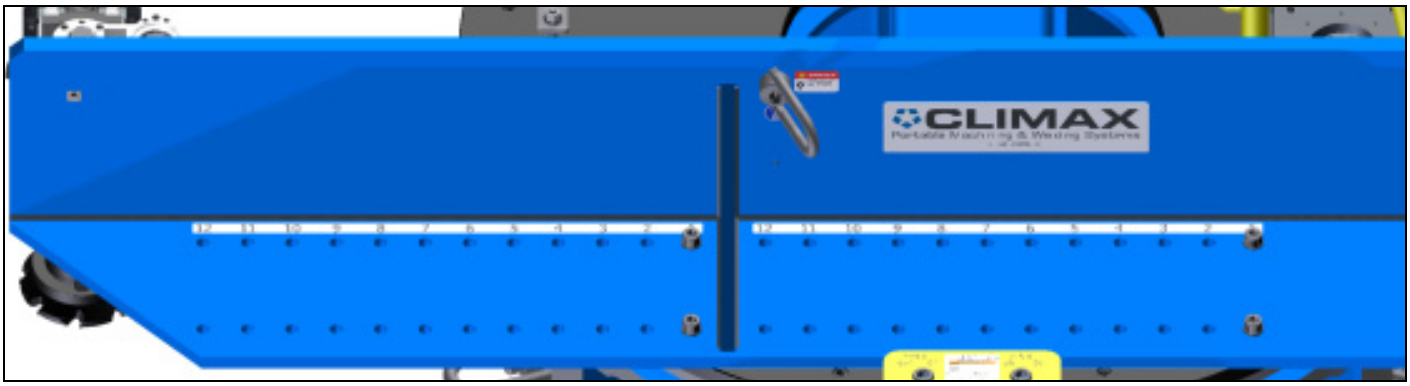

ABBILDUNG 3-20. GEGENGEWICHT

ABBILDUNG 3-21. FRÄSARM

Der Fräskopf hat einen Hub von 609,6 mm (24") entlang des Fräsarms.

Um die Maschine auf einen Fräsbereich einzustellen, verwenden Sie das Minimum und Maximum der Fläche, um die Einstellungen, wie in Tabelle 3-8 dargestellt, für den Fräsarm und das Gegengewicht zu kontrollieren.

TABELLE 3-8. POSITION VON FRÄSARM UND GEGENGEWICHT

Position	Oberflächenbereich in mm (Zoll)
1	3124,2 mm – 1866,9 mm (123" – 73,5")
2	3276,6 mm – 2019,3 mm (129" – 79,5")
3	3429,0 mm – 2171,7 mm (135" – 85,5")
4	3581,4 mm – 2324,1 mm (141 – 91,5")
5	3733,8 mm – 2476,5 mm (147" – 97,5")
6	3886,2 mm – 2628,9 mm (153" – 103,5")
7	4038,6 mm – 2781,3 mm (159" – 109,5")
8	4191,0 mm – 2933,7 mm (165" – 115,5")
9	4343,4 mm – 3073,4 mm (171" – 121,5")
10	4495,8 mm – 3238,5 mm (177" – 127,5")
11	4648,2 mm – 3390,9 mm (183" – 133,5")
12	4800,6 mm – 3797,3 mm (189" – 149,5")

3.6.3 Einrichtung für Fräsen, Schleifen und Einpunktbearbeitung

Siehe Abschnitt 4.4 auf Seite 81 für die Schleifkonfiguration.

Siehe Abschnitt 4.5 auf Seite 82 für die Einzelpunktkonfiguration.

Zum Fräsen wird der Fräskopf mit einer Adapterplatte an die CM6200 befestigt.

Vorgebohrte Schraublöcher in der Adapterplatte ermöglichen die Montage der Fräskopfbaugruppe in 180°-Schritten.

Vor Anheben der Fräskopfbaugruppe ist zu bestimmen, welche Ausrichtung für die Bearbeitung erforderlich ist.

Gehen Sie wie folgt vor, um den Fräskopf zu installieren:

1. Die Adapterplatte an ihren Platz heben und ausrichten.
2. Montieren Sie den Adapter am Radialschlitten und schrauben Sie ihn fest.
3. Fräskopfplatte auf Passstifte in der Adapterplatte ausrichten.
4. Alle Werkzeuge und Hebe- oder Abspannvorrichtungen entfernen.
5. Überprüfen, dass alle Befestigungselemente ordnungsgemäß festgezogen sind.

ABBILDUNG 3-22. INSTALLIERTER FRÄSKOPF

3.7 POSITIONIERUNG DES GEGENGEWICHTS

Nachdem die Spannfutterbeine richtig konfiguriert und auf der Spannfutternabe montiert sind, ist das Gegengewicht an der Maschine zu montieren.

NOTICE

Das Gegengewicht muss installiert werden, wenn die Maschine in einer vertikalen Bearbeitungsanwendung eingesetzt wird. CLIMAX empfiehlt, auch bei allen anderen Anwendungen das Gegengewicht zu verwenden, da es die Leistung der Maschine verbessert und für eine flachere Oberflächenbearbeitung sorgt.

Der Fräsarm kann nach der Montage des Spannfutters am Werkstück in horizontaler Ausrichtung montiert werden, aber der Fräsarm sollte zuerst montiert werden.

Das Gegengewicht dient dazu, den Servoantriebsmotor zu entlasten und das Antriebssystem vor übermäßiger Belastung zu schützen. Das Gegengewicht sorgt auch für Stabilität der Maschine, was zu geringeren Abweichungen bei der Bearbeitung führt.

Das Gegengewicht ist unterschiedlich einstellbar und kann durch radiales Verschieben zur nächsten Schraubenlochposition positioniert werden (Abbildung 3-23). Befolgen Sie die Parameter in Tabelle 3-8 auf Seite 39, um den Fräsarm und das Gegengewicht in der erforderlichen Position für den richtigen Bereich der Bearbeitung zu positionieren.

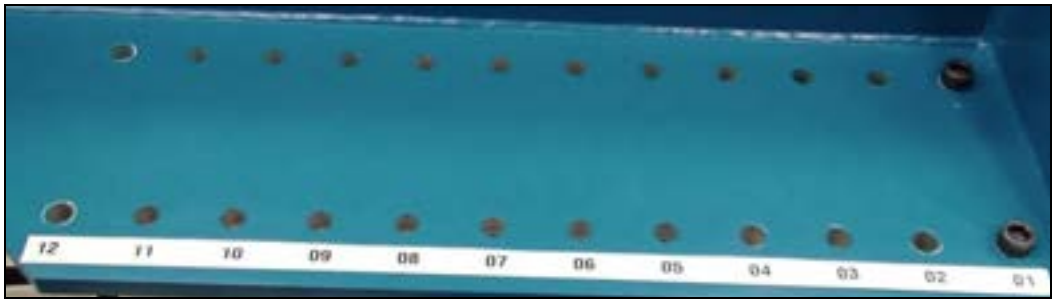

ABBILDUNG 3-23. SCHRAUBENLOCHPOSITIONEN FÜR DAS GEGENGEWICHT

⚠ WARNING

Die Befestigungsschrauben des Gegengewichtsarms mit 150 Nm (110 ft-lb) festziehen, um unerwartete Bewegungen zu vermeiden, die zu schweren und tödlichen Verletzungen führen können.

Überprüfen, dass alle Montageteile sicher sind. Ein loses Gegengewicht kann während des Betriebs herunterfallen und Bedienpersonal und umstehende Personen schwer verletzen.

Gehen Sie wie folgt vor, um das Gegengewicht zu montieren:

1. Positionieren Sie das Gegengewicht an der für die Bearbeitung erforderlichen Stelle.
2. Das Gegengewicht fest verschrauben (Abbildung 3-24).

⚠ CAUTION

Für präzises Fräsen und um Schäden an der Maschine zu vermeiden, sollten das Gegengewicht und der Fräsarm immer im gleichen Abstand zur Mitte der Maschine stehen. Die Positionsnummerierungen sollten übereinstimmen.

ABBILDUNG 3-24. GEGENGEWICHT UND FRÄSARM AUF DEM DREHTISCH

3.8 MONTAGE DER MASCHINE AN DAS WERKSTÜCK

Sobald die Futterfüße richtig konfiguriert und am Spannfutter befestigt sind, ist die Maschine bereit für die Montage am Werkstück.

Siehe Abschnitt 3.4 auf Seite 25 für eine vollständige Liste der Gefahren bei der Installation.

3.8.1 Horizontale Innenmontage der Maschine

Gehen Sie wie folgt vor, um die Maschine an einem horizontalen Flansch in Innenmontage zu befestigen:

1. Die Füße des Innenmontage-Spannfutters auf ein Maß einstellen, das für jeden Fuß 0,25 mm (0,01") weniger beträgt als das Maß des Innendurchmessers des Werkstücks.
2. Den Fräsarm (siehe Abschnitt 3.6 auf Seite 36) und den Gegengewichtsarm (siehe Abschnitt 3.7 auf Seite 40) vor dem Anheben (siehe Abschnitt 3.3 auf Seite 23) der Maschine in die geforderte Stellung bringen.
3. Die Maschine mithilfe der vier Hubringe an der oberen Nabe (wie in Abbildung 3-2 auf Seite 24 dargestellt) in den Innendurchmesser des Werkstücks heben.
4. Die Spannfutterfüße in den Positionen 6:00, 9:00, 12:00 und 3:00 ausfahren, um die Maschine in Position zu halten.
5. Die Maschine auf dem Flansch wie in Abschnitt 3.9 auf Seite 49 beschrieben zentrieren und ausrichten.

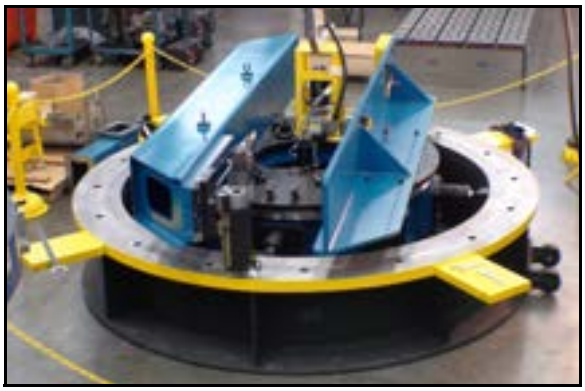

ABBILDUNG 3-25. HORIZONTAL EINGEBAUTE MASCHINE

3.8.2 Horizontale Außenmontage der Maschine

Gehen Sie wie folgt vor, um die Maschine an einem horizontalen Flansch in Außenmontage zu befestigen:

1. Den Fräsarm (siehe Abschnitt 3.6 auf Seite 36) und den Gegengewichtsarm (siehe Abschnitt 3.7 auf Seite 40) vor dem Anheben (siehe Abschnitt 3.3 auf Seite 23) der Maschine in die geforderte Stellung bringen.
2. Die Maschine über den Flansch anhand der vier angegebenen Hebepunkte anheben (siehe Abbildung 3-2 auf Seite 24).

3. Die Maschine auf dem Flansch wie in Abschnitt 3.9 auf Seite 49 beschrieben zentrieren und ausrichten.
4. Die Mutter (in der Mitte von Abbildung 3-26 dargestellt) mit 310 Nm (230 ft-lbs) anziehen.

TABELLE 3-9. IDENTIFIKATION DER ZENTRIERPLATTE FÜR AUßENMONTAGE

Nummer	Komponente
1	Festziehen
2	Nivellieren
3	Zentrieren

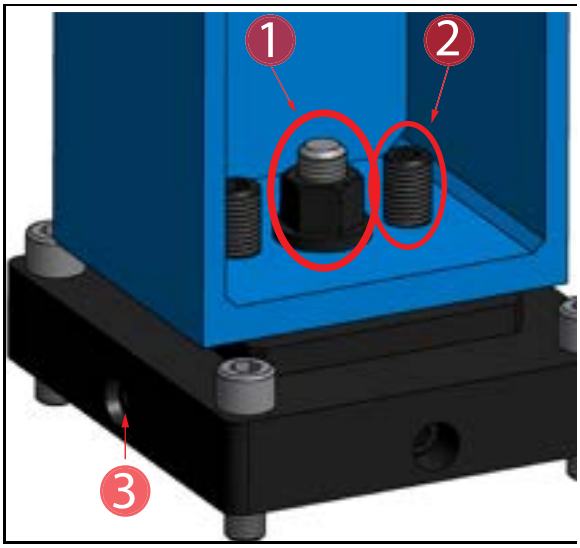

ABBILDUNG 3-26. EINSTELLUNGEN DER ZENTRIERPLATTE FÜR AUßENMONTAGE

3.8.3 Vertikale Innenmontage der Maschine

Sicherstellen, dass die Hebevorrichtung (P/N 68425 in Abbildung 3-9 auf Seite 29) ordnungsgemäß an der Maschine installiert ist, wenn Sie die CM6200 in vertikaler Position montieren. Diese Hebevorrichtung trägt dazu bei, die Maschine stabil und senkrecht zu halten, was die senkrechte Aufstellung der Maschine sicherer und einfacher macht.

Gehen Sie wie folgt vor, um die Maschine an einem vertikalen Flansch in Innenmontage zu befestigen:

1. Die Füße des Innenmontage-Spannfutters auf ein Maß einstellen, das für jeden Fuß 0,254 mm (0,01") weniger beträgt als das Maß des Innendurchmessers des Werkstücks.
2. Den Fräsarm (siehe Abschnitt 3.6 auf Seite 36) und den Gegengewichtsarm (siehe Abschnitt 3.7 auf Seite 40) vor dem Anheben (siehe Abschnitt 3.3 auf Seite 23) der Maschine in die geforderte Stellung bringen.

⚠ WARNING

Alle beweglichen Teile sichern, damit sie nicht bis zum Anschlag schwenken können.

3. Die Hebevorrichtung (P/N 68425 in Abbildung 3-9) anbringen und mit 310 Nm (230 ft-lbs) anziehen.

4. Die Maschine mit der Hebevorrichtung in den Innendurchmesser des Flansches heben, bis die Spannfinger am Flansch anliegen.
5. Die Spannfutterfüße in den Positionen 6:00, 9:00, 12:00 und 3:00 ausfahren, um die Maschine in Position zu halten.
6. Zusätzlich zu den Verriegelungsfüßen eine zweite Befestigungsart verwenden. Siehe Abschnitt 3.5.3 auf Seite 34 für Befestigungsmöglichkeiten für die Innenmontage.

DANGER

Entweder die Schweißplatte oder die Flanschspannvorrichtung muss zur Befestigung der CM6200 im Werkstück **zusätzlich zur** Verriegelung der Hubfüße verwendet werden. Eine unzureichende Sicherung der Maschine kann dazu führen, dass die Maschine vom Werkstück herunterfällt und schwere oder tödliche Verletzungen verursacht.

7. Alle Werkzeuge vom Werkstück und der Maschine entfernen.
8. Die Maschine auf dem Flansch wie in Abschnitt 3.9 auf Seite 49 beschrieben zentrieren und ausrichten.

3.8.4 Vertikale Außenmontage der Maschine

Sicherstellen, dass die Hebevorrichtung (P/N 68425 in Abbildung 3-9) ordnungsgemäß an der Maschine installiert ist, wenn Sie die CM6200 in vertikaler Position montieren. Diese Hebevorrichtung trägt dazu bei, die Maschine stabil und senkrecht zu halten, was die senkrechte Aufstellung der Maschine sicherer und einfacher macht.

Gehen Sie wie folgt vor, um die Maschine an einem vertikalen Flansch in Außenmontage zu befestigen:

1. Den Fräsarm (siehe Abschnitt 3.6 auf Seite 36) und den Gegengewichtsarm (siehe Abschnitt 3.7 auf Seite 40) vor dem Anheben (siehe Abschnitt 3.3 auf Seite 23) der Maschine in die geforderte Stellung bringen.

WARNING

Alle beweglichen Teile sichern, damit sie nicht bis zum Anschlag schwenken können.

2. Die Hebevorrichtung (P/N 68425 in Abbildung 3-9) anbringen und mit 310 Nm (230 ft-lbs) anziehen.
3. Die Maschine mit der Hebevorrichtung über den Flansch heben, bis die Spannfinger am Flansch anliegen.

4. Den Außenmontagefuß sicher an Schorfplatten (nicht im Lieferumfang der Maschine) oder einer anderen geeigneten Montagevorrichtung befestigen (siehe Abschnitt 3.8 auf Seite 42).

DANGER

Eine unzureichende Sicherung der Maschine kann dazu führen, dass die Maschine vom Werkstück herunterfällt und schwere oder tödliche Verletzungen verursacht.

5. Alle Werkzeuge vom Werkstück und der Maschine entfernen.
6. Die Maschine auf dem Flansch wie in Abschnitt 3.9 auf Seite 49 beschrieben zentrieren und ausrichten.
7. Die Mutter (in der Mitte von Abbildung 3-26 auf Seite 43 dargestellt) mit 310 Nm (230 ft-lbs) anziehen.

3.8.5 Invertierte Montage

Die CM6200 kann auch über Kopf auf dem Werkstück montiert werden. Der Fräsarm und das Gegengewicht befinden sich in diesem Fall unterhalb des Spannfutters, im Gegensatz zu oberhalb des Spannfutters in der horizontalen Position. Bei der Montage der invertierten Innenmontage-Halterung ist das Verfahren der horizontalen Innenmontage zu befolgen. Beim Drehen der Maschine äußerst vorsichtig vorgehen.

DANGER

Schwingende oder herunterfallende Maschinenteile können Personen in der Nähe schwer oder tödlich verletzen. Vor dem Anheben der Maschine alle Komponenten an der Maschine sichern, und verhindern, dass sich der Drehtisch drehen kann. Schwere Verletzungen bis hin zu Todesfällen können durch unsachgemäße Hebeverfahren entstehen.

Siehe Abschnitt 3.3 auf Seite 23 für Anweisungen zum Heben der Anlage, wobei besonders auf Abbildung 3-2 auf Seite 24 und die Verwendung der Hebevorrichtung nach Abbildung 3-4 auf Seite 25 zu achten ist.

DANGER

Entweder die Schweißplatte oder die Flanschspannvorrichtung muss zur Befestigung der CM6200 im Werkstück **zusätzlich zur** Verriegelung der Hubfüße verwendet werden. Eine unzureichende Sicherung der Maschine kann dazu führen, dass die Maschine vom Werkstück herunterfällt und schwere oder tödliche Verletzungen verursacht.

TIP:

Die bevorzugte Methode zum Invertieren der Maschine erfolgt mit zwei Kränen.

Gehen Sie zur invertierten Montage wie folgt vor:

1. Ggf. Spannfüße oder Flanschmontagesatz entfernen (Abbildung 3-27).

ABBILDUNG 3-27. ANLAGE VOR DER INVERSION

2. Legen Sie ein Stück Sperrholz neben der Maschine bereit, auf dem die Maschine nach dem Heben abgesetzt werden kann (Abbildung 3-28).
3. Die Hebezeuggurte an vier Hebeösen am Spannfuttergehäuse (je zwei an gegenüberliegenden Seiten) wie in Abbildung 3-28 dargestellt befestigen.
4. Die Maschine heben und langsam in die vertikale Lage bringen (siehe Abbildung 3-29).

ABBILDUNG 3-28. SPERRHOLZ UND RIEMEN FÜR DIE INVERSION

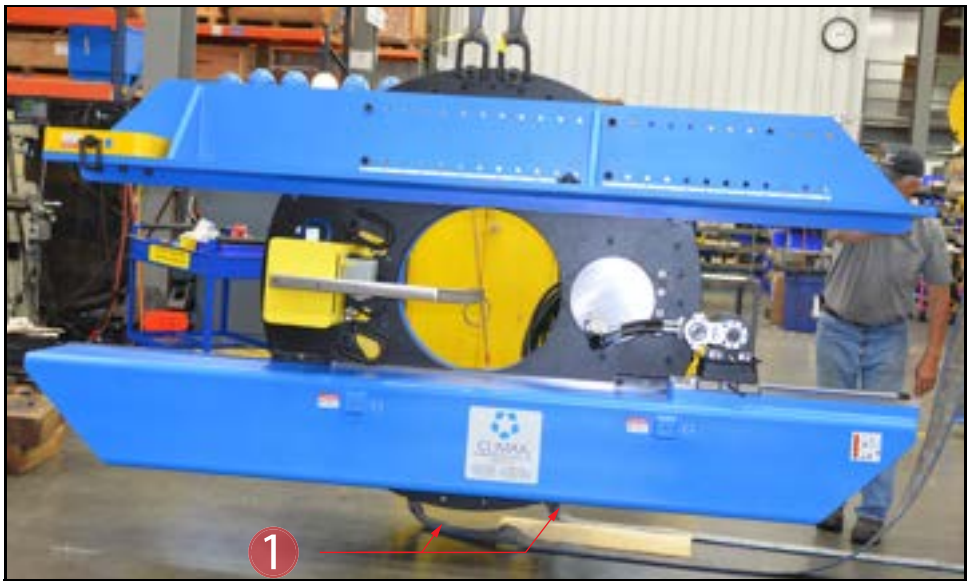

ABBILDUNG 3-29. CM6200 IN VERTIKALER POSITION

TABELLE 3-10. IDENTIFIKATION CM6200 IN VERTIKALER POSITION

Nummer	Komponente
1	Untere Gurte

5. Bei Verwendung von zwei Kränen die unteren Gurte, wie in Abbildung 3-29 dargestellt, lösen.
6. Die Maschine hoch genug anheben, um Blöcke unter den Dreharm und den Spannfutterkörper legen zu können.
7. Die Maschine auf die Blöcke absenken (siehe Abbildung 3-30). Bei Verwendung von zwei Kränen müssen die Gurte wieder an den unteren Hebeösen befestigt werden.

ABBILDUNG 3-30. VERTIKALE CM6200 AUF BLÖCKEN MIT WIEDER ANGEBRACHTEN GURTEN

8. Die Maschine senkrecht anheben, dass sie von Boden und Blöcken frei schwebt (siehe Abbildung 3-31).
9. Blöcke entfernen.

ABBILDUNG 3-31. ABHEBEN DER CM6200 VON DEN BLÖCKEN

10. Die unteren Gurte anziehen, bis die Maschine vollständig umgedreht ist (siehe Abbildung 3-32).
11. Die Blöcke unter dem Dreharm und dem Gegengewichtsarm wieder ansetzen.

ABBILDUNG 3-32. UMDREHEN DER CM6200

12. Die Maschine auf die Blöcke absenken (siehe Abbildung 3-33).
13. Die entsprechende Montagevorrichtung (Innenmontage, Außenmontage oder Flanschmontage) installieren.

ABBILDUNG 3-33. BLOCKIERSTELLEN

3.9 ZENTRIEREN UND NIVELLIEREN DER MASCHINE

NOTICE

Bei der Bearbeitung im Freien oder unter direkter Sonneneinstrahlung ist zu beachten, dass Temperaturschwankungen die Endtoleranzen beeinflussen können. CLIMAX empfiehlt unter diesen Umständen für einen temporären Schattengeber zu sorgen.

Gehen Sie wie folgt vor, um die Maschine präzise zu zentrieren und zu nivellieren:

1. Eine Messuhr verwenden, um die Werkstückoberfläche beim Drehen der Maschine zu kontrollieren.
2. Die Maschine wie folgt nivellieren:

ABBILDUNG 3-34. ANGEBRACHTE MESSUHR

   a) Für Innenmontage die Nivellierschrauben in jedem der Nivellierfüße des Spannfutters einstellen (siehe Abbildung 3-35).

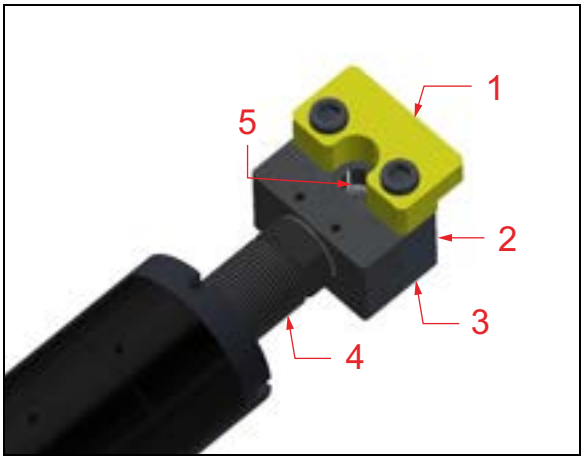

ABBILDUNG 3-35. BAUGRUPPE NIVELLIERBARER SPANNFUTTERFUß

TABELLE 3-11. IDENTIFIKATION DER NIVELLIERBAREN SPANNFUTTERFÜßE

Nummer	Komponente
1	Spannfinger
2	Spannbackeneinstellung
3	Grundplatteneinstellung
4	Abdrückschraube
5	Nivellierschraube

   b) Bei Außenmontage die Nivellierstellschrauben über der Zentrierplatte einstellen (siehe Abbildung 3-26 auf Seite 43).
3. Die Messuhr umsetzen, um die Maschinenzentrierung zu überprüfen.
4. Die Maschine wie folgt zentrieren:
   a) Für Innenmontage die gegenüberliegenden Spannfutterfußpaare einstellen (ein Fuß ist in Abbildung 3-35 dargestellt).

b) Bei Außenmontage die Zentrierstellschrauben in der Zentrierplatte einstellen (siehe Abbildung 3-26 auf Seite 43).

5. Die Maschine auf Nivellierung und Zentrierung überprüfen.
6. step 2 bis step 6 wiederholen, bis die Maschine ausgerichtet ist.
7. Die Maschine gemäß Abschnitt 3.10 auf Seite 51 anbringen (für Innenmontage) und Abschnitt 3.5.3 auf Seite 34 (für Außenmontage).
8. Nochmalige Überprüfung der Ausrichtung der Maschine. Falls Anpassungen erforderlich sind, „Fixierung der Innenmontagehalterung“ auf Seite 51 (für Innenmontage) bzw. Abschnitt 3.5.3 auf Seite 34 (für Außenmontage) wiederholen.
9. Den höchsten Punkt des Flansches markieren, damit an dieser Stelle die Anfangsfrästiefe eingestellt werden kann.
10. Entfernen Sie alle Aufhängungen.

3.10 FIXIERUNG DER INNENMONTAGEHALTERUNG

Bei Innenmontage-Konfigurationen wird die CM6200 durch die Haftreibung von acht mit Schrauben angezogenen Spannfutterfußschrauben im Werkstück gehalten.

NOTICE

Alle Spannfutterfußschrauben müssen mit mindestens 441 Nm (325 ft-lb) festgezogen sein. Der minimale Drehmomentwert der Abdrückschraube wurde mit geschmierten Gewindebolzen und einer trockenen Schrauben-Werkstück-Schnittstelle ermittelt.

Vor der Installation der CM6200 auf dem Werkstück Folgendes überprüfen:

- Die Werkstückoberfläche, die die CM6200-Abdrückschrauben berührt, ist trocken und völlig frei von Öl, Fett oder anderem Schmiermittel.

⚠ WARNING

Feuchtigkeit, Öl oder Schmiermittel auf den Kontaktflächen des Spannfußes des Werkstücks können zu einer unzureichenden Reibungskraft des Vortriebs führen, wodurch die Maschine sich verschieben oder vom Werkstück fallen kann.

- Die Gewinde der Abdrückschrauben der Spannfüße sind mit Schmiermittel zu bestreichen.

⚠ WARNING

Sollte kein Schmiermittel auf die Gewinde der Abdrückschrauben aufgetragen sein, kann dies zu einer geringeren als der vorgesehenen

Klemmkraft der Abdrückschrauben führen, wodurch sich die Maschine verschieben oder vom Werkstück fallen kann.

Gehen Sie wie folgt vor, um die Innenspannung zu installieren:

1. Alle Nivellierschrauben mit einem Drehmoment von **mindestens** 441 Nm (325 ft-lb) anziehen. Beim Anziehen die gegenüberliegenden Stützbeine wechseln, um sicherzustellen, dass die Ausrichtung des Aufbaus nicht beeinträchtigt wird.
2. Alle nicht nivellierenden Spannfutterfußschrauben ausziehen und mit einem Drehmoment von **mindestens** 441 Nm (325 ft-lb) anziehen.

⚠ WARNING

Die Füße der nivellierenden und nicht-nivellierenden Spanfutter sind mit den oben aufgeführten Drehmomenten anzuziehen. Werden die Futterfüße nicht ausreichend angezogen, kann die Maschine rutschen oder vom Werkstück fallen, was zu schweren und tödlichen Verletzungen führen kann. Siehe Abschnitt 3.5.3 für Verfahren zur Sicherung der CM6200 im Werkstück.

3. Die Abdrückschrauben mit den in Abschnitt 3.5.3 auf Seite 34 beschriebenen Verfahren sichern.
4. Die Spannfinger entfernen, falls der Maschinenbetrieb mit an den Nivellierfüßen des Spannfutters befestigten Spannfingern nicht möglich ist.

⚠ WARNING

Nicht mehr als einen Spannfinger gleichzeitig entfernen, da dies dazu führen kann, dass die Maschine in den Flansch rutscht und aus dem Werkstück fällt, was schwere und tödliche Verletzungen verursachen kann.

Spannfinger sollten nur dann entfernt werden, wenn die Fräse die notwendige Bearbeitung am Werkstück nicht durchführen kann, während diese an den Futterfüßen befestigt sind. Das Entfernen der Spannfinger reduziert die Stabilität der Maschine.

Zusätzlich zu diesem minimalen Drehmoment von 441 Nm (325 ft-lb) sollten so viele der folgenden Sicherungsmethoden wie möglich kombiniert werden. **Vertikale und invertierte Montageanwendungen müssen zusätzlich zu den verriegelten Stellfüßen entweder die Schweißplatte oder die Flanschspannvorrichtung verwenden.** Siehe Abschnitt 3.8.3 auf Seite 43 und Abschnitt 3.8.5 auf Seite 45 für weitere Informationen über vertikale und invertierte Montage.

- Interne Verschlussmutter: Jeder Abdrückschraube liegt eine interne Sicherungsmutter bei, die anzuziehen ist, wenn die Maschine zentriert

und die Abdrückschrauben gemäß Vorgabe angezogen sind. Die Verwendung der internen Verschlussmutter soll dazu beitragen, ein Zurückziehen der Abdrückschraube aufgrund von Maschinenvibrationen während des Betriebs zu verhindern. Siehe Bereich 3.5.2 auf Seite 29.

- Schweißplatte: Diese vier Platten müssen mit der Maschine gründlich auf das Werkstück geschweißt (mit einer Kehlnaht in der Länge jedes Endes und mehreren kurzen Kehlnähten quer dazu) und auf den verstellbaren Nivellierspannfutterfuß geschraubt werden.
- Flanschspannvorrichtung: Die Flanschspannvorrichtungen sind mit verstellbaren Nivellierstützen ausgestattet und bestehen aus dem Spannfinger und der internen Flanschspannvorrichtungen. Diese Elemente werden auf eine Innenfläche des Montageflansches befestigt.

DANGER

Den Kran erst entfernen, wenn die Abdrückschrauben mit dem vorgeschriebenen Drehmoment (441 Nm [325 ft-lb]) festgezogen sind und mindestens eine der Sicherungsmethoden vorhanden ist.

3.11 VERKABELUNG

WARNING

Herabstürzende oder rotierende Maschinenteile können Bedienpersonal schwerwiegend verletzen. Stellen Sie sicher, dass die Maschine am Werkstück befestigt ist, bevor Sie die Netzkabel anschließen.

Gehen Sie wie folgt vor, um den Stromanschluss zu ermöglichen:

1. Überprüfen, dass alle Kabelstecker und Verschraubungen sauber sind.
2. Verschlissene und beschädigte Teile ersetzen.
3. Sicherstellen, dass sich der Haupttrennschalter in der Position OFFEN befindet.
4. Sicherstellen, dass der Notaus-Schalter am Bedienelement gedrückt ist.
5. Sämtliche Stromversorgungen sperren.
6. Das Hauptsteuerkabel an den Hauptanschlusskasten am CM6200 Bedienelement anschließen.
7. Die Leitung an den Servomotor anschließen.
8. Die Karabinerhalterung an den Schlauchturm anbringen.
9. Das andere Ende an das HPE-Bedienfeld anbringen.
10. Die Leiterklemme am HPE-Rahmen befestigen.
11. Alle anderen Steuerkabel an die HPE-Schalttafel anschließen.

NOTICE

Der Servomotor muss an die HPE angeschlossen sein — aber nicht an die Maschine. Es besteht die Gefahr, dass der Servoantrieb beschädigt wird, wenn der Motor bei eingeschalteter HPE abgeklemmt wird.

⚠ CAUTION

Um Schäden an den Stromleitungen zu vermeiden, ist darauf zu achten, dass diese während des Betriebs frei von beweglichen Teilen und Quetschstellen sind.

12. Überprüfen, dass sich alle Personen vom Drehtisch entfernt haben.
13. Den Haupt-Trennschalter an der HPE anschließen.
14. Den Notaus-Schalter am HPE-Bedienfeld durch Drehen deaktivieren.
15. Den Notaus-Schalter am Bedienelement durch Drehen deaktivieren.
16. HPE starten.
17. Den Spindelmotor andrehen, um sicherzustellen, dass sich die Spindel in die vorgesehene Richtung dreht.
18. Den Drehvorgang beenden, falls die Richtung geändert werden muss. Bei hydraulisch angetriebenen Spindelmotoren die Schläuche entfernen und austauschen, sodass die Durchflussrichtung stimmt. Bei elektrisch angetriebenen Spindelmotoren die Richtung des Servosystems auf dem Bedienfeld umschalten.

⚠ CAUTION

Wird das unter Spannung stehende Hauptsteuerkabel getrennt, können die elektrischen Komponenten im Hauptbedienfeld beschädigt werden.

4 BETRIEB

IN DIESEM KAPITEL:

4.1 BETRIEBSVORBEREITUNG

Betreiben Sie diese Maschine nicht ohne entsprechende Schulung, um Einstell-, Bedienungs- und Wartungsarbeiten vollständig zu verstehen und sicher ausführen zu können.

⚠ WARNING

Nur Bedienpersonal, das in der Bedienung der CM6200 geschult wurde, ist befugt, die Maschine einzurichten und zu bedienen. Diese Maschine nicht bei ungünstigem Wetter ohne entsprechendem Schutz vor Witterungseinflüssen betreiben.
Zur Vermeidung schwerer Verletzungen sich während des Betriebs von beweglichen Maschinenteilen fernhalten. Achten Sie stets auf alle Personen, die sich in der Nähe der Maschine aufhalten.

NOTICE

Der Servomotor muss an die HPE angeschlossen sein — aber nicht an die Maschine. Es besteht die Gefahr, dass der Servoantrieb beschädigt wird, wenn der Motor bei eingeschalteter HPE abgeklemmt wird.

4.1.1 Überprüfungen vor Inbetriebnahme

⚠ WARNING

Rotierende Maschinenteile können zu schweren Verletzungen führen. Vor Durchführung der Vorkontrollen die Maschine ausschalten und verriegeln. Während des Betriebs stets auf den Aufenthalt aller Personen in der Nähe der Maschine achten.

Vor der Inbetriebnahme der Maschine immer die folgenden Punkte kontrollieren:

- Fräsarm und Gegengewicht sind mit einem Drehmoment von 150 Nm (110 ft-lb) am Drehtisch befestigt.

⚠ CAUTION

Überprüfen, dass sich die Maschine (einschließlich der Spindel und aller beweglichen Teile) ungehindert drehen kann.

- Die Maschine ist fest mit dem Werkstück verbunden.
- Die Spindel ist am Fräsarm und an der Adapterplatte befestigt.
- Alle Abdrück- und Spannvorrichtungsschrauben sind gesichert (mit einem Drehmoment von 441 Nm [325 ft-lb]).
- Kabel und Schläuche befinden sich außerhalb des Schwenkbereichs der beweglichen Maschinenteile.
- Alle Griffe und Werkzeuge sind aus der Maschine entfernt.
- Der Arbeitsbereich ist deutlich als Sicherheitszone gekennzeichnet.

4.1.2 Werkzeugeinrichtung

Der Fräskopf hat vier Umsetz-Schrauben neben den Befestigungsschrauben des Gehäuses. Dadurch kann der Fräskopf von der Adapterplatte weggehoben werden,

um die vertikale Ausrichtung der Spindel zu verändern. Auf der Oberseite der Adapterplatte befinden sich zwei zusätzliche Schrauben für die Einstellung des Neigungswinkels des Fräskopfes.

Da der Fräskopf auf einem Mittelstift montiert ist, muss der Winkel des Fräskopfes vor Beginn der Bearbeitung ausgerichtet werden. Diese Einstellung erfolgt mit den Einstellschrauben in den Blöcken, die entweder unter oder über dem Gehäuse montiert sind. Die Rotationseinstellschrauben ermöglichen eine leichte Drehung des Gehäuses, um eine vertikale oder horizontale Ausrichtung zum Fräsarm zu erreichen.

Gehen Sie wie folgt vor, um Fräskopf und Spindel einzustellen:

1. Die Verriegelung lösen.
2. Den Fräskopf und die Spindel einstellen.
3. Verwenden Sie die Anzeige, um den Fräskopf zu positionieren.
4. Vor dem Betrieb die Verriegelung festziehen.

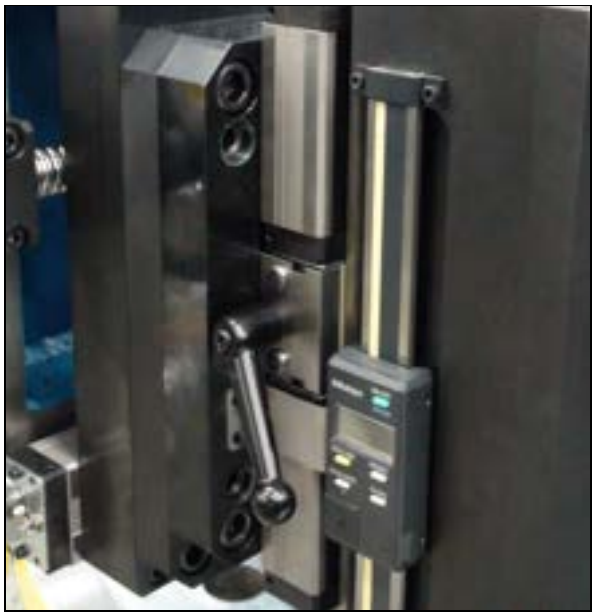

ABBILDUNG 4-1. SPINDELVERRIEGELUNG UND ANZEIGE

4.1.3 Spindelumsetzung

Die Spindelumsetzung ist der Prozess der Ausrichtung der Spindel.

NOTICE

Die Spindel muss senkrecht zur Werkzeugmaschine ausgerichtet sein, und nicht zum Werkstück, da es kein zuverlässiges Referenzobjekt ist.

Gehen Sie wie folgt vor, um die Spindel umzusetzen:

1. Wenn der Spindelantriebsmotor installiert ist, entfernen Sie ihn aus dem Spindelgetriebe, um eine einfache manuelle Drehung der Spindel zu ermöglichen.

2. Eine magnetisch haftende Messuhr am Gehäuse des Planfräsers anbringen (siehe Abbildung 4-2).

ABBILDUNG 4-2. MESSUHR AM PLANFRÄSER

TIP:

Eine rechtwinklige Vorrichtung, die von der linearen Gleitschiene aus ausgerichtet ist und senkrecht zum Fräsarm steht, kann als Referenzpunkt dienen.

3. Den Anzeiger ausziehen, um Kontakt mit der unteren Maschinenstößeloberfläche aufzunehmen (siehe Abbildung 4-3).
4. Wenn der Stift des Anzeigers die Stößeloberfläche berührt, die Skala der Anzeige auf „0“ stellen.

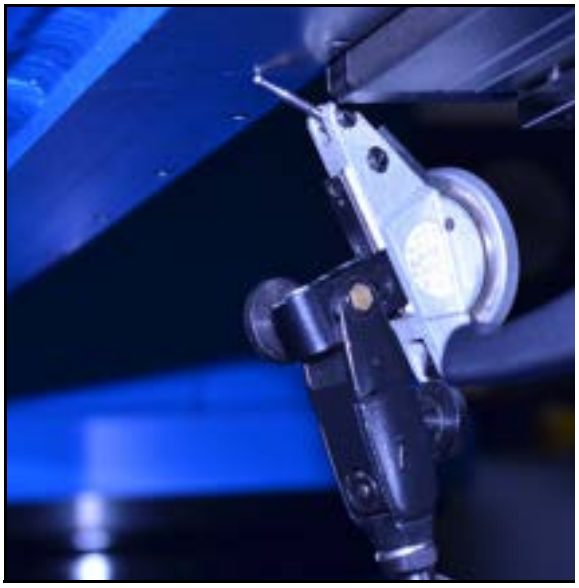

ABBILDUNG 4-3. ANZEIGER BERÜHRT MASCHINENSTÖßELOBERFLÄCHE

5. Nun die Spindel um 180° zur Maschinenstößeloberfläche drehen (siehe Abbildung 4-4).

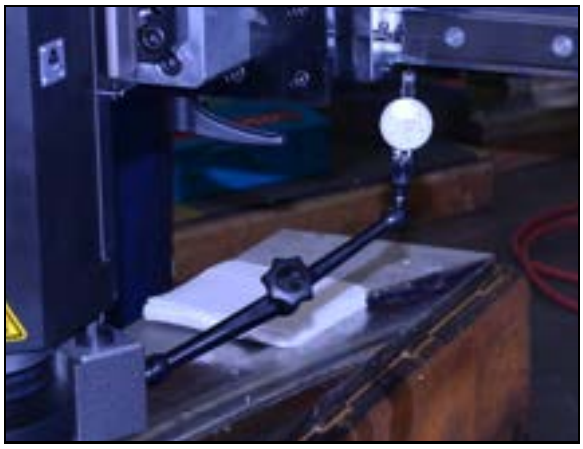

ABBILDUNG 4-4. SPINDEL ZUR STÖßELOBERFLÄCHE GEDREHT

TIP:

Bei der Standardspindel ist der Winkel auf ±1° begrenzt. Für größere Winkel wird ein Schwenkkopfadapter benötigt. Für weitere Informationen wenden Sie sich bitte an CLIMAX.

6. Notieren Sie sich den Messwert des Anzeigers. Gehen Sie wie folgt vor, falls er mehr als 0,03 mm (0,001") außerhalb der Umsetztoleranz liegt:
   a) Die vier Zylinderschrauben so lösen, dass sie nur leicht anliegen (zwischen 1-4 Nm ([1-3 ft-lb]), wie in Abbildung 4-5 dargestellt, sodass die Platte mithilfe der Umsetz-Stellschrauben verstellt werden kann.

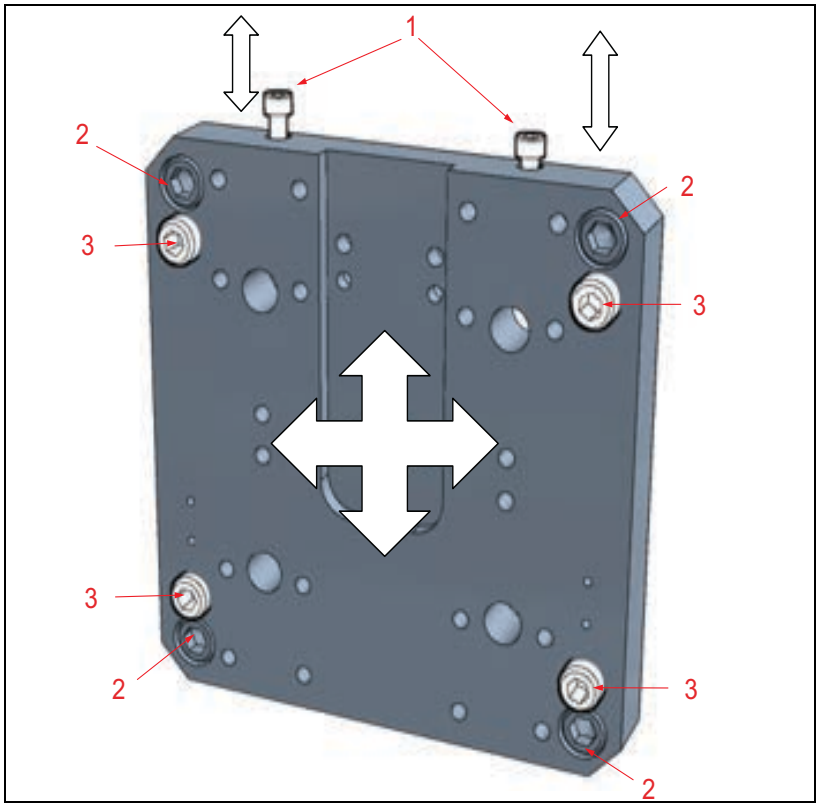

ABBILDUNG 4-5. FRÄSKOPF-MONTAGEPLATTE UND UMSETZPUNKTE

TABELLE 4-1. IDENTIFIKATION FRÄSKOPF-MONTAGEPLATTE

Nummer	Komponente
1	Y-Achse Umsetzpunkte für Drehung
2	Zuerst lösen
3	Y-Achse Umsetzpunkt

NOTICE

Auf jeder Seite des Fräskopfes befinden sich zwei Zylinderkopfschrauben, die in der Mitte der in Abbildung 4-5 gezeigten Umsetzplatte montiert sind.

b) Die Schrauben der Y-Achse so einstellen, dass der Anzeigenwert innerhalb von 0,03 mm (0,001") liegt. Siehe Abbildung 4-6.

ABBILDUNG 4-6. Y-ACHSEN-SCHRAUBENEINSTELLUNG

c) Einstellen der Schrauben der X-Achse (wie in Abbildung 4-7 dargestellt), bis der Anzeigenwert innerhalb von 0,03 mm (0,001") liegt.

7. Wiederholen Sie den Vorgang des Schwenkens des Anzeigers an den Positionen 0° und 180° und der Einstellung der Spindelausrichtung, bis an beiden Positionen derselbe Anzeigewert erreicht wird.
8. Wenn beide Achsen innerhalb der Toleranz liegen, die Befestigungsschrauben mit 61 Nm (45 ft-lbs) festziehen.

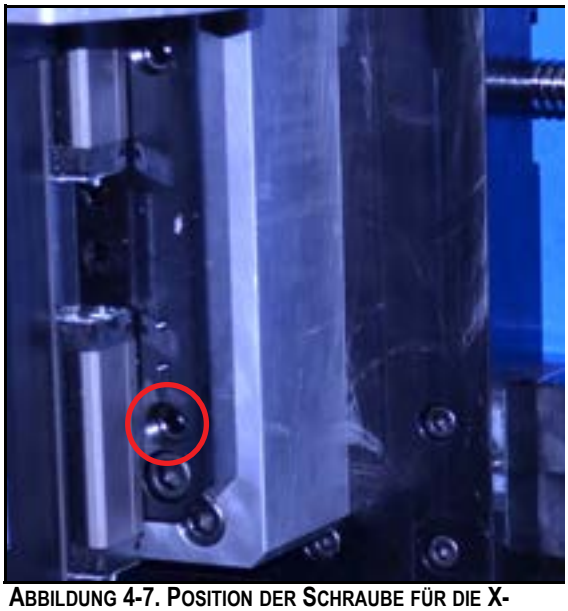

ABBILDUNG 4-7. POSITION DER SCHRAUBE FÜR DIE X-ACHSE

TIP:

Die Messuhr während des letzten Anziehens der Befestigungsschrauben am Gehäuse belassen, um nachzuprüfen, dass sich das Gehäuse beim Spannen nicht verstellt.

9. Ggf. den Spindelantriebsmotor wieder einsetzen.

Wenn die Maschine betriebsbereit ist, beachten Sie die bearbeitete Oberfläche nach dem ersten Durchgang.

Ein schraffiertes Muster, wie in der rechten Spalte von Abbildung 4-8 dargestellt, ist das optimale Ergebnis.

Wenn die Ergebnisse, wie auf der linken Seite von Abbildung 4-8 dargestellt kantenverformt sind, sind die X-Achsenschrauben entsprechend Schritt c auf Seite 59 einzustellen.

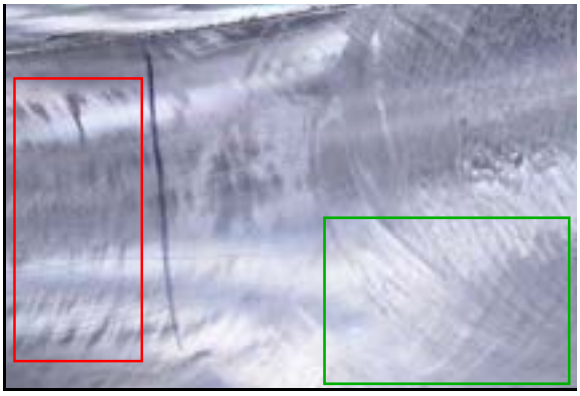

ABBILDUNG 4-8. ERGEBNISSE DER FRÄSDURCHLÄUFE

4.2 BEDIENELEMENT

4.2.1 Koordinatensysteme

Diese Maschine verfügt über zwei separate Koordinatensysteme, die die Position der Maschine verfolgen. Der Nullpunkt kann jederzeit auf einem der beiden Koordinatensysteme zurückgesetzt werden, ohne die Position im anderen System zu beeinflussen.

NOTICE

Die Maschine reagiert je nach verwendetem Koordinatensystem unterschiedlich auf Bewegungsanweisungen.

Absolute Koordinaten

Im absoluten Koordinatensystem sind alle Bewegungsziele relativ zu einer bestimmten absoluten Nullposition. Beispiel: Eine Zieleingabe von 90° führt dazu, dass sich die Maschine zur absoluten 90°-Marke bewegt, unabhängig davon, wo sie sich aktuell befindet. Die Maschine stoppt in der 90°-Position, unabhängig davon, ob die Bewegungsrichtung + oder - ist. Die Fahrtrichtung für absolute Koordinaten kann gesteuert werden.

Eine Bewegung von 0° bis 90° in die Plus-Richtung führt zu einer 90°-Drehung in Plus-Richtung. Eine Bewegung von 0° bis 90° in die Minusrichtung führt zu einer 270°-Drehung in Minusrichtung, wobei die Endposition immer die absolute 90°-Position ist.

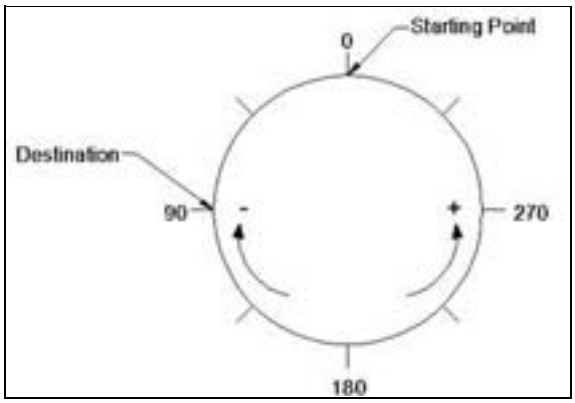

ABBILDUNG 4-9. ABSOLUTE KOORDINATEN

Inkrementale Koordinaten

Im inkrementalen Koordinatensystem sind die Bewegungsinkremente immer relativ zur aktuellen Position der Maschine. Beispiel: Wenn sich die Maschine in der 180°-Position relativ zum absoluten Nullpunkt befindet, ergibt eine Bewegung von minus 90° eine endgültige absolute Position von 90°. Eine Bewegung von plus 90° ergibt eine absolute Position von 270°.

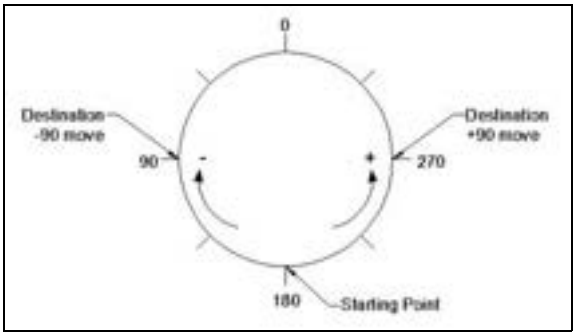

ABBILDUNG 4-10. INKREMENTALE KOORDINATEN

4.2.2 Übersicht Maschinensteuerungen

Das MMS-Bedienelement ist die Schnittstelle zur Verwaltung der Vorgänge der CM6200. Anhand der folgenden Bildschirme werden die verschiedenen Funktionen der Maschine gesteuert und eingerichtet. Das Bedienelement ist in Abbildung 4-11 auf Seite 61 dargestellt.

ABBILDUNG 4-11. CM6200 BEDIENELEMENT

Wenn das MMS-Bedienelement eingeschaltet ist, erscheint der in Abbildung 4-12 dargestellte Bildschirm. Die Voreinstellungen gelten für alle Parameter der Maschine.

ABBILDUNG 4-12. ANZEIGE DES BEGRÜßUNGSBILDSCHIRMS BEI SYSTEMSTART

NOTICE

Die Benutzereinstellungen werden beim Ausschalten des Systems nicht gespeichert.

Nach dem Begrüßungsbildschirm erscheint der Startbildschirm (Abbildung 4-13 auf Seite 63) auf dem MMS-Bedienelement. Der Benutzer wird vor dem Betrieb der Maschine gewarnt, und muss die Parameter und Anschlüsse durch Drücken der RESET-Taste zurücksetzen, um zum Hauptmenü zu gelangen.

ABBILDUNG 4-13. RÜCKSETZBILDSCHIRM BEI START

Wenn die Notaus-Taste beim Anfahren der Maschine noch gedrückt ist, ist die blaue Starttaste (RESET) deaktiviert und der Text unter der Taste gibt Anweisungen zum Starten.

ABBILDUNG 4-14. BILDSCHIRM MIT DEAKTIVIERTER RÜCKSETZTASTE

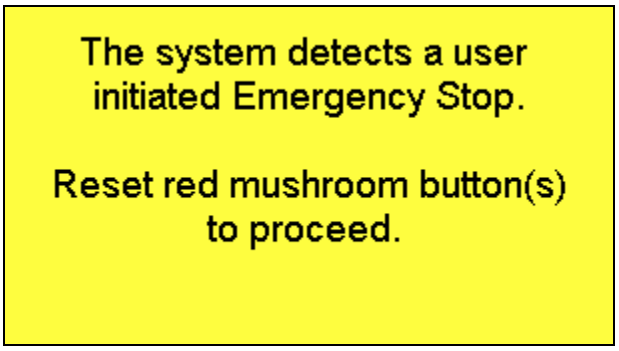

ABBILDUNG 4-15. POPUP-BILDSCHIRM NACH ZURÜCKSETZEN DES NOTAUS-SCHALTERS

Dieser Popup-Bildschirm erscheint auch bei Aktivierung des NOTAUS-Schalters. Nachdem der Benutzer den Fehler behoben hat, erscheint der Startbildschirm des Systems.

Andere mögliche Fehler im System werden durch weitere Popup-Fenster angezeigt:

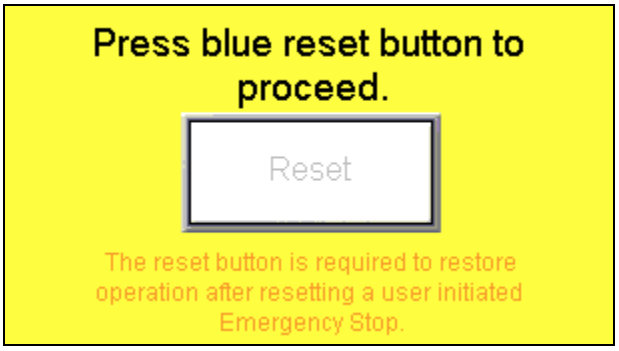

ABBILDUNG 4-16. ANFORDERUNG ZUM ZURÜCKSETZEN DES POPUP-BILDSCHIRMS

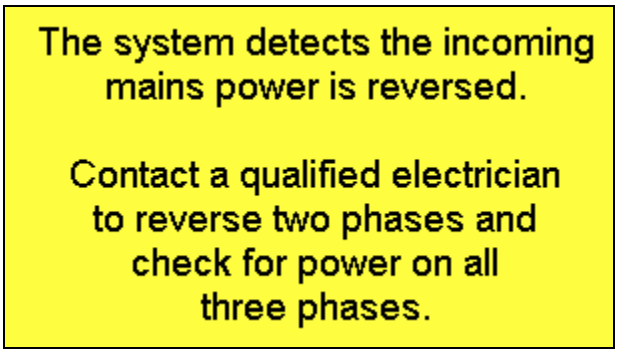

ABBILDUNG 4-17. WARNUNG BEI UMGEKEHRT GEPOLTER STROMZUFUHR

Nachdem die Fehler behoben wurden, wird die Reset-Taste aktiv und das System kann zurückgesetzt werden. Nach dem Zurücksetzen des Systems leitet das MMS-Bedienelement zum Hauptmenübildschirm weiter.

CAUTION

Stromführende Kabel nicht vom System trennen! Dies würde zu Schäden am System führen.

WARNING

Warnhinweis zum Servomotor: Keine Kabel anschließen oder trennen, während die Anlage unter Strom steht.

4.2.3 Hauptmenü

Der in Abbildung 4-18 dargestellte Hauptmenübildschirm bietet Zugang zu allen wichtigen Bildschirmen für die Maschinenbedienung.

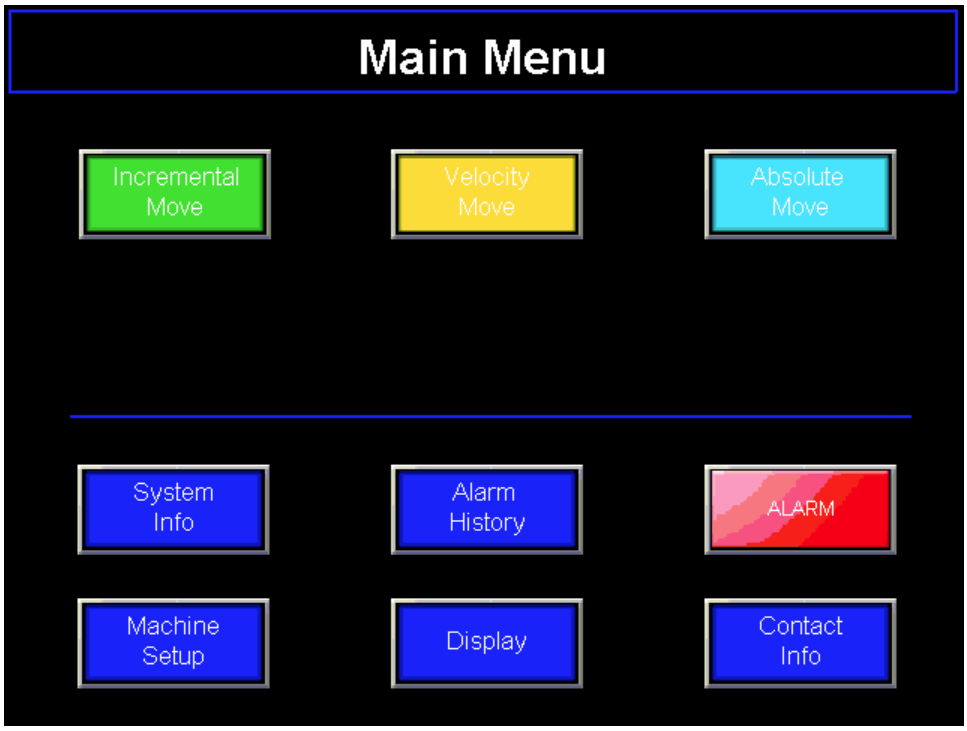

ABBILDUNG 4-18. HAUPTMENÜ OHNE SERVOMOTOR-WARNUNG

Alle Tasten sind zur Bedienung aktiviert. Manche der Schaltflächen aktivieren Eingabe-Unterbildschirme. Weitere Erläuterungen zu den einzelnen Bildschirmen finden sich im Folgenden.

Die Tasten sind farblich gekennzeichnet, um die Erkennung der verschiedenen Betriebsarten zu erleichtern. Inkrementale Koordinatenfunktionen sind grün, absolute hellblau kodiert.

4.2.4 Maschineneinrichtung

Der Bildschirm Maschineneinrichtung, der in Abbildung 4-19 dargestellt ist, zeigt die Parameter der Maschine an, die vom Bediener eingestellt werden können.

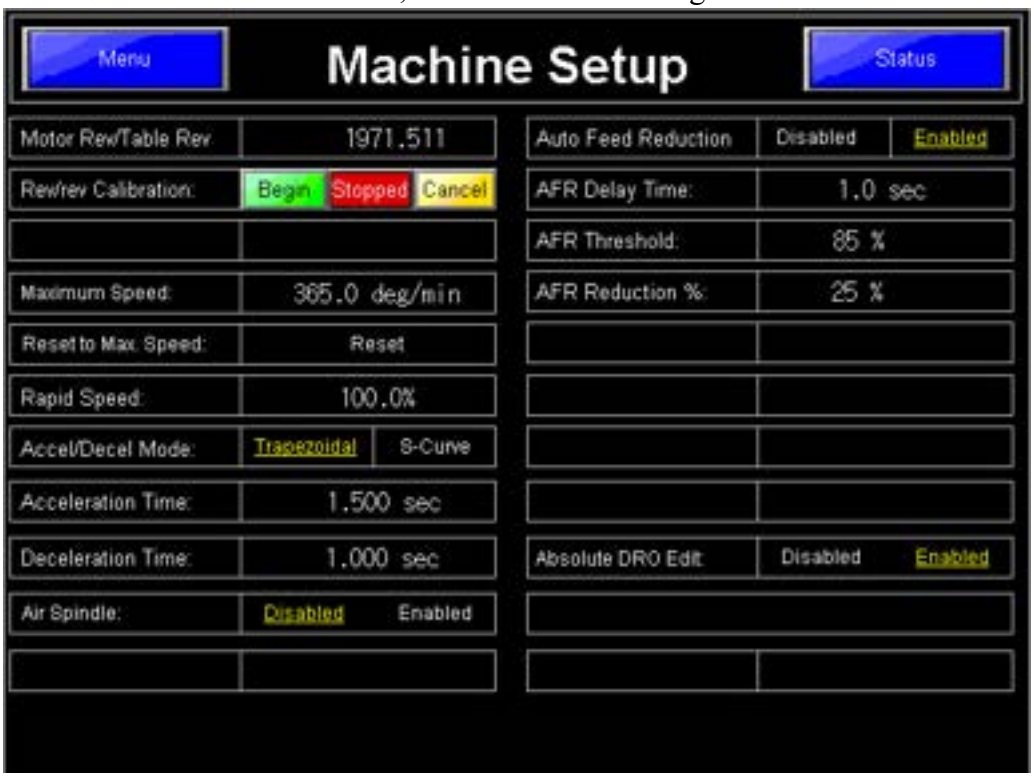

ABBILDUNG 4-19. BILDSCHIRM MASCHINENEINRICHTUNG

Die werkseitigen Standardeinstellungen für dieses System werden in Abbildung 4-19 gezeigt. Nicht die Daten der Motordrehzahl/Drehtischrotation ändern, da diese Daten auf der tatsächlichen Übersetzung der Maschine basieren.

Auf diesem Bildschirm ist die Geschwindigkeit Schnell eingestellt. Diese Funktion ist auf anderen Bildschirmen verfügbar, wird aber hier eingestellt.

Die Automatische Vorschubreduzierung (AFR) ist standardmäßig AKTIVIERT. Diese Funktion schützt die Maschine vor Beschädigungen durch Überlastung. Wenn die Maschine während des Fräsens auf Widerstand durch Erhöhungen oder andere Unregelmäßigkeiten stößt, die über den GRENZWERT DER AFR-FUNKTION hinausgehen, zählt das System die ZEITVERZÖGERUNG DER AFR-FUNKTION und reduziert automatisch den Vorschub um den in % eingestellten VORSCHUBREDUZIERSATZ. Wenn der Widerstand dann noch immer vorhanden ist, überwacht das System ihn weiterhin in den Intervallen der ZEITVERZÖGERUNG DER AFR-FUNKTION und reduziert den Vorschub jeweils um den in % eingestellten VORSCHUBREDUZIERSATZ. Das Bedienpersonal kann die Maschine manuell am Steuergerät auf Normalgeschwindigkeit zurücksetzen.

Durch Berühren eines der Zahlenfelder erscheint der folgende Eingabebildschirm (Abbildung 4-20). Geben Sie die erforderlichen Daten ein und drücken Sie EINGABE.

ABBILDUNG 4-20. NUMMERNEINGABEFELD FÜR DIE MASCHINENEINRICHTUNG

Alle Einstellungen auf dieser Seite werden beibehalten und auch beim Ausschalten der Maschine dauerhaft gespeichert.

Wenn für einen der Setup-Parameter eine ungültige Zahl eingegeben wird, erscheint die in Abbildung 4-21 angezeigte Meldung. Bestätigen Sie dieses Popup mit OK und geben Sie die erforderlichen Daten in den EINSTELL-Bildschirm ein.

ABBILDUNG 4-21. BILDSCHIRM ZUR ÜBERPRÜFUNG DER KONFIGURATIONSPARAMETER

4.2.5 Inkrementelle Bewegung

Der in Abbildung 4-22 dargestellte Bildschirm für inkrementelle Bewegungen ermöglicht es, den Betrieb der CM6200 mithilfe eines inkrementellen Koordinat-

ensystems zu steuern.

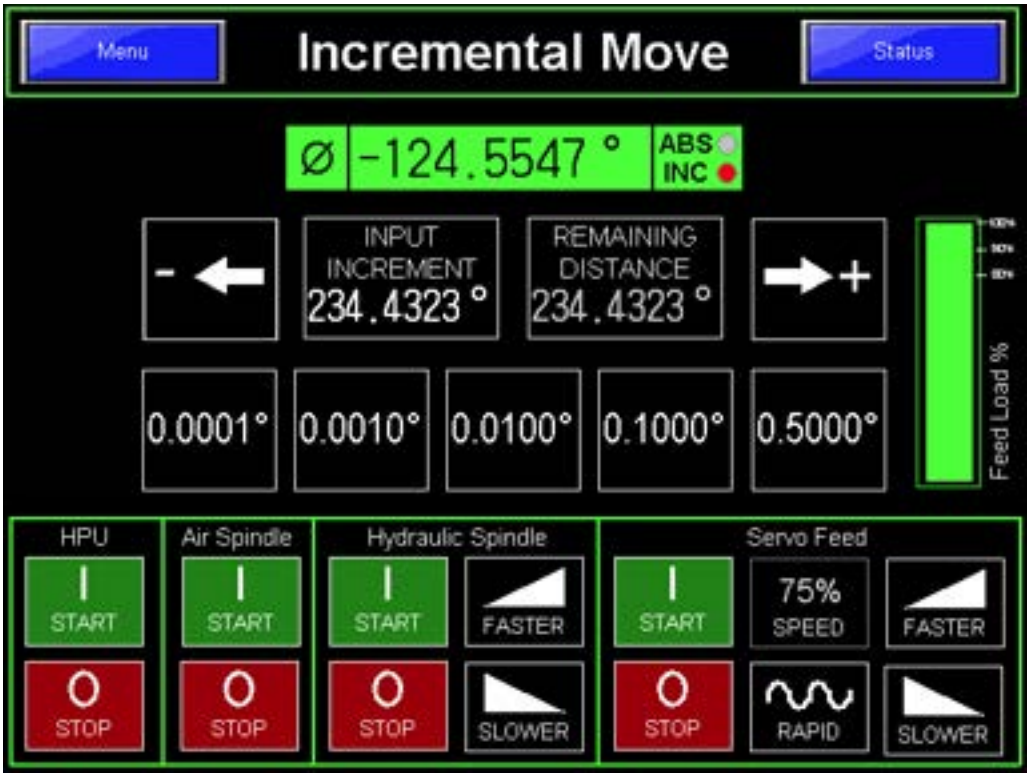

ABBILDUNG 4-22. BILDSCHIRM FÜR INKREMENTELLE BEWEGUNG

Inkrementelle Bewegungen sind relativ zur aktuellen Position, in der vom Benutzer eingegebenen Richtung und Geschwindigkeit.

Eine inkrementelle Bewegung ist immer die im Feld „Eingangsinkrement“ eingegebene Strecke in der gewählten Richtung und Geschwindigkeit.

NOTICE

Abhängig von der ausgewählten Konfiguration der CM6200-Optionen sind nur bestimmte Funktionen aktiviert und sichtbar. Infolgedessen sind einige der oben aufgeführten Funktionen am mitgelieferten Steuergerät möglicherweise nicht verfügbar.

4.2.6 Absolute Bewegung

Der in Abbildung 4-23 dargestellte Bildschirm für absolute Bewegungen ermöglicht es, den Betrieb der CM6200 mithilfe eines absoluten Koordinatensys-

tems zu steuern.

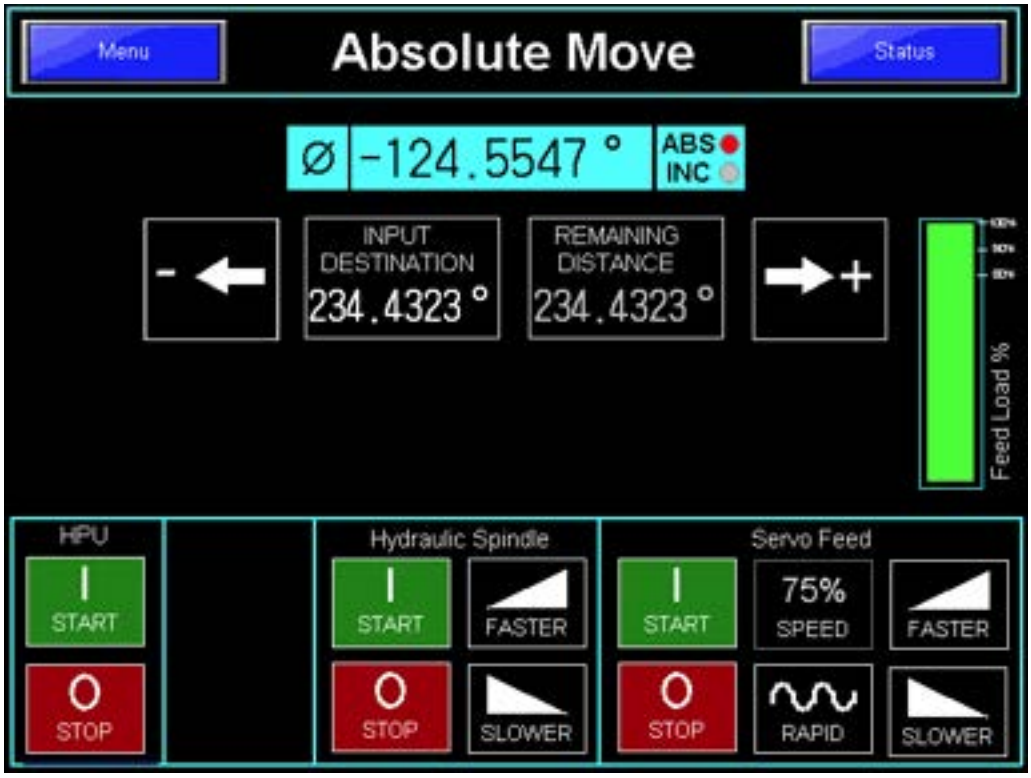

ABBILDUNG 4-23. BILDSCHIRM FÜR ABSOLUTE BEWEGUNG

Absolute Bewegungen orientieren sich an der absoluten Nullposition, die sich überall entlang des Umfangs eines 360°-Kreises befinden kann. Anders als bei inkrementellen Bewegungen resultiert die absolute Bewegung auf ein eingegebenes Ziel bezogen auf die Position NULL hin, mit der vom Benutzer eingegebenen Richtung und Geschwindigkeit.

NOTICE

Abhängig von der ausgewählten Konfiguration der CM6200-Optionen sind nur bestimmte Funktionen aktiviert und sichtbar. Infolgedessen sind einige der oben aufgeführten Funktionen am mitgelieferten Steuergerät möglicherweise nicht verfügbar.

4.2.7 Bewegung mit inkrementeller Geschwindigkeit

Der Bildschirm für die inkrementelle Geschwindigkeitsbewegung, in Abbildung 4-24 gezeigt, ermöglicht die Steuerung der Bewegung der CM6200 nach Prozent-

satz der maximalen Geschwindigkeit.

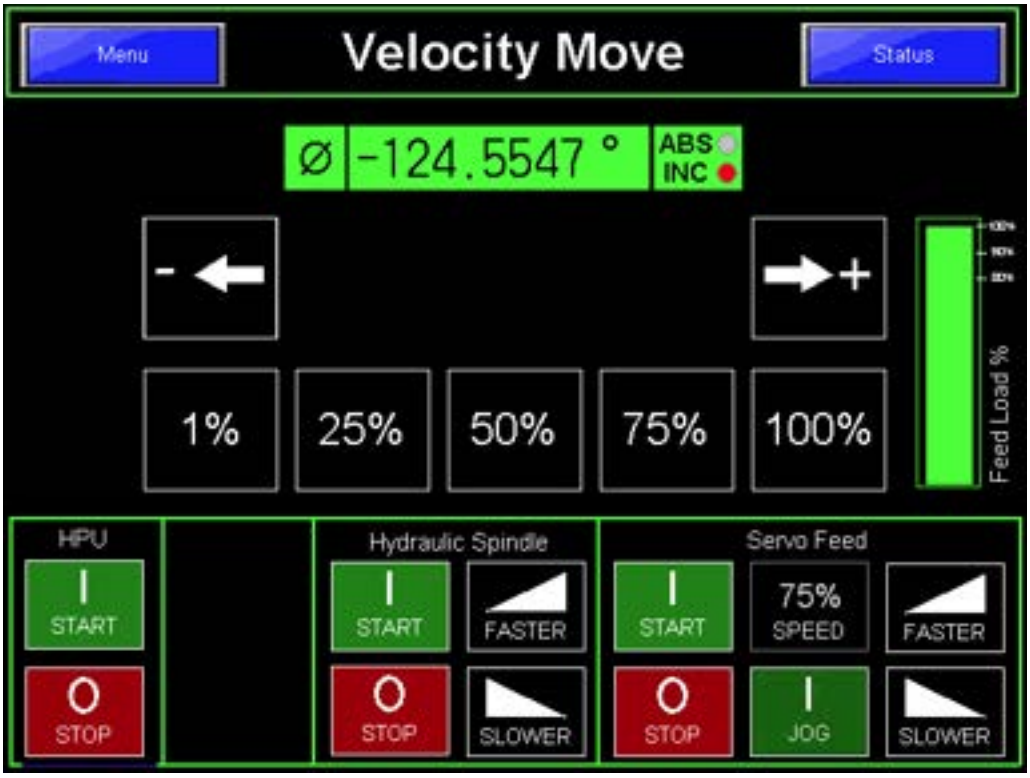

ABBILDUNG 4-24. BILDSCHIRM FÜR DIE BEWEGUNG MIT INKREMENTELLER GESCHWINDIGKEIT

Beachten Sie den Farbcode und den Identifikationspunkt für den Bildschirm für die Bewegung mit inkrementeller Geschwindigkeit im Vergleich zu dem für Bewegung mit absoluter Geschwindigkeit. Um eine beliebige Position inkrementell anzufahren, halten Sie die JOG-Taste gedrückt oder berühren Sie die Starttaste.

⚠ WARNING

Abhängig von der ausgewählten Konfiguration der CM6200-Optionen sind nur bestimmte Funktionen aktiviert und sichtbar. Infolgedessen sind einige der oben aufgeführten Funktionen am mitgelieferten Steuergerät möglicherweise nicht verfügbar.

4.2.8 Bewegung mit absoluter Geschwindigkeit

Der Bildschirm für die absolute Geschwindigkeitsbewegung, in Abbildung 4-25 gezeigt, ermöglicht die Steuerung der Bewegung der CM6200 nach Prozentsatz

der maximalen Geschwindigkeit.

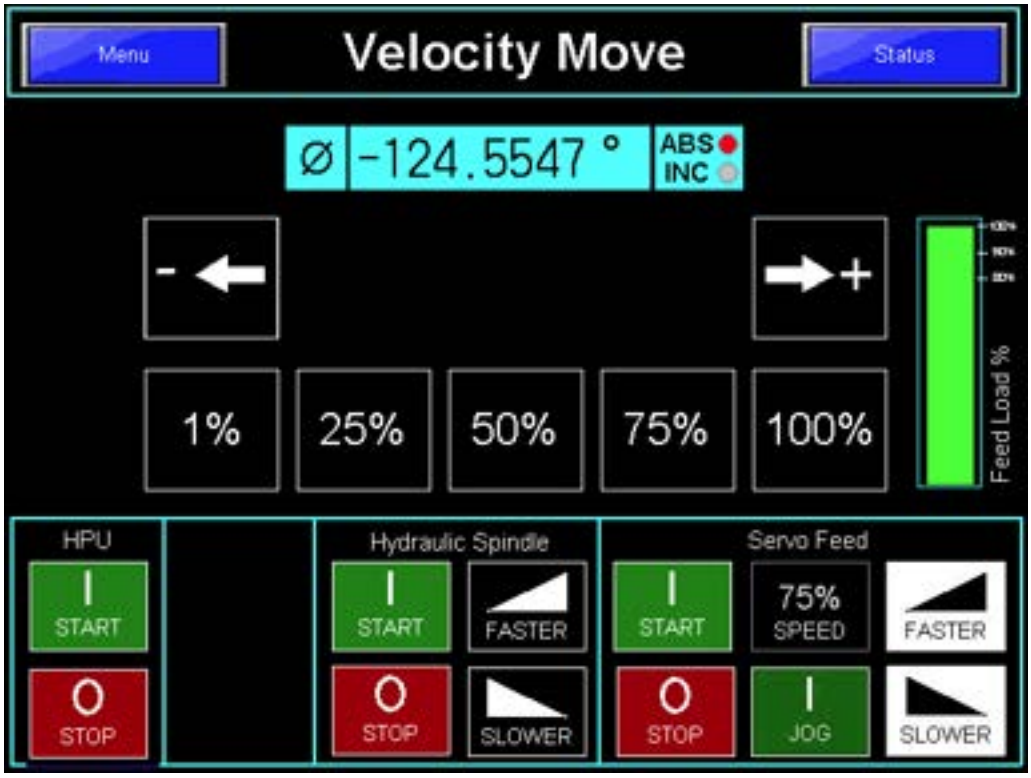

ABBILDUNG 4-25. BILDSCHIRM FÜR DIE BEWEGUNG MIT ABSOLUTER GESCHWINDIGKEIT

Beachten Sie die Farbe und den Identifikationspunkt für absolute Koordinaten. Die Funktion ist die gleiche wie beim inkrementellen Bildschirm, aber die Bewegung erfolgt in Bezug auf den absoluten Nullpunkt.

NOTICE

Abhängig von der ausgewählten Konfiguration der CM6200-Optionen sind nur bestimmte Funktionen aktiviert und sichtbar. Infolgedessen sind einige der oben aufgeführten Funktionen am mitgelieferten Steuergerät möglicherweise nicht verfügbar.

4.2.9 Popup-Anzeigen

Current Position may not be changed while moving

OK

Please enter a distance for this move.

OK

Please select a direction for this move.

OK

Machine must be stopped before changing operation mode.

OK

Machine must be stopped before changing machine setup

OK

Automatic Feed Reduction has reduce the feed rate to avoid overload fault

OK

Overload Fault Imminent

Feed Rate will be reduced by 456 %
in less than45.6 seconds.

OK

The system detects that the contactor for the hydraulic pump is not engaging.

An electrician must investigate.

The system detects the thermal overload relay protecting the HPU motor has tripped. Once the cause of the overload is corrected, the overload relay inside the electrical must be reset by a qualified technician.

The system detects that the Air Spindle is enabled, and supply air pressure is low.

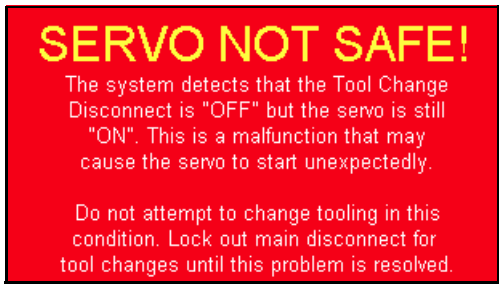

4.2.10 Alarmverlauf

4.2.11 Statusbildschirm

Der Statusbildschirm, dargestellt in Abbildung 4-26, zeigt den aktuellen Status der Komponenten der CM6200..

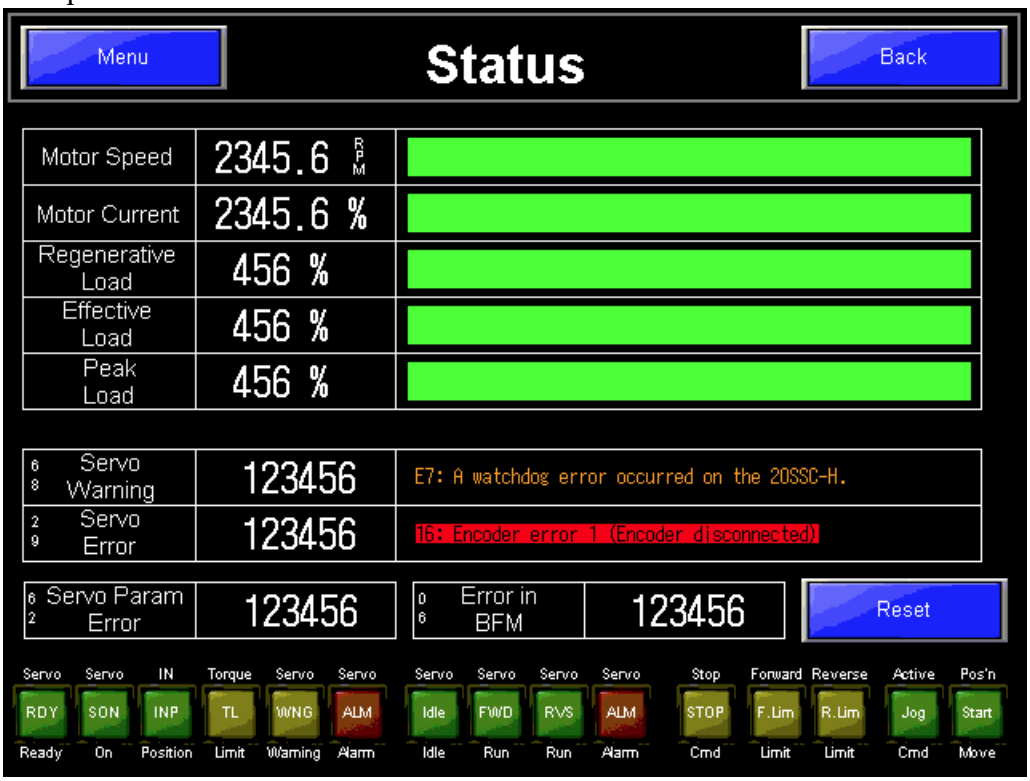

ABBILDUNG 4-26. STATUSBILDSCHIRM

Der Statusbildschirm wird normalerweise nur zur Fehlerbehebung oder zur Kontaktaufnahme mit CLIMAX bei Problemen verwendet.

NOTICE

Abhängig von der ausgewählten Konfiguration der CM6200-Optionen sind nur bestimmte Funktionen aktiviert und sichtbar. Infolgedessen sind einige der oben aufgeführten Funktionen am mitgelieferten Steuergerät möglicherweise nicht verfügbar.

4.2.12 Systeminformationen

Der Systeminformationsbildschirm, dargestellt in Abbildung 4-27, zeigt Informationen zu Betrieb und Identifizierung der Maschine an.

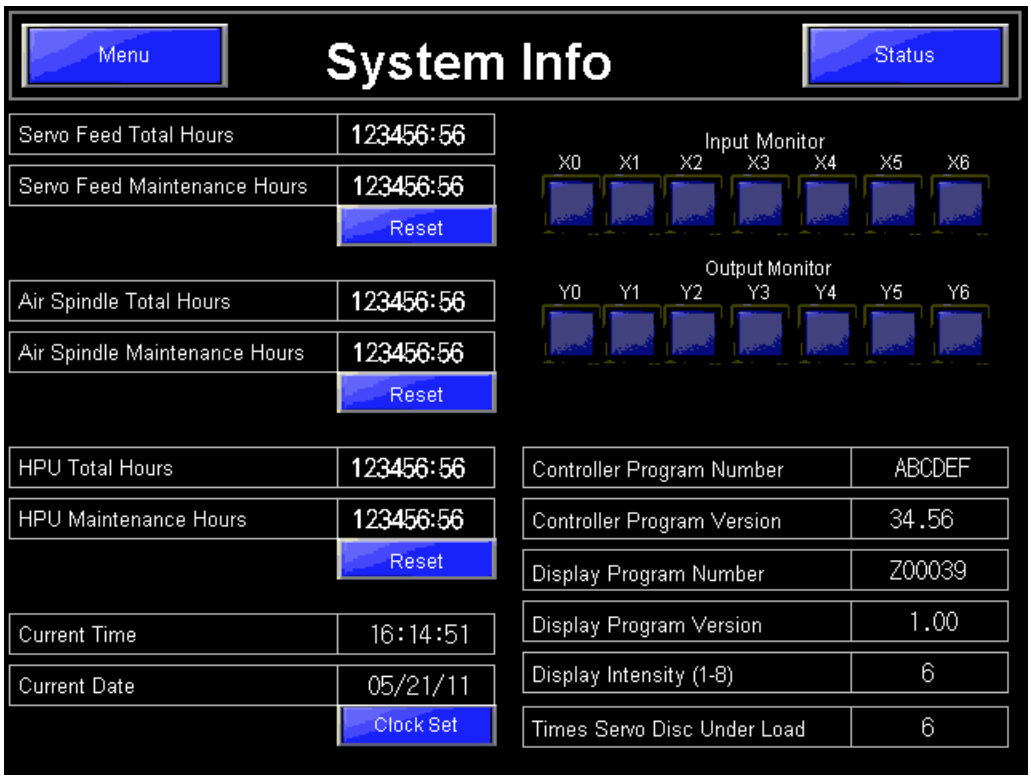

ABBILDUNG 4-27. BILDSCHIRM MIT SYSTEMINFORMATIONEN

NOTICE

Abhängig von der ausgewählten Konfiguration der CM6200-Optionen sind nur bestimmte Funktionen aktiviert und sichtbar. Infolgedessen sind einige der oben aufgeführten Funktionen am mitgelieferten Steuergerät möglicherweise nicht verfügbar.

4.3 RUNDFRÄSEN

WARNING

Vor dem Fräsen ist eine Sichtprüfung und Überprüfung des Arbeitsbereichs durchzuführen. Stellen Sie sicher, dass alle notwendigen Maßnahmen getroffen wurden, um ein versehentliches Blockieren rotierender Teile zu verhindern. Hindernisse im rotierenden Drehtisch, der Gegengewichtsanordnung und dem Fräskopf stellen ein Sicherheitsrisiko für den Betrieb dar und können zu schweren und tödlichen Verletzungen führen.

4.3.1 Einbau des Fräser-Schneidkopfs

Gehen Sie wie folgt vor, um den Fräser-Schneidkopf zu installieren:

1. Überprüfen, dass das Schneidwerkzeug scharf und frei von Kerben ist.
2. Überprüfen, dass die Spindel vollständig gestoppt ist und die Stromversorgung unterbrochen wurde.
3. Schmutz und Spänen von der Spindelkegelfläche entfernen.
4. Fräser in die Spindel einsetzen. Sicherstellen, dass das Schneidwerkzeug in die Antriebsnocken greift.
5. Die Zugbolzen installieren, um das Schneidwerkzeug in der Spindel zu sichern.

4.3.2 Einstellung der Anzeige (Fräskopf-Ausrüstung)

Für die meisten Arbeiten kann einfach die Anzeige eingeschaltet und die Taste NULL/ABS gedrückt werden, um die Anzeige auf Null zu setzen, bevor Einstellungen am Fräskopf vorgenommen werden. Die Anzeige gibt die korrekten Abstände in der Digitalanzeige an (siehe Abbildung 4-28).

ABBILDUNG 4-28. ANZEIGETASTEN UND DISPLAY

4.3.3 Sichere Betriebsbereiche

Tabelle 4-2 auf Seite 77 zeigt die Schnittgeschwindigkeit in sfpm (surface feet per minute) und smpm (surface meters per minute) für einen gegebenen Werkzeugdurchmesser und eine gegebene Hydraulikmotorgröße bei 60 Hz und 76 Liter pro Minute (lpm) oder (20 Gallonen pro Minute [gpm]). Tabelle 4-3 auf Seite 78 zeigt die gleichen Informationen bei 50 Hz und 63 lpm (16,6 gpm).

⚠ CAUTION

Wählen Sie keine Motor- und Werkzeugkombination, die bei weniger als 45,72 smpm (150 sfpm) bei 76 lpm (20 gpm) liegt. Die resultierende Spitzenkraft am Fräser könnte die Maschine beschädigen. Es ist akzeptabel, ein Werkzeug mit weniger als 45,72 smpm (150 sfpm) zu betreiben, solange der Wert bei 76 lpm (20 gpm) größer als 45,72 smpm (150 sfpm) ist.

Wenn das Bedienpersonal sich dafür entscheidet, die Maschine über die konstruktiven Einschränkungen hinaus zu betreiben, geschieht dies auf eigene Gefahr.

TABELLE 4-2. MAXIMALWERTE IN SFPM/SMPM MIT HYDRAULIKMOTOR BEI 60 HZ UND 76 LPM (20 GPM)

Werkzeugdurchmesser	Optionale Hydraulikmotorgrößen							
	101,6 ccm (6,2 cu-in)	131 ccm (8,0 cu-in)	157,3 cm3 (9,6 in3)	195,0 ccm (11,9 cu-in)	244,17 ccm (14,9 cu-in)	18,7 ccm (18,7 cu-in)	24,0 ccm (24,0 cu-in)	488,3 ccm (29,8 cu-in)
1" (1")	59,1 smpm (194 sfpm)	46 smpm (151 sfpm)	38,1 smpm (125 sfpm)	30,8 smpm (101 sfpm)	24,7 smpm (81 sfpm)	24,7 smpm (64 sfpm)	15,2 smpm (50 sfpm)	12,2 smpm (40 sfpm)
51 mm (2")	118,6 smpm (389 sfpm)	92,1 smpm (302 sfpm)	76,2 smpm (250 sfpm)	61,6 smpm (202 sfpm)	49,1 smpm (161 sfpm)	39,3 smpm (129 sfpm)	30,5 smpm (100 sfpm)	24,4 smpm (80 sfpm)
102 mm (4")	236,8 smpm (777 sfpm)	183,8 smpm (603 sfpm)	152,4 smpm (500 sfpm)	122,8 smpm (403 sfpm)	98,5 smpm (323 sfpm)	78,6 smpm (258 sfpm)	61,0 smpm (200 sfpm)	48,8 smpm (160 sfpm)
127 mm (5")	296,0 smpm (971 sfpm)	229,8 smpm (754 sfpm)	190,2 smpm (624 sfpm)	153,6 smpm (504 sfpm)	122,8 smpm (403 sfpm)	98,2 smpm (322 sfpm)	76,2 smpm (250 sfpm)	61,0 smpm (200 sfpm)
152 mm (152 mm)	355,4 smpm (1,166 sfpm)	275,8 smpm (905 sfpm)	228,3 smpm (749 sfpm)	184,4 smpm (605 sfpm)	147,5 smpm (484 sfpm)	117,7 smpm (386 sfpm)	91,4 smpm (300 sfpm)	73,2 smpm (240 sfpm)
203 mm (8")	473,7 smpm (1.554 sfpm)	367,6 smpm (1.206 sfpm)	275,8 smpm (905 sfpm)	245,7 smpm (806 sfpm)	196,6 smpm (645 sfpm)	157,0 smpm (515 sfpm)	121,9 smpm (400 sfpm)	97,5 smpm (320 sfpm)
254 mm (10")	592,2 smpm (1.943 sfpm)	459,6 smpm (1.508 sfpm)	367,6 smpm (1.206 sfpm)	307,2 smpm (1.008 sfpm)	245,7 smpm (806 sfpm)	196,3 smpm (644 sfpm)	152,4 smpm (500 sfpm)	122,2 smpm (401 sfpm)

TABELLE 4-3. MAXIMALWERTE IN SFPM/SMPM MIT HYDRAULIKMOTOR BEI 50 HZ UND 63 LPM (16,6 GPM)

Werkzeugdurchmesser	Optionale Hydraulikmotorgrößen							
	131 ccm (8,0 cu-in)	157,3 cm3 (9,6 in3)	195,0 ccm (11,9 cu-in)	244,17 ccm (14,9 cu-in)	18,7 ccm (18,7 cu-in)	24,0 ccm (24,0 cu-in)	488,3 ccm (29,8 cu-in)	101,6 ccm (6,2 cu-in)
1" (1")	49,1 smpm (161 sfpm)	38,1 smpm (125 sfpm)	31,7 smpm (104 sfpm)	25,6 smpm (84 sfpm)	20,4 smpm (67 sfpm)	16,2 smpm (53 sfpm)	12,5 smpm (41 sfpm)	10,1 smpm (33 sfpm)
51 mm (2")	98,5 smpm (323 sfpm)	76,5 smpm (251 sfpm)	63,4 smpm (208 sfpm)	51,2 smpm (168 sfpm)	40,8 smpm (134 sfpm)	32,9 smpm (108 sfpm)	25,3 smpm (83 sfpm)	20,1 smpm (66 sfpm)
102 mm (4")	196,6 smpm (645 sfpm)	152,4 smpm (500 sfpm)	126,49 smpm (415 sfpm)	101,8 smpm (334 sfpm)	81,7 smpm (268 sfpm)	65,2 smpm (214 sfpm)	50,6 smpm (166 sfpm)	40,5 smpm (133 sfpm)
127 mm (5")	245,7 smpm (806 sfpm)	109,8 smpm (626 sfpm)	157,9 smpm (518 sfpm)	127,4 smpm (418 sfpm)	101,8 smpm (334 sfpm)	81,4 smpm (267 sfpm)	63,4 smpm (208 sfpm)	50,6 smpm (166 sfpm)
152 mm (152 mm)	295,1 smpm (968 sfpm)	228,9 smpm (751 sfpm)	189,6 smpm (622 sfpm)	153,0 smpm (502 sfpm)	122,5 smpm (402 sfpm)	97,5 smpm (320 sfpm)	75,9 smpm (249 sfpm)	60,7 smpm (199 sfpm)
203 mm (8")	393,2 smpm (1.290 sfpm)	305,1 smpm (1.001 sfpm)	228,9 smpm (751 sfpm)	203,9 smpm (669 sfpm)	163,1 smpm (535 sfpm)	130,2 smpm (427 sfpm)	101,2 smpm (332 sfpm)	81,1 smpm (266 sfpm)
254 mm (10")	491,6 smpm (1.613 sfpm)	381,6 smpm (1.252 sfpm)	305,1 smpm (1.001 sfpm)	255,1 smpm (837 sfpm)	203,9 smpm (669 sfpm)	167,9 smpm (551 sfpm)	126,5 smpm (415 sfpm)	101,5 smpm (333 sfpm)

Die dargestellten Farben entsprechen den Definitionen in Tabelle 4-4.

TABELLE 4-4. DEFINITION DER BETRIEBSBEREICHSFARBEN

SMPM/SFPM	Definition
<45,7 smpm (150 sfpm)	Nicht in Betrieb nehmen
45,7 – 76,2 smpm (150 – 250 sfpm)	Betriebsbereit
76,2 – 152,4 smpm (250 – 500 sfpm)	Optimaler Betriebsbereich
>152,4 smpm (500 sfpm)	Betriebsbereit

4.3.4 Austausch der Fräseinheit

Gehen Sie wie folgt vor, um die Fräseinheit durch die Einpunkt-Werkzeugkopfeinheit zu ersetzen:

1. Die Stromzufuhr vollständig abschalten und sperren.
2. Die Fräskopfeinheit, einschließlich der Fräskopfadapterplatte, von der Querschlittenplatte entfernen (siehe Abbildung 4-38, die auch in Abbildung A-11 auf Seite 130) zu sehen ist.
3. Die Einpunkt-Werkzeugeinheit (P/N 62984) an die Querschlittenplatte befestigen.

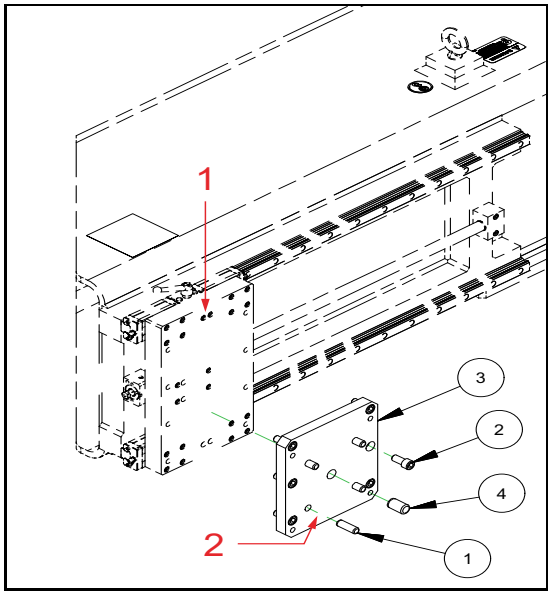

ABBILDUNG 4-29. QUERSCHLITTENPLATTE

TABELLE 4-5. IDENTIFIKATION DER QUERSCHLITTENPLATTE

Nummer	Komponente
1	Sattelplatte
2	Fräskopf-Adapterplatte

4. Die Werkzeugkopfeinheit am Adapter befestigen (siehe Abbildung 4-39, die in Abbildung A-27 auf Seite 146 zu sehen ist).

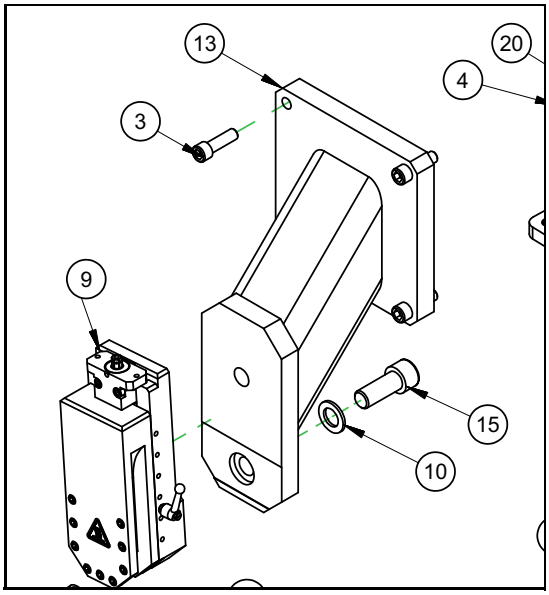

ABBILDUNG 4-30. ADAPTER WERKZEUGKOPFEINHEIT

4.3.5 Ausführung Rundfräsen

Die Bearbeitung in beide Richtungen ist mit einer Planfräse an allgemeinen Flanschen möglich. Es empfiehlt sich, einen Durchgang in eine Richtung und den nächsten in die andere Richtung zu machen.

⚠ CAUTION

Wenn die Bedingungen oder Werkzeuge erfordern, dass alle Durchläufe in dieselbe Richtung erfolgen, die Spindel am Ende jedes Durchlaufes oder jedes zweiten Durchlaufes zurückziehen und den Tisch umdrehen, um ein übermäßiges Verdrehen und Knicken von Schläuchen und elektrischen Kabeln zu vermeiden.

Gehen Sie wie folgt vor, um das Rundfräsen durchzuführen:

1. Die Spindel über dem Werkstück auf den gewünschten Startpunkt stellen.
2. Die Drehzahl des Drehtisches auf Null stellen.
3. Den Drehtisch starten und eine gewünschte Drehzahl zum Fräsen einstellen.
4. Drehtisch anhalten.
5. Die Spindel in Richtung des Werkstücks bewegen, bis der Fräser gerade die Oberfläche berührt. Anzeige zurücksetzen.
6. Spindel vom Werkstück wegführen, so dass sie nicht mehr über der zu bearbeitenden Fläche liegt.
7. Die Spindel auf die gewünschte Schnitttiefe einstellen.
8. Die Stromversorgung einschalten und die Spindeldrehung starten.
9. Den Fräser mit Hilfe des Radialachsenvorschubs radial in das Werkstück einführen.
10. Wenn sich der Fräser vollständig in das Werkstück einarbeitet, die Drehung des Drehtisches starten.

⚠ CAUTION

Niemals die Spindel anhalten bevor der Drehtisch vollständig gestoppt ist. Das Anhalten der Spindel vor dem Anhalten des Drehtisches führt zu Beschädigungen an der Maschine.

TIP:

Beim Fräsen müssen eventuell die Spannfinger entfernt werden.

⚠ DANGER

Das Entfernen der Spannfinger von der Maschine reduziert die Stabilität der Maschine. Sicherstellen, dass die Maschine gemäß den in

Abschnitt 3.4 auf Seite 25 aufgeführten Spezifikationen am Werkstück befestigt ist, bevor die Spannfinger entfernt werden.

11. Den Geschwindigkeitsregler am Bedienelement so einstellen, dass sich der Drehtisch mit der erforderlichen Geschwindigkeit dreht.

WARNING

Um sich vor Spänen zu schützen, ist bei Betrieb der Maschine Augenschutz zu tragen.

12. Um die Rotation der Maschine zu stoppen, die Stopptaste für den Drehtisch am Bedienelement drücken.
13. Schneiddurchgänge nach Bedarf wiederholen. Für sehr feine Oberflächen sollten mehrere Rohschnitte und ein Feinschliff durchgeführt werden.

Bewegen Sie den Fräser zwischen Fräsdurchgängen oder wenn alle Durchgänge abgeschlossen sind radial vom Werkstück weg.

4.4 Option Schleifen

4.4.1 Einstellung der Schleifvorrichtung

Der Schleifvorsatz verwendet den gleichen Montageadapter wie das optionale Einpunktwerkzeug. Weitere Informationen zu den zum Schleifen benötigten Teilen finden Sie in den Einzelansichten (Abbildung A-16 auf Seite 135, Abbildung A-17 auf Seite 136 oder Abbildung A-18 auf Seite 137).

Gehen Sie wie folgt vor, um die Schleifvorrichtung einzurichten:

1. Die Maschine gemäß der Montageanleitung in Abschnitt 3.4 auf Seite 25 im Flansch aufbauen.
2. Den Schleifkopf am Bearbeitungsarm montieren (siehe Abschnitt 4.5.2 auf Seite 90 für Anweisungen zum Austausch des Fräskopfes).
3. Die Schleifmaschine mit den mitgelieferten Schrauben an der Stirnseite des Werkzeugkopfes befestigen.
4. Die Schläuche vom Schleifvorsatz an die Pneumatikanlage (Pneumatic Conditioning Unit PCU) anschließen.

NOTICE

Nur maximal zwei oder drei Durchläufe in eine der Richtungen durchführen. Anschließend die Richtung umkehren, um ein Festbinden der Schläuche zu verhindern.

5. Nivellierschrauben so einstellen, dass der gewünschte Schleifwinkel erreicht wird (Abbildung 4-31).
6. Die Höheneinstellschraube am Schleifkopf verwenden, um die Höhe einzustellen.
7. Überprüfen, dass die Schutzeinrichtungen und alle Befestigungselemente richtig und fest sitzen.

ABBILDUNG 4-31. SCHLEIFKOPF-NIVELLIERSCHRAUBEN

4.4.2 Betrieb

Das Schleifen sollte durchgeführt werden, nachdem der Flansch mit einem Einpunktwerkzeug oder dem Fräskopf eben gearbeitet wurde.

1. Schleifkopf auf die gewünschte Arbeitsgeschwindigkeit hochfahren.
2. Die Spindel so einstellen, dass sie die Werkstückoberfläche berührt und leicht schleift.
3. Überprüfen Sie die Oberflächenbeschaffenheit.
4. Ggf. die erforderlichen Einstellungen an den Schleifeinstellungen vornehmen.
5. Wenn die Oberflächengüte zufriedenstellend ist, die Oberfläche wie erforderlich weiterschleifen.

⚠ WARNING

Während des Betriebs sich von der Schleifvorrichtung fernhalten. In der Umgebung der Schleifvorrichtung können Metallspäne ausgeworfen werden. Während des Betriebs der Maschine ist Augenschutz zu tragen.

6. Wenn der Schleifvorgang abgeschlossen ist, die Spindel anheben und die Schleifmaschine ausschalten.

4.5 EINPUNKT-OPTION

Wie in Abbildung 4-32 auf Seite 84 zu sehen, erfordert die Einpunkt-Option einen Adapter und eine Fräskopfanordnung sowie ein pneumatisches System zur Vorschubsteuerung. Der Adapter wird direkt an den vorhandenen Werkzeugarm montiert. Siehe auch Abbildung 4-33 auf Seite 85 und Abbildung 4-34 auf Seite 86.

Für die Hydraulikmotor-Montageeinheit siehe Abschnitt 4.5.3 auf Seite 91.

Die Pneumatikanlage PCU versorgt den pneumatischen Vorschubkasten über das Drehtischanschlussstück mit Luft.

Der Einpunkt-Werkzeughalter wird anstelle des Fräskopfes an der Sattelplatte am Dreharm montiert. Siehe Abschnitt 4.5.2 auf Seite 90.

Der pneumatische Vorschubkasten und Adapter werden am Ende der Kugelschraube am Dreharm montiert.

Das Drehtischanschlussstück wird in der Mitte des Drehtisches montiert und überträgt das Fluid auf den Hydraulikmotor und die Luft auf den Vorschubkasten. Siehe Abschnitt 4.5.3 auf Seite 91. Hier befindet sich auch das Luftventil, das den Vorschubkasten steuert.

Das Not-Aus-Verfahren ist in Abschnitt 5.2.1 auf Seite 98 beschrieben.

4.5.1 Konfigurieren des Drehtischanschlussstücks für Innen- oder Außenmontage

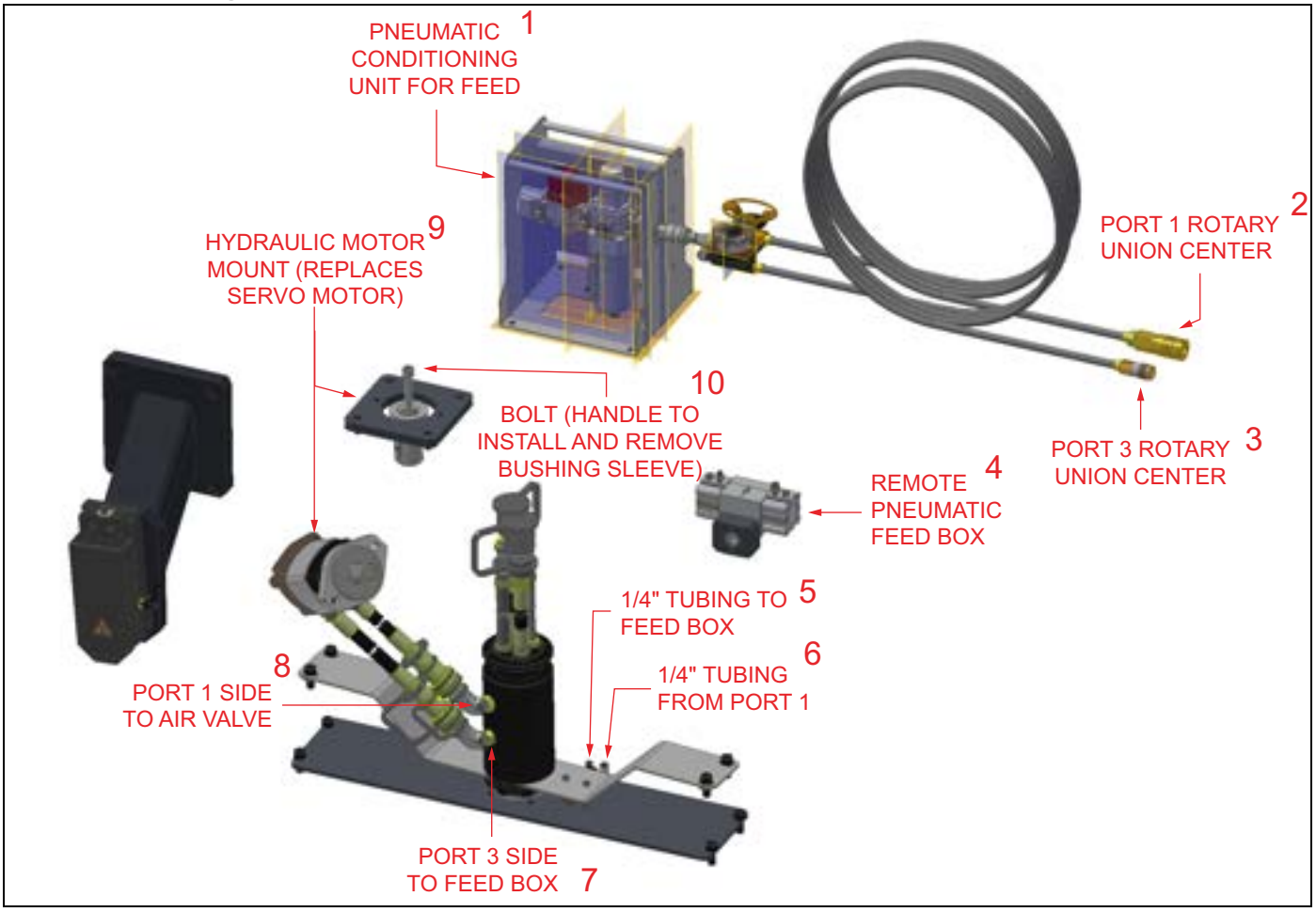

ABBILDUNG 4-32. KOMPONENTEN DER DREHDURCHFÜHRUNG

TABELLE 4-6. IDENTIFIZIERUNG KOMPONENTE DER DREHDURCHFÜHRUNG

Nummer	Komponente
1	Pneumatikanlage für Vorschub
2	Anschluss 1 Mitte des Drehtischanschlussstücks
3	Anschluss 3 Mitte des Drehtischanschlussstücks
4	Entfernter pneumatischer Vorschubkasten (siehe Abbildung 4-33 auf Seite 85 und Abbildung 4-34 auf Seite 86 für weitere Details)
5	1/4"-Rohr zum Vorschubkasten
6	1/4"-Rohr von Anschluss 1
7	Anschluss 3 Seite zum Vorschubkasten
8	Anschluss 1 Seite zum Luftventil
9	Montage des Hydraulikmotors (ersetzt den Servomotor)

TABELLE 4-6. IDENTIFIZIERUNG KOMPONENTE DER DREHDURCHFÜHRUNG

Nummer	Komponente
10	Schraube (Griff zum Einsetzen und Entfernen der Buchsenhülse)

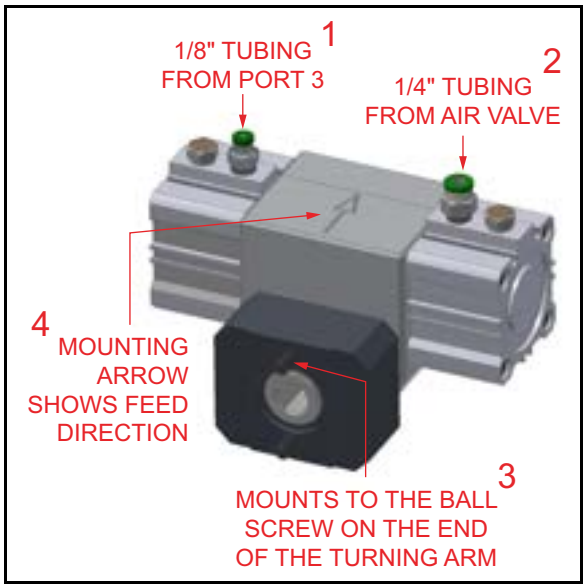

ABBILDUNG 4-33. BESCHREIBUNG VORSCHUBKASTEN

TABELLE 4-7. IDENTIFIZIERUNG BESCHREIBUNG VORSCHUBKASTEN

Nummer	Komponente
1	1/8"-Rohr von Anschluss 3
2	1/4" Rohr vom Luftventil
3	Wird an der Kugelumlaufspindel am Ende des Dreharms befestigt
4	Montagepfeil zeigt die Vorschubrichtung

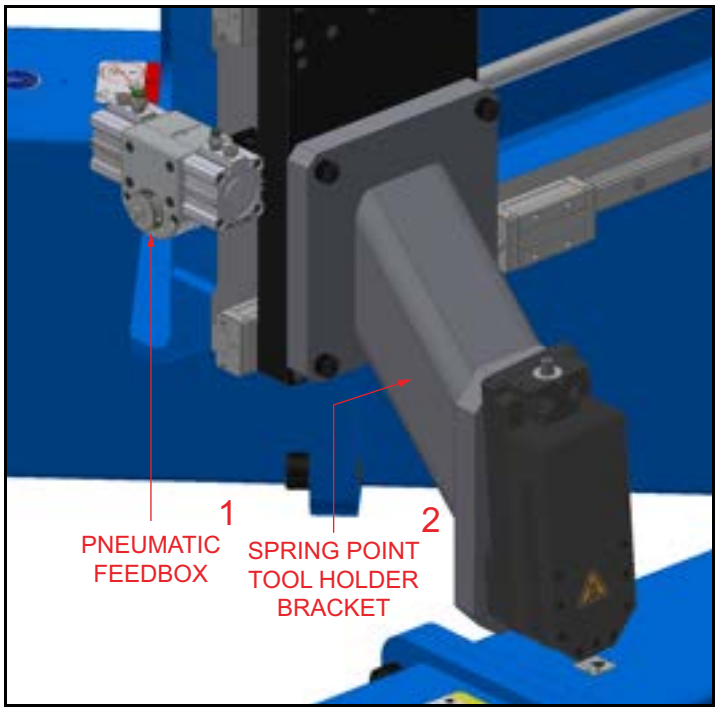

ABBILDUNG 4-34. POSITION DES PNEUMATISCHEN VORSCHUBKASTENS

TABELLE 4-8. IDENTIFIZIERUNG DES PNEUMATISCHEN VORSCHUBKASTENS

Nummer	Komponente
1	Pneumatischer Vorschubkasten
2	Werkzeughalter Federpunkt

4.5.1.1 Innenmontage-Konfiguration

Abbildung 4-35 zeigt eine Explosionszeichnung der Konfiguration der Drehdurchführung für eine Innenmontage. Siehe Abbildung A-31 auf Seite 150 zur Kennzeichnung der nummerierten Teile.

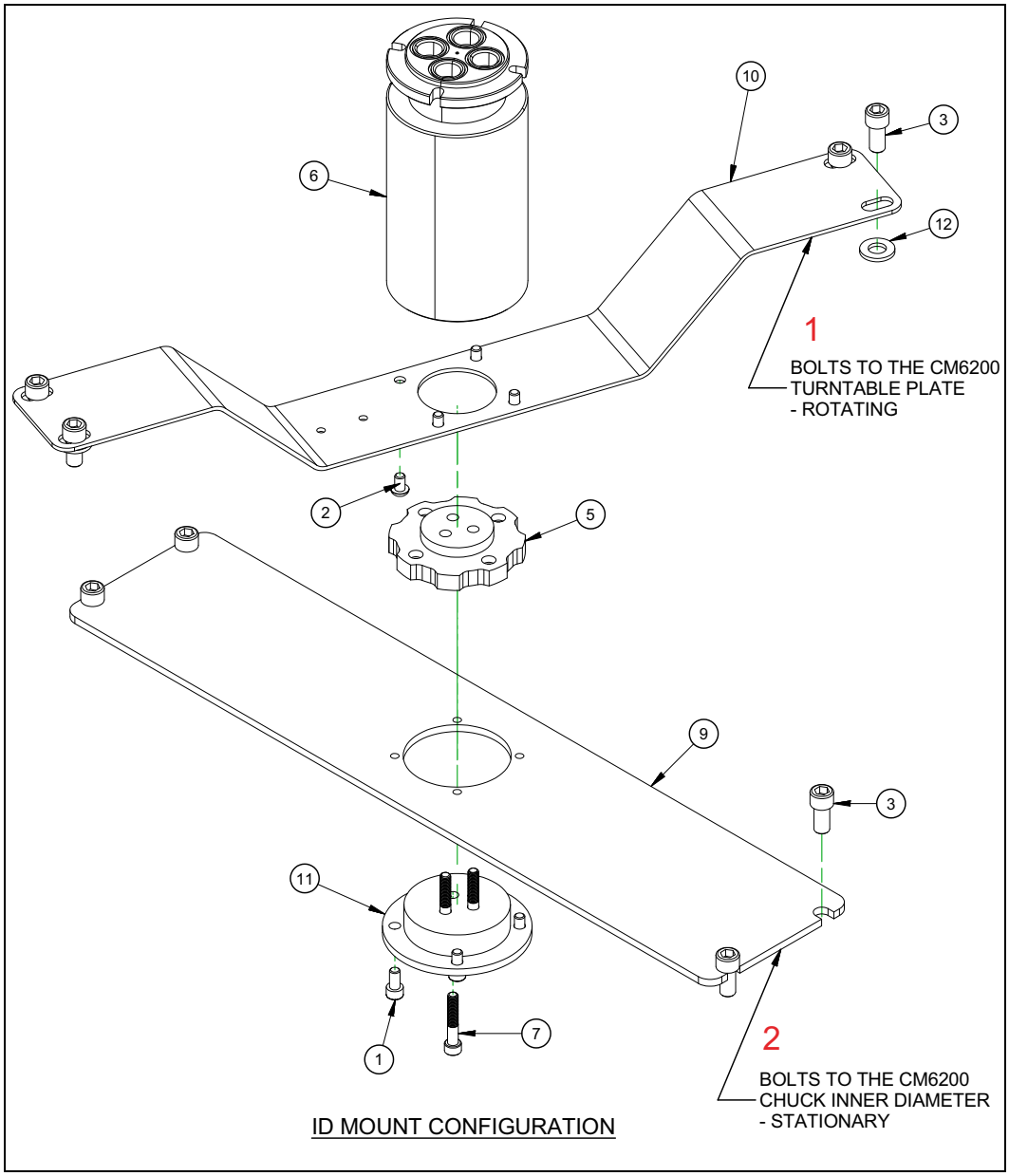

ABBILDUNG 4-35. INNENMONTAGE-KONFIGURATION DES DREHTISCHANSCHLUSSSTÜCKS

TABELLE 4-9. IDENTIFIZIERUNG INNENMONTAGE-KONFIGURATION

Nummer	Komponente
1	Schrauben an der Drehtischplatte CM6200 (drehbar)
2	Schrauben zum Innendurchmesser des Futters CM6200 (stationär)

Gehen Sie wie folgt vor, um das Drehtischanschlussstück für eine Innenmontage zu konfigurieren, und beziehen Sie sich dabei auf Abbildung 4-35:

1. Verschrauben Sie die Drehmomentstütze mit der CM6200 Drehtischplatte. Sie wird sich mit der Maschine drehen.
2. Schrauben Sie die Halterung des Drehtischanschlussstücks an den CM6200 Innendurchmesser des Futters. Sie bleibt stationär.

4.5.1.2 Außenmontage-Konfiguration

Abbildung 4-36 zeigt die Teile, die zur Konfiguration der Außenmontage des Drehtischanschlussstücks verwendet werden. Siehe Abbildung A-31 auf Seite 150 zur Teilekennzeichnung.

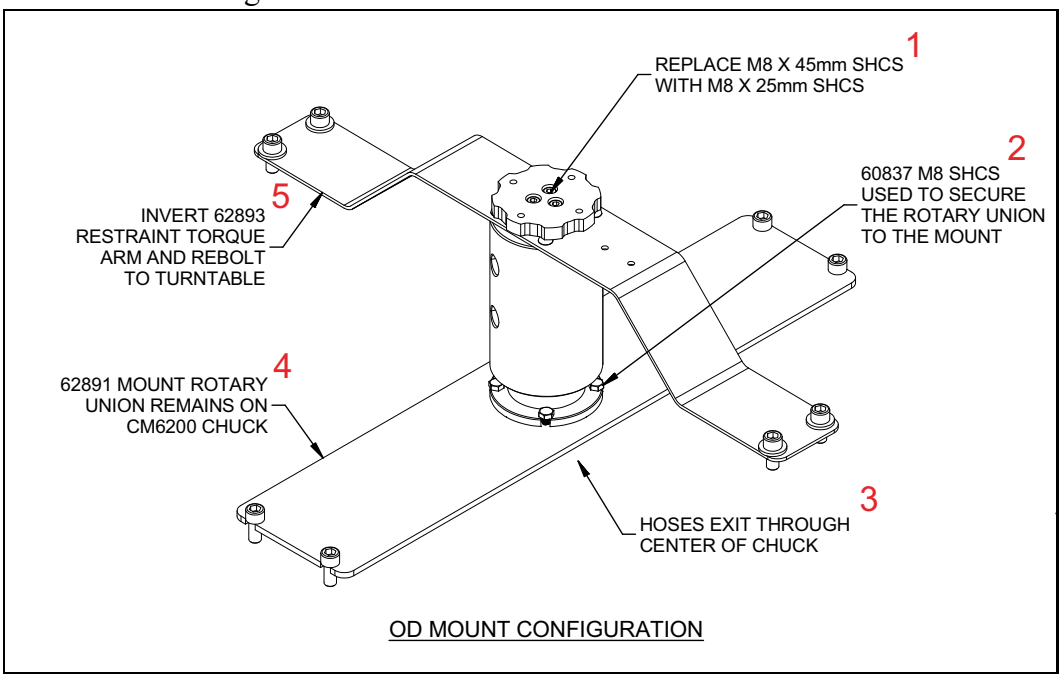

ABBILDUNG 4-36. AUßENMONTAGE-KONFIGURATION DES DREHTISCHANSCHLUSSSTÜCKS

TABELLE 4-10. IDENTIFIZIERUNG AUßENMONTAGE-KONFIGURATION

Nummer	Komponente
1	Ersetzen Sie M8 x 45 mm SHCS durch M8 x 25 mm SHCS
2	P/N 60837 M8 SHCS zur Befestigung des Drehtischanschlussstücks an der Halterung
3	Schläuche treten durch die Mitte des Spannfutters aus
4	Montage P/N 62891 Drehtischanschlussstück bleibt auf dem Spannfutter CM6200
8	Drehen Sie die Drehmomentstütze P/N 62893 um und schrauben Sie sie wieder an den Drehtisch

Gehen Sie wie folgt vor, um das Drehtischanschlussstück für eine Innenmontage zu konfigurieren, und beziehen Sie sich dabei auf Abbildung 4-37:

1. Ersetzen Sie die M8 x 45 mm SHCS durch M8 x 25 mm SHCS. Behalten Sie dieselbe Nocke an ihrem Platz.
2. Drehen Sie die Drehmomentstütze um und schrauben Sie sie wieder an den Drehtisch.
3. Befestigen Sie das Drehtischanschlussstück mit den M8 SHCS (P/N 55799) an der Halterung. Die Halterung des Drehtischanschlussstücks verbleibt auf dem CM6200 Spannfutter.

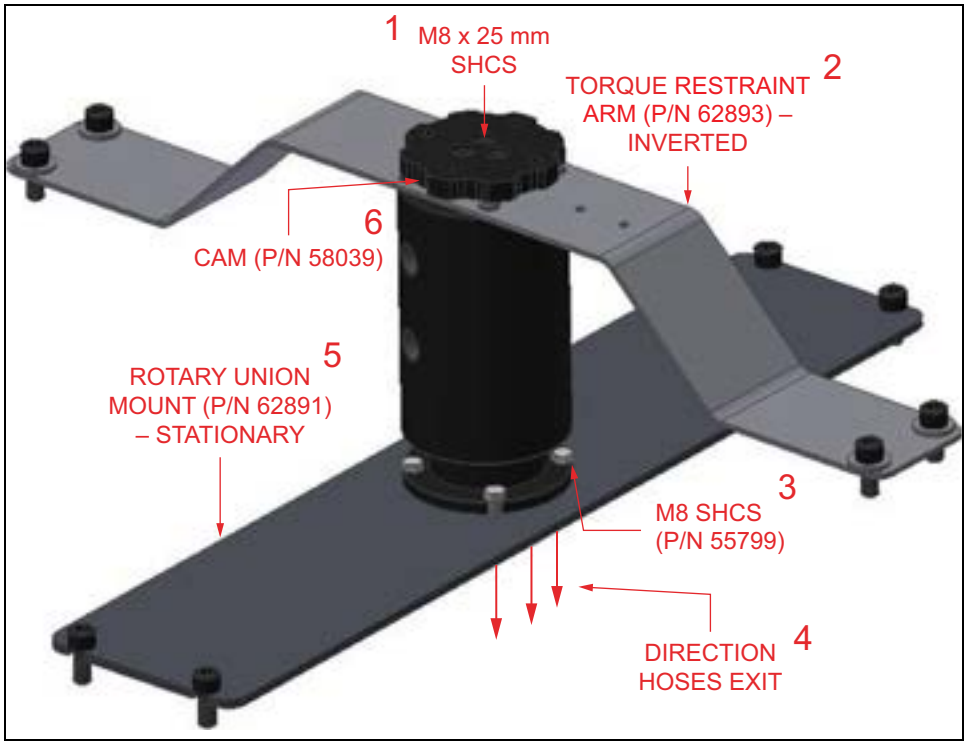

ABBILDUNG 4-37. AUßENMONTAGE-KONFIGURATION DREHTISCHANSCHLUSSSTÜCK

TABELLE 4-11. AUßENMONTAGE IDENTIFIZIERUNG KOMPONENTE DER DREHDURCHFÜHRUNG

Nummer	Komponente
1	M8 x 25 mm Zylinderschraube mit Innensechskant (SHCS)
2	Drehmomentstütze (P/N 62893) – umgedreht
3	M8 SHCS (P/N 55799)
4	Richtung, in der die Schläuche austreten
5	Montage Drehtischanschlussstück (P/N 62891) – stationär
6	Nocke (P/N 58039)

4.5.2 Austausch der Fräseinheit

Gehen Sie wie folgt vor, um die Fräseinheit durch die Einpunkt-Werkzeugkopfeinheit zu ersetzen:

1. Die Stromzufuhr vollständig abschalten und sperren.
2. Die Fräskopfeinheit, einschließlich der Fräskopfadapterplatte, von der Querschlittenplatte entfernen (siehe Abbildung 4-38, die auch in Abbildung A-11 auf Seite 130) zu sehen ist.
3. Die Einpunkt-Werkzeugeinheit (P/N 62984) an die Querschlittenplatte befestigen.

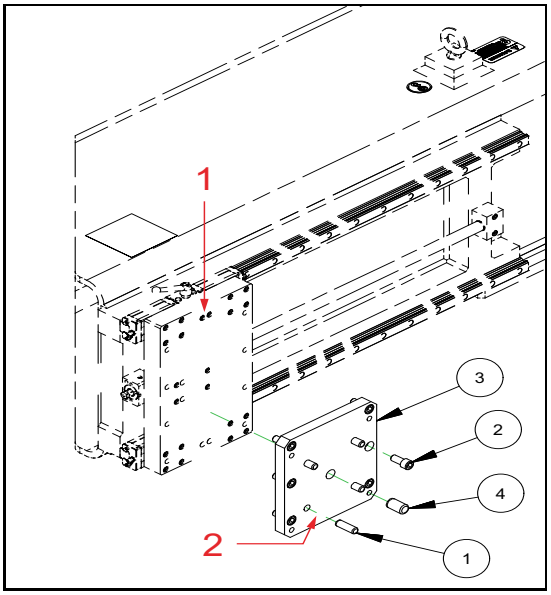

ABBILDUNG 4-38. QUERSCHLITTENPLATTE

TABELLE 4-12. IDENTIFIKATION DER QUERSCHLITTENPLATTE

Nummer	Komponente
1	Sattelplatte
2	Fräskopf-Adapterplatte

4. Die Werkzeugkopfeinheit am Adapter befestigen (siehe Abbildung 4-39, die in Abbildung A-27 auf Seite 146 zu sehen ist).

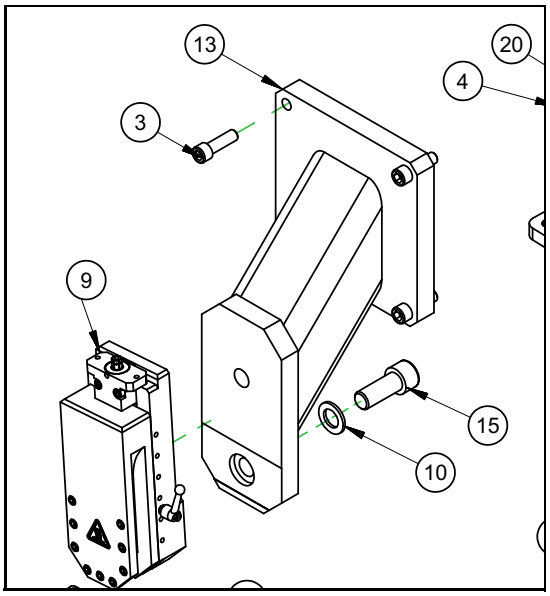

ABBILDUNG 4-39. ADAPTER WERKZEUGKOPFEINHEIT

4.5.3 Installation des Hydraulikantriebs in der Einpunktkonfiguration

Gehen Sie wie folgt vor, um den Hydraulikantrieb in der Einpunktkonfiguration für Flansche einzurichten:

1. Die Stromzufuhr vollständig abschalten und sperren.
2. Den Servomotor und das Planetengetriebe entfernen (siehe Abbildung 4-40).
3. Den Hydraulikmotor mit einer Adapterantriebswelle und Adapterplatte auf das Hauptringritzel montieren. Bei der Auswahl der Motorgröße siehe Tabelle 2-1 auf Seite 13 für die Drehzahlen von Hydraulikmotoren.

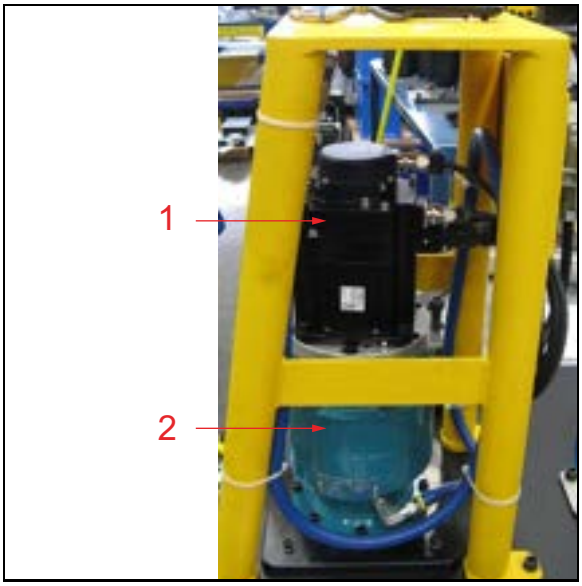

ABBILDUNG 4-40. SERVOMOTOR UND GETRIEBE

TABELLE 4-13. IDENTIFIKATION VON SERVOMOTOR UND GETRIEBE

Nummer	Komponente
1	Servomotor
2	Getriebe

4. Drehtischanschlussstück an die Maschine montieren (siehe Abbildung 4-41).
5. Schläuche von der HPE und Pneumatikanlage zum Drehtischanschlussstück und von dort zum Hydraulikmotor und zum pneumatischen Vorschubkasten führen (siehe die Abbildungen in Abschnitt 4.5.1 auf Seite 84).

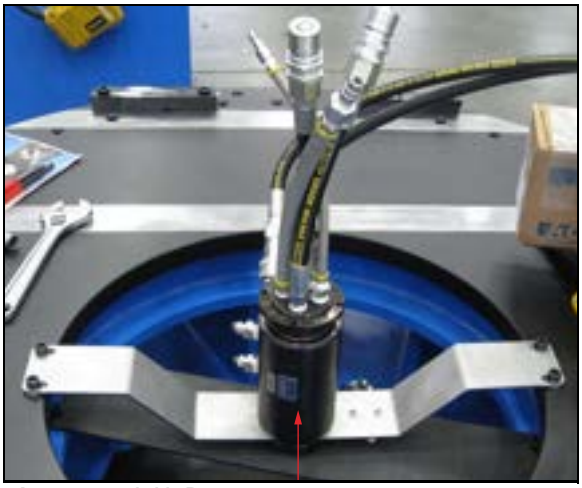
ABBILDUNG 4-41. DREHTISCHANSCHLUSSSTÜCK

NOTICE

Der Servomotor muss an die HPE angeschlossen sein — aber nicht an die Maschine. Es besteht die Gefahr, dass der Servoantrieb beschädigt wird, wenn der Motor bei eingeschalteter HPE abgeklemmt wird.

Siehe Abschnitt 4.5 auf Seite 83 für die Installation des pneumatischen Vorschubkastens und der Adapterplatte am Ende des Fräsarms.

4.5.4 Installation des Vorschubkastens

Der pneumatische Vorschubkastens ist mit einer Fernverstellung des Vorschubkastens am Luftabsperrventil ausgestattet. Alle Einstellungen am Vorschub werden von hier aus vorgenommen. Die Druckluftzufuhrleitungen zum Vorschubkasten werden in zwei Größen geliefert: 6,35 mm (0,25") und 3,175 mm (0,125"). Dies verhindert ein versehentliches Vertauschen der Schläuche.

Gehen Sie wie folgt vor, um den Vorschubkasten zu installieren:

1. Die Adapterbaugruppe für den Vorschubkasten (P/N 62994, siehe Abbildung 4-42) durch Verschrauben mit den beiden M6x1,0 x 30 mm Zylinderschrauben am Ende des Dreharms installieren.
2. Die pneumatische Vorschubkastenbaugruppe (Art.-Nr. 58671) durch Verschrauben mit den beiden M6x1,0 x 60 mm Zylinderschrauben auf der Vorschubkasten-Adapterbaugruppe installieren.

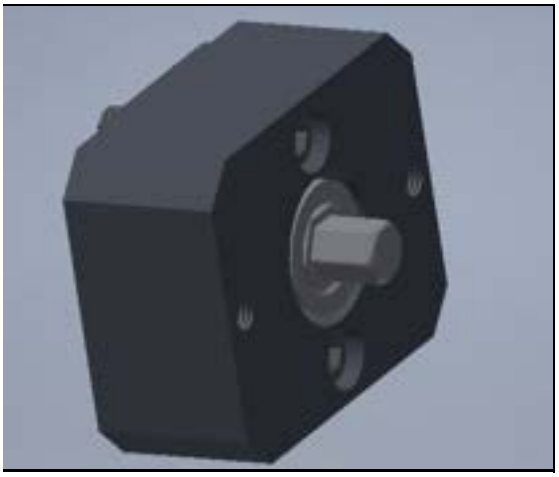

ABBILDUNG 4-42. PNEUMATISCHER VORSCHUBKASTEN UND ADAPTER

Bei der Montage ist darauf zu achten, dass der Pfeil in die vorgesehene Vorschubrichtung zeigt (siehe Abbildung 4-43).

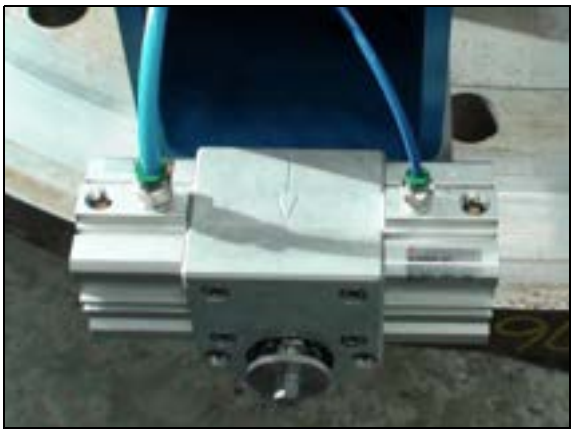

ABBILDUNG 4-43. EINZUGSRICHTUNG DES VORSCHUBKASTENS

4.5.5 Umkehren der Vorschubrichtung

Der Vorschub des Vorschubkastens erfolgt ohne Umstellung immer nur in eine Richtung.

Gehen Sie wie folgt vor, um die Vorschubrichtung umzukehren:

1. Die Förderwelle und die zwei Schrauben entfernen, die die Förderwelle mit dem Arm verbinden (Abbildung 4-44).

ABBILDUNG 4-44. ENTFERNEN DER SCHRAUBEN IN GEGEN-LAUFRICHTUNG

TIP:

Das Trennen und Vertauschen der Schläuche führt NICHT zur Umkehrung der Vorschubrichtung.

2. Die Vorschubbox drehen, bis der Pfeil in die gewünschte Vorschubrichtung zeigt.
3. Schrauben und Förderwelle wieder installieren.

Dieser Vorschubkasten verfügt, wie in Abbildung 4-45 gezeigt, über zwei Modi, aktiviert und deaktiviert (neutral).

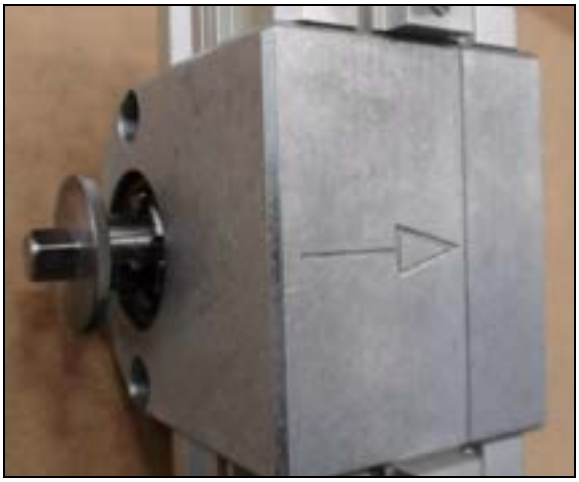

ABBILDUNG 4-45. VORSCHUBRICHTUNGSPFEIL

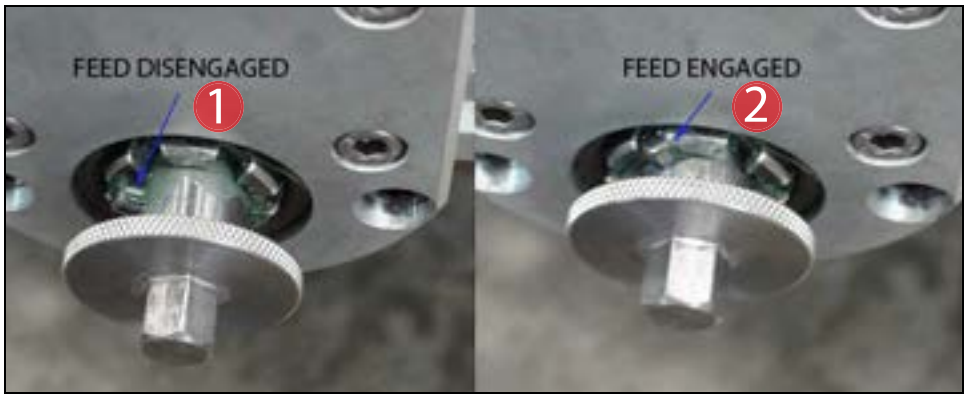

ABBILDUNG 4-46. POSITIONEN DER VORSCHUBKASTENMODI

TABELLE 4-14. IDENTIFIZIERUNG VORSCHUBKASTENMODUS

Nummer	Komponente
1	Vorschub ausgekup-pelt
2	Vorschub einges-chaltet

Im neutralen Modus kann das Werkzeug manuell in beide Richtungen bewegt werden. Schläuche, die an der Vorschubbox angeschlossen sind, sollten eine zusätzliche Länge von etwa 304,8 mm (12") haben, die im Inneren des Arms geführt werden und die Bewegung des Arms ohne Hängenbleiben unterstützen.

Um die Förderschläuche zu trennen, jeweils den Ring um den Schlauch nach unten drücken und den Schlauch herausziehen.

ABBILDUNG 4-47. VERFAHREN ZUM TRENNEN DER FÖRDER SCHLÄUCHE

4.5.6 Betrieb des pneumatischen Vorschubsystems

Gehen Sie wie folgt vor, um das pneumatische Vorschubsystem zu betreiben:

1. Schließen Sie die Energiequellen an.

TABELLE 4-15. IDENTIFIZIERUNG VENTILE DER PNEUMATIKANLAGE

Nummer	Komponente
1	Ventil für Vorschub ein/aus
2	Drehzahlregelventil
3	Vorschubeinstellung

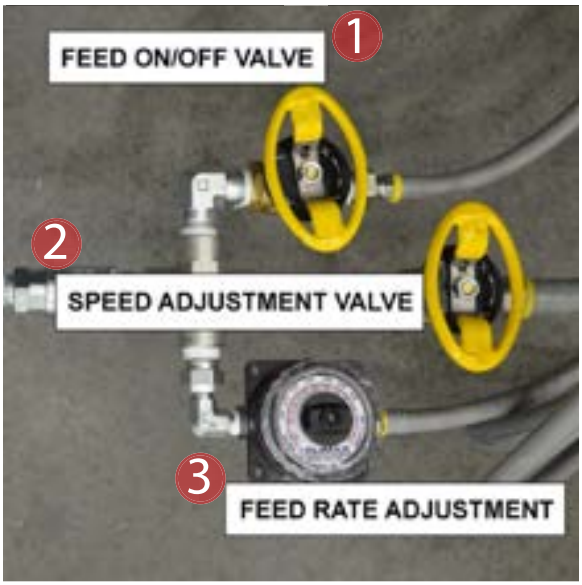

ABBILDUNG 4-48. VENTILE DER PNEUMATIKANLAGE

2. Die START-Taste der Pneumatikanlage drücken.
3. Um die Umdrehungen pro Minute (U/Min.) der Drehscheibe einzustellen, schalten Sie den Antriebsmotor mit dem Drehzahlventil ein.
4. Um den Vorschub pro Umdrehung einzustellen, drehen Sie das Einstellrad für die Vorschubgeschwindigkeit auf den minimalen Vorschub oder auf die gewünschte Einstellung, falls bekannt.
5. Schalten Sie den Vorschub mit dem Ein/Aus-Ventil ein und stellen Sie den Vorschub für den gewünschten Schnitt ein.

NOTICE

Drehen Sie das Ein/Aus-Ventil voll auf, um den Vorschub zu aktivieren oder zu deaktivieren.

6. Das Drehzahlverstellventil verwenden, um den Antriebsmotor so einzustellen, dass der gewünschte Schnitt erreicht wird.
7. Wenn der Schnitt abgeschlossen ist, ist zuerst der Vorschub und danach die Maschinenrotation anzuhalten.

⚠ WARNING

Zur Vermeidung schwerer Verletzungen darf während des Betriebs nicht in den Schwenkbereich des Fräsarms gegriffen werden.

4.5.7 Einstellen der Schnittcharakteristik

Gehen Sie wie folgt vor, um die Schnitteigenschaften anzupassen:

1. Wenn der Schnitt beendet ist, den Vorschub und die Maschine anhalten.
2. Die Maschine muss verriegelt sein, bevor die Werkzeuge gewechselt oder Einstellungen an der Maschine vorgenommen werden.
3. Die Maschinenrichtung, Schnitttiefe und Werkzeugposition nach Bedarf einstellen.
4. Die Maschine und den Vorschub erneut starten, um einen neuen Schnitt nach Bedarf zu starten.
5. Wiederholen, bis die geforderte Oberflächengüte erreicht ist.

⚠ WARNING

Zur Vermeidung schwerer Verletzungen darf während des Betriebs nicht in den Schwenkbereich des Fräsarms gegriffen werden.

4.6 AUSBAU

⚠ WARNING

Wenn diese Maschine nicht ordnungsgemäß gesichert ist, kann sie herunterfallen und zu tödlichen Verletzungen führen. Seien Sie bei vertikalen Flanschinstallationen besonders vorsichtig.

Die Maschine muss vor Beginn der Demontagearbeiten ordnungsgemäß aufgetakelt und an einem Kran oder einer anderen geeigneten Hebevorrichtung befestigt sein. Als Vorsichtsmaßnahme eine zweite Takelung verwenden.

Gehen Sie wie folgt vor, um die Maschine zu demontieren:

1. Den Tisch und den Fräsarm in die richtigen Hebeposition positionieren.
2. Die Stromzufuhr vollständig abschalten und die Hydraulikanlage verriegeln.
3. Die Spindel einfahren und den Fräser von der Spindel entfernen.
4. Die Netzkabel und Hydraulikschläuche von den Energiequellen trennen.
5. Alle Spannfinger, die entfernt wurden, wieder anbringen.
6. Die Maschine auf die gleiche Weise takeln, wie sie installiert wurde (siehe Abschnitt 3.3 auf Seite 22).

7. Den Schlauchturm in die Verstauposition bringen (siehe Abbildung 4-49).
8. Maschine mit einem Hebezeug abstützen.
9. Dann die Abdrückschrauben lösen. Wenn die Maschine in der vertikalen oder geneigten Position ist, den unteren Stapelbolzen in Position belassen, aber die anderen Abdrückschrauben lösen. Dies verhindert das Umfallen der Maschine, wenn alle anderen Stützfüße gelöst werden.
10. Die Maschine mit einem Hebezeug vom Werkstück abheben.

ABBILDUNG 4-49. SCHLAUCHTURM IN VERSTAUPOSITION

Zur Lagerung der Maschine finden Sie unter Abschnitt 6 weitere Informationen.

Diese Seite bleibt leer

5 WARTUNG UND FEHLERBEHEBUNG

IN DIESEM KAPITEL:

5.1 WARTUNGSABSTÄNDE

⚠ CAUTION

Unzureichende Reinigung und Wartung der Maschine kann zu Maschinenschäden und zum Erlöschen der Garantie führen. Späne sind stets von beweglichen Maschinenteilen fernzuhalten.

Die Einhaltung des in Tabelle 5-1 auf Seite 98 beschriebenen Wartungsplans ist entscheidend für die reguläre Lebensdauer der Maschine. Halten Sie alle Maschinenkomponenten in einem sauberen Betriebszustand.

Überprüfen Sie, dass Teile wie Montageflächen, Hydraulikanschlüsse und Werkzeuge frei von Metallspänen, Kerben oder Graten sind. Zur Vermeidung von Korrosion sollten Maschinenteile, die Salzwasser ausgesetzt sind, gründlich mit frischem, klarem Wasser gespült werden.

TABELLE 5-1. WARTUNGSABSTÄNDE UND -AUFGABEN

Intervall	Arbeit	Siehe Abschnitt
Vor jedem Gebrauch	Überprüfung des Notaus-Schalters der Pneumatikanlage.	5.2.1
	Überprüfung der Ausfallsicherung der Pneumatikanlage.	5.2.2
Vor und nach jedem Gebrauch	Entfernen Sie Späne von Rundlager, Getriebehalterung und Radialschlitten.	5.2
Nach jedem Gebrauch	Die Maschine mit sauberen, trockenen Lappen abwischen.	--
	Schmutz und Feuchtigkeit von der Maschinenoberfläche entfernen.	--
Alle fünf Jahre	Wechseln Sie die Batterie in der SPS.	

5.2 WARTUNGSAUFGABEN

5.2.1 Überprüfung des Notaus-Schalters der Pneumatikanlage

Überprüfen Sie vor jedem Gebrauch den Notaus, indem Sie wie folgt vorgehen:

1. Bei laufender Maschine die Notaus-Taste drücken (siehe Abbildung 4-11 auf Seite 61).
2. Überprüfen, dass die Maschine stoppt.
3. Den Not-Stopp-Taster durch Ziehen des Knopfes nach oben zurücksetzen.

Wenn die Maschine ohne Eingriff des Bedienpersonals sofort wieder anläuft, die Notaus-Taste erneut drücken. In diesem Fall die Nutzung der Maschine einstellen und sich an CLIMAX wenden.

5.2.2 Überprüfung der Ausfallsicherung der Pneumatikanlage

Der Ausfallstromkreis der Pneumatikanlage verhindert ein unerwartetes Wiederanlaufen der Maschine, nachdem die Druckluftzufuhr zur Pneumatikanlage erst unterbrochen und dann wiederhergestellt wurde.

Gehen Sie wie folgt vor, um die Ausfallsicherung der Pneumatikanlage zu überprüfen:

1. Überprüfen, dass die Pneumatikanlage an eine Druckluftzufuhr und an die CM6200 angeschlossen ist.
2. Überprüfen, dass die Verriegelung der Druckluftzufuhr geöffnet (hochgezogen) ist.
3. Drücken Sie die START-Taste.
4. Das Drehzahlverstellventil der PCU langsam öffnen, bis der Drehantrieb einrastet.

5. Schließen des Absperrventils (nach unten drücken).
6. Überprüfen, dass die Maschine stoppt.
7. Absperrventil öffnen.

Wenn die Maschine ohne Eingriff des Bedienpersonals sofort wieder anläuft, die Notaus-Taste drücken. In diesem Fall die Nutzung der Maschine einstellen und sich an CLIMAX wenden.

5.2.3 Wartung des Drehtischs und der Antriebsbaugruppe

Vor und nach Betrieb der CM6200, Späne von Rundlager, Getriebehalterung und Radialschlitten wegwischen oder absaugen. CLIMAX empfiehlt nicht die Verwendung von Druckluft zur Reinigung des Bereichs der Linearführung oder der Dichtungen.

Die Hauptlager und das Untersetzungsgetriebe sind bei normalem Gebrauch auf Lebensdauer geschmiert.

5.2.4 Wechseln der SPS-Batterie

NOTICE

Die speicherprogrammierbare Steuerung (SPS) im CM6200-Steuerungssystem verwendet eine Batterie, um das Programm aufrechtzuerhalten, wenn die Netzspannung abgeschaltet ist. Diese Batterie muss regelmäßig ausgetauscht werden, da sonst das SPS-Programm verloren geht und die Maschine nicht funktioniert, bis das SPS-Programm wiederhergestellt wurde. Um ein unerwartetes Abschalten der Steuerung CM6200 zu vermeiden, ist es wichtig, dass die Batterie regelmäßig ausgetauscht wird.

Die Lebensdauer der Batterie beträgt ca. fünf Jahre, variiert jedoch je nach Temperatur, bei der das Gerät betrieben und gelagert wird (siehe Abbildung 5-1).

Battery life & replacement guidelines

FX3U-32BL battery life : Approx. 5 years (ambient temperature : 25°C(77°F))
The life of the battery changes with respect to ambient temperature.
When planning for battery replacement, please estimate the battery life according to the graph to the right and order replacement batteries in advance.

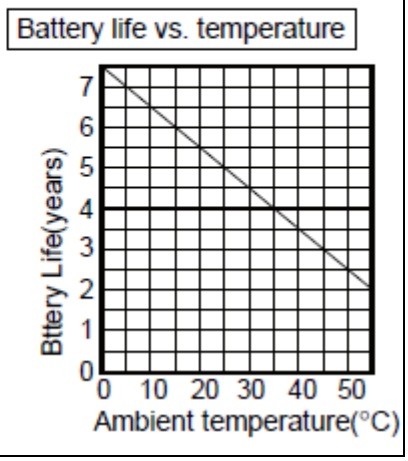

ABBILDUNG 5-1. SPS-BATTERIE-SPEZIFIKATION

5.2.5 Einstellungen der Schleppbremse

Die Widerstandsbremse der CM6200 ist regelmäßig auf ihre korrekte Einstellung zu überprüfen. Diese Einstellungsüberprüfung ist erst nach einer Wartung oder wenn sich die Maschine ruckartig bewegt, erforderlich.

Die Schleppbremse ist zur Eliminierung des Getriebespiels bestimmt, hauptsächlich für vertikale Anwendungen oder spezielle Werkzeuge.

ABBILDUNG 5-2. DRAUFSICHT DER SCHLEPPBREMSE

Abbildung 5-2 und Abbildung 5-3 zeigen die Position der Schleppbremse auf dem Drehtisch.

Das System wendet Widerstand gegen das Getriebe an, um Spiel zu reduzieren und die konstante Geschwindigkeit bei vertikalen und speziellen Werkzeuganwendungen zu gewährleisten.

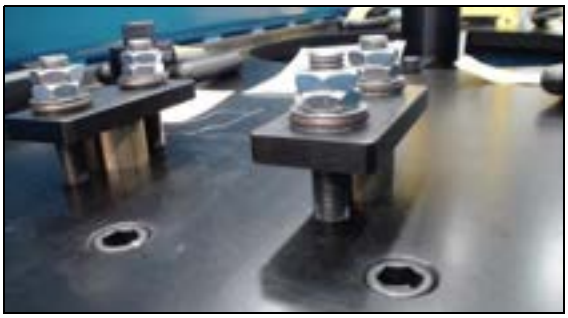

ABBILDUNG 5-3. SEITENANSICHT DER SCHLEPPBREMSE

5.2.6 Einstellung der Schleppbremse

Für vertikale Anwendungen gehen Sie wie folgt vor, um die Schleppbremse einzustellen:

1. Die Stromzufuhr vollständig abschalten und verriegeln.
2. Um die Bremse einzustellen, die Maschine so positionieren, dass sich der Drehtisch in horizontaler und ebener Position befindet.
3. Den Motor entnehmen.

CAUTION

Den Motor nur entnehmen, wenn die Maschine horizontal steht und alle rotierenden Teile blockiert sind, da sich die Nabe ohne Motor frei drehen kann.

4. Die Schleppbremse durch Zurückdrehen der Muttern vollständig lösen.

DANGER

Entfernen Sie die Schauben nicht, wenn sich die Maschine nicht in der horizontalen Position befindet, da eine unerwartete Bewegung des CM6200-Drehtisches zu schweren und tödlichen Verletzungen führen kann.

5. Vorsichtig und langsam alle Maschinenblöcke loslösen.
6. Die Spannung der Nabe ohne Schleppbremse mit einem Drehmomentschlüssel in der Ritzelnut überprüfen: Er sollte etwa 0,452 Nm (4 in-lbs) anzeigen, ohne dass die Schleppbremse angezogen ist.
7. Um die Bremse anzuziehen, die Muttern langsam anziehen und das Drehmoment prüfen, bis ein zusätzliches Drehmoment von 0,452-0,565 Nm (4-5 in-lbs) vorhanden ist, wenn die Nabe manuell gedreht wird.
8. Den Motor für die erforderte Fräsanwendung installieren.

CAUTION

Die Zwischenräume zwischen feststehenden Bauteilen und Schlitten frei von Spänen und Ablagerungen halten, damit sich die Maschine frei bewegen kann.

Horizontales Einzelpunktbearbeitungen oder Fräsanwendungen

Die Schleppbremse muss bei der Einzelpunkt-Option gelöst sein. Es gibt jedoch Situationen, in denen die Schleppbremse angezogen sein muss, z.B. beim Fräsen in jeder Position.

1. Die Stromzufuhr vollständig abschalten und verriegeln.

2. Die Maschine so positionieren, dass sich die obere Plattenoberfläche in einer horizontalen, ebenen Lage befindet.
3. Den Motor entnehmen.

CAUTION

Den Motor nur entnehmen, wenn die Maschine horizontal steht und alle rotierenden Teile blockiert sind. Durch Entnahme des Motors kann sich die Nabe frei drehen.

4. Die Schleppbremse durch Zurückdrehen der Muttern vollständig lösen.

DANGER

Entfernen Sie die Schauben nicht, wenn sich die Maschine nicht in der horizontalen Position befindet, da eine unerwartete Bewegung des CM6200-Drehtisches zu schweren und tödlichen Verletzungen führen kann.

5. Vorsichtig und langsam alle Maschinenblöcke loslösen.
6. Die Spannung der Nabe ohne Schleppbremse mit einem Drehmomentschlüssel in der Ritzelnut überprüfen: Er sollte etwa 0,452 Nm (4 in-lbs) anzeigen, ohne dass die Schleppbremse angezogen ist.
7. Beim manuellen Drehen der Maschine in die horizontale Position sollte ein Drehmoment von etwa 0,452 Nm (4 in-lbs) angezeigt werden, ohne dass die Bremse angezogen ist. Dies wird am Motorgetriebe mit einem Drehmomentschlüssel in der Passfedernut nachgeprüft.
8. Die Kontermuttern auf der Oberseite der Schleppbremse anziehen, um die Schleppbremse in Position zu halten und zu verhindern, dass sich die Kontermuttern lösen.
9. Den Motor für die erforderte Fräsanwendung installieren.

5.3 EMPFOHLENE SCHMIERSTOFFE

CLIMAX empfiehlt die Verwendung der folgenden Schmierstoffe zur Pflege der angegebenen Stellen. Die Nichtbeachtung der Verwendung der angegebenen Schmierstoffe kann zu Schäden und vorzeitigem Maschinenverschleiß führen.

⚠ CAUTION

Vermeiden Sie Schäden, vorzeitigen Maschinenverschleiß und schützen Sie Ihre Garantie, indem Sie nur zugelassene Schmierstoffe verwenden.

TABELLE 5-2. ZUGELASSENE SCHMIERSTOFFE

Anwendungs-bereich	Schmierstoff	Biologisch abbau-barer Schmierst-off	Viskosität (cSt)	Menge	Häufigkeit
Oft					
Schneidew-erkzeug	AW 32	CONOCO Eco-terra 32	32 bei 40 °C 544 bei 100 °C	Nach Bedarf	Kontinuierlicher Gebrauch während des Schneidens
Täglich					
Fräskopfgetriebe	Mobilith SHC 460	N.Z.	414 bei 40 °C 47 bei 100 °C	5 ccm	Alle 8 Betriebsstun-den
Schwalben-schwanzführung[a]	AW 32	CONOCO Eco-terra 32	32 bei 40 °C 544 bei 100 °C	Nach Bedarf	Täglich bei Maschineneinsatz
Unlackierte Ober-flächen	LPS1 oder LPS2	N.Z.	38 bei 25 °C	Nach Bedarf	Während des Maschinenbetriebs täglich, sowie vor der Lagerung
Bei jeder Nutzung					
Hydraulikeinheit	CASTROL Hyspin AWS-46 (Som-mer)	CASTROL BioBar 46 (Sommer); 32 (Winter)	46 bei 40 °C 682 bei 100 °C	Nach Bedarf, um den Behälter bis zum mittleren Schauglasniv-eau zu füllen	Bei jedem Ver-brauch nachfüllen Ölwechsel alle 2 Jahre[b]
	AWS-32 (Winter)		32 bei 40 °C 544 bei 100 °C		
Eisenberger Kugelschrauben	CONOCO Poly-Tac EP [c]	CASTROL BioTac EP 2	129 bei 40 °C 116 bei 100 °C	1 ccm pro Mutter	Einmalig pro Betrieb oder wöchentlich bei weiterer Ver-wendung
	Microlube GBU-Y 131	N.Z.	130 bei 40 °C 15 bei 100 °C		

TABELLE 5-2. ZUGELASSENE SCHMIERSTOFFE

Anwendungs-bereich	Schmierstoff	Biologisch abbau-barer Schmierst-off	Viskosität (cSt)	Menge	Häufigkeit
Linearschiene	THK-Schiene – THK AFA Grease2	N.Z.	32 bei 40 °C	2 ccm pro Lagerblock	Einmalig pro Betrieb oder wöchentlich bei weiterer Ver-wendung
	CONOCO Poly-Tac EP 2	CASTROL BioTac EP 2	129 bei 40 °C 116 bei 100 °C		
Wöchentlich					
APU	AW 32	N.Z.	22-68 bei 40 °C 4,3-8,7 bei 100 °C	Öl-Schmierst-offgeber nachfüllen	Bei jeder Nutzung
Leitspindel am Einpunkt-Werkze-ugkopf	-NOOK E-100 Sprühschmierstoff -NOOK PAG-1 Fett	CASTROL BioTac EP 2	96 bei 40 °C 113 bei 100 °C	Leichte Bes-chichtung per Hand oder aufgesprüht	Wöchentlich bei Maschineneinsatz
Spannfutter-schrauben	Molybdän-Schmiermittel	N.Z.	N.Z.	1 cm^3 pro Schraube	Während des Maschinenbetriebs wöchentlich, sowie vor der Lagerung
Jährlich					
Drehtisch und Antriebsbau-gruppe[d]	CONOCO Poly-Tac EP 2	CASTROL BioTac EP 2	129 bei 40 °C 116 bei 100 °C	20 ccm	Einmal pro Jahr
ID-Abstreiferdich-tung am Drehtisch	3M Silikonpaste 051135-08946	N.Z.	N.Z.	3 ccm	Einmal pro Jahr
Haupttisch Unter-setzungsgetriebe	Mobil 629 Getrie-beöl	N.Z.	150 bei 40 °C 158 bei 100 °C	N.Z.	Geschmiert für die Lebensdauer bei normalem Geb-rauch
Elektrische Motoren	Siehe Herstellerlit-eratur	N.Z.	N.Z.	Siehe Her-stellerliteratur	Siehe Herstellerliter-atur

a. Verwenden Sie ein stark anti-korrosives, raffiniertes Mineral- oder Synthetiköl, das einen starken Ölfilm bildet und nicht leicht emulgiert oder sich durch Kühlmittel abwaschen lässt. Hydrauliköle sind in der Regel nicht für die Führungsschmierung geeignet.

b. Beim Wechsel von Hydrauliköl immer auch Hydraulikfilter erneuern. Gehen Sie niemals davon aus, dass Öl in den Fässern sauber ist. Pumpen Sie Öl beim Befüllen des Maschinenbehälters stets durch einen 5 µm Hydraulikfilter.

c. Die Verwendung anderer Schmierstoffe auf THK-Produkten führt zum Erlöschen der Herstellergarantie.

d. Obgleich lithiumbasiertes Fett verwendet werden kann, ermöglicht ein kalziumbasiertes Fett eine höhere Schmierfähigkeit bei gleichzeitiger Aufnahme höherer Wassermengen (üblich bei transportablen Werkzeugmaschinen).

TIP:

Falls kein zugelassener Schmierstoff verwendet werden kann, wenden Sie sich an CLIMAX für eine gleichwertige Alternative.

CAUTION

Das auf der ID-Abstreiferdichtung verwendete Schmiermittel sollte 3M Silikonpaste P/N 051135-08946 oder gleichwertig sein. Es dürfen keine anderen Schmierstoffe auf dieser Dichtung verwendet werden.

5.3.1 Hauptzahnkranzschmierung

TIP:

Das Hauptzahnkranz sollte jährlich geschmiert werden. Der Zahnkranz muss geschmiert werden, während sich der Tisch langsam dreht.

DANGER

Entfernen Sie den Motor nicht, wenn sich die Maschine nicht in der horizontalen Position befindet, da eine unerwartete Bewegung des CM6200-Drehtisches zu schweren und tödlichen Verletzungen führen kann.

Gehen Sie unter Bezug auf Abbildung A-1 auf Seite 120 wie folgt vor, um den Hauptzahnkranz zu schmieren:

1. Den Encoderschutz entfernen.
2. Servomotor-Getriebe und Antriebsritzel als Einheit entnehmen.
3. Den Tisch langsam drehen lassen und das Zahnrad dabei mit einer dünnen Schicht schmieren.
4. Wenn die Schmierung abgeschlossen ist, die Antriebsritzelbaugruppe und den Encoderschutz vorsichtig wieder einsetzen.

5.3.2 Wartung der Linearschiene

Während des Betriebs sind die Linearschienen und -führungen regelmäßig zu schmieren.

Die entscheidende Ausrichtung von Schienen, Führungen und Gegenstücken wird werkseitig ausgeführt. Falls eine Neuausrichtung erforderlich ist, wenden Sie sich an CLIMAX, um diesen Dienst zu arrangieren.

Wischen Sie vor und nach der Benutzung der Maschine die Schienen und Wege mit leichtem Maschinenöl ab.

NOTICE

Lassen Sie nichts auf die Schienen fallen und lagern Sie keine Gegenstände auf den Schienen.

5.4 FEHLERBEHEBUNG

Dieser Abschnitt soll Ihnen helfen, grundlegende Probleme mit der Maschinenleistung zu lösen. Um eine größere Wartung zu vereinbaren oder wenn Sie Fragen zu den folgenden Verfahren haben, wenden Sie sich bitte an CLIMAX.

5.4.1 Der Drehtisch dreht sich nicht

Wenn sich die Maschine nicht dreht, überprüfen Sie Folgendes:

- Die HPE-Stromversorgung ist eingeschaltet (Abschnitt 3.11 auf Seite 50).
- Es besteht eine stabile Verbindung zwischen HPE und Servo (Abschnitt 3.11 auf Seite 50). Versuchen Sie Folgendes:
  a) Die HPE ausschalten.
  b) Alle Fremdkörper in den Anschlüssen entfernen.
  c) Sicherstellen, dass die Anschlüsse richtig eingerastet sind.
  d) Überprüfen, dass die Leitungen weder beschädigt noch abgeklemmt sind.
- Es sind keine Späne in die Kabel eingedrungen und die Kabel auch nicht anderweitig beschädigt (Abschnitt 1.4 auf Seite 3).
- Eventuelle am Handbediengerät angezeigte Fehlermeldungen (Abschnitt 4.2.2 auf Seite 60).
- Für Einpunktmodus: Überprüfen, dass die Schleppbremse gelöst ist (Abschnitt 5.2.6 auf Seite 101).

5.4.2 Die Maschine fördert nicht oder ist langsam und reagiert nicht

Wenn die Maschine nicht ordnungsgemäß zuführt, überprüfen Sie Folgendes:

- Die pneumatischen Leitungen haben von der Quelle zum Vorschubkasten keine unterbrochenen oder getrennten Verbindungen (Abbildung 4-47 auf Seite 94).
- Der Vorschubkasten ist aktiviert (Abschnitt 4.2 auf Seite 59).
- Verschmutzte Filter wurden gereinigt (Abschnitt 5.3 auf Seite 102).
- Die Z-Bremse ist gelöst (Abschnitt 4.1.3 auf Seite 55).

5.4.3 Die Maschine schneidet schlecht

Wenn die Maschine schlecht schneidet, überprüfen Sie Folgendes:

- Für die Anwendung wird der richtige Planfräser verwendet (z.B. die richtige Größe für die betreffende Anwendung).
- Der Planfräser ist in der Spindel festgezogen (Abschnitt 4.3.2 auf Seite 76).
- Eventuelle Flanscheinsätze sind nicht gebrochen, stumpf oder lose. Ggf. festziehen, ersetzen oder drehen.
- Die Bremse ist aktiviert (Abschnitt 5.2.6 auf Seite 101).
- Keine verschlissenen oder beschädigten Teile in der Spindel. Wenn verschlissene oder beschädigte Teile in der Spindel gefunden werden, kontaktieren Sie CLIMAX für weitere Informationen.
- Der Vorschub und die Spindeldrehzahl sind für die jeweilige Anwendung angemessen. Die richtige Geschwindigkeit hängt von der Anwendung ab.
- Die Spannvorrichtungen sind am Werkzeugarm fest angezogen (Abschnitt 3.6.1 auf Seite 35).
- Beim Fräsen ist die Schleppbremse richtig angezogen (Abschnitt 5.2.6 auf Seite 101).
- Das Innenmontagespannfutter hat gleichmäßigen Spanndruck (Abschnitt 3.5.3 auf Seite 33).

5.4.4 Die Maschine schneidet nicht ebenmäßig

Wenn die Maschine nicht eben schneidet, überprüfen Sie Folgendes:

- Die Maschine ist korrekt mit dem Werkstück eingespannt (Abschnitt 3.7 auf Seite 39).
- Die Spannfüße sind nicht übermäßig angespannt, was zu einer Verformung des Werkstücks führen könnte (Abschnitt 3.5.3 auf Seite 33).
- Die Spindel ist umgesetzt (Abschnitt 4.1.3 auf Seite 55).

5.4.5 Die Spindel dreht sich nicht

Wenn sich die Spindel nicht dreht, überprüfen Sie Folgendes:

- Die HPE-Stromversorgung ist eingeschaltet (Abschnitt 3.11 auf Seite 50).
- Die Hydraulikschläuche sind angeschlossen (Abschnitt 3.11 auf Seite 50).
- Es werden keine Fehlermeldungen am Handbediengerät angezeigt (Abschnitt 4.2.2 auf Seite 60).
- Der Flüssigkeitsstand in der HPE ist ausreichend. Bei Bedarf nachfüllen.
- Die Spindel ist frei von jeglichen Fremdkörpern.

5.4.6 Die Maschine hält plötzlich an

Wenn die Maschine plötzlich anhält, überprüfen Sie Folgendes:

- Die HPE-Stromversorgung ist eingeschaltet (Abschnitt 3.11 auf Seite 50).
- Es werden keine Fehlermeldungen am Handbediengerät angezeigt (Abschnitt 4.2.2 auf Seite 60).
- Die Leitungen sind nicht beschädigt oder getrennt.

5.4.7 Die Schnitttiefe ändert sich unbeabsichtigt

Wenn sich die Schnitttiefe unbeabsichtigt ändert, überprüfen Sie Folgendes:

- Die Bremse ist aktiviert (Abschnitt 5.4 auf Seite 106).
- Die Reibung der Leitspindel in Z-Richtung ist ausreichend. Falls zu lose: Die Stellschrauben auf beiden Seiten des Lagerblocks anziehen, um die Spannung an den Spannbuchsen zu erhöhen.

5.4.8 Das Servosystem gibt Alarm oder Warnung

Für Probleme mit dem Anschlusskasten des Servomotors siehe Anhang D auf Seite 179.

Für den älteren Servomotor (MR-J3), siehe Abschnitt 5.5 auf Seite 109.

5.5 FEHLERCODE VOM MR-J3 SERVOVERSTÄRKER

> **POINT**
> • As soon as an alarm occurs, make the Servo off status and interrupt the main circuit power.

If an alarm/warning has occurred, refer to this chapter and remove its cause.

8.1 Alarms and warning list

When a fault occurs during operation, the corresponding alarm or warning is displayed. If any alarm or warning has occurred, refer to section 8.2 or 8.3 and take the appropriate action. When an alarm occurs, the ALM turns OFF.
After its cause has been removed, the alarm can be deactivated in any of the methods marked O in the alarm deactivation column. The alarm is automatically canceled after removing the cause of occurrence.

	Display	Name	Alarm deactivation		
			Power OFF→ON	Error reset	CPU reset
Alarms	10	Undervoltage	O	O	O
	12	Memory error 1 (RAM)	O		
	13	Clock error	O		
	15	Memory error 2 (EEP-ROM)	O		
	16	Encoder error 1 (At power on)	O		
	17	Board error	O		
	19	Memory error 3 (Flash-ROM)	O		
	1A	Motor combination error	O		
	20	Encoder error 2	O		
	24	Main circuit error	O	O	O
	25	Absolute position erase	O		
	30	Regenerative error	(Note 1) O	(Note 1) O	(Note 1) O
	31	Overspeed	O	O	O
	32	Overcurrent	O		
	33	Overvoltage	O	O	O
	34	Receive error 1	O	(Note 2) O	O
	35	Command frequency error	O	O	O
	36	Receive error 2	O	O	O
	37	Parameter error	O		
	45	Main circuit device overheat	(Note 1) O	(Note 1) O	(Note 1) O
	46	Servo motor overheat	(Note 1) O	(Note 1) O	(Note 1) O
	47	Cooling fan error	O		
	50	Overload 1	(Note 1) O	(Note 1) O	(Note 1) O
	51	Overload 2	(Note 1) O	(Note 1) O	(Note 1) O
	52	Error excessive	O	O	O
	8A	USB communication time-out error	O	O	O
	8E	USB communication error	O	O	O
	888	Watchdog	O		

	Display	Name
Warnings	92	Battery cable disconnection warning
	96	Home position setting warning
	9F	Battery warning
	E0	Excessive regeneration warning
	E1	Overload warning 1
	E3	Absolute position counter warning
	E4	Parameter warning
	E6	Servo forced stop warning
	E7	Controller forced stop warning
	E8	Cooling fan speed reduction warning
	E9	Main circuit off warning
	EC	Overload warning 2
	ED	Output watt excess warning

Note 1. Deactivate the alarm about 30 minutes of cooling time after removing the cause of occurrence.
2. In some controller communication status, the alarm factor may not be removed.

8.2 Remedies for alarms

CAUTION

- When any alarm has occurred, eliminate its cause, ensure safety, then reset the alarm, and restart operation. Otherwise, injury may occur.
- If an absolute position erase (25) occurred, always make home position setting again. Not doing so may cause unexpected operation.
- As soon as an alarm occurs, mark Servo-off and power off the main circuit and control circuit.

POINT

- When any of the following alarms has occurred, do not deactivate the alarm and resume operation repeatedly. To do so will cause the servo amplifier/servo motor to fail. Remove the cause of occurrence, and leave a cooling time of more than 30 minutes before resuming operation. To protect the main circuit elements, any of these servo alarms cannot be deactivated from the servo system controller until the specified time elapses after its occurrence. Judging the load changing condition until the alarm occurs, the servo amplifier calculates this specified time automatically.
- Regenerative error (30)
- Overload 1 (50)
- Overload 2 (51)
- The alarm can be deactivated by switching power off, then on or by the error reset command • CPU reset from the servo system controller. For details, refer to section 8.1.

When an alarm occurs, the trouble (ALM) switches off and the dynamic brake is operated to stop the servo motor. At this time, the display indicates the alarm No.
The servo motor comes to a stop. Remove the cause of the alarm in accordance with this section. Use the MR Configurator to refer to a factor of alarm occurrence.

Display	Name	Definition	Cause	Action
10	Undervoltage	Power supply voltage dropped. MR-J3-□B: 160VAC or less MR-J3-□B1: 83VAC or less MR-J3-□B4: 280VAC or less	1. Power supply voltage is low.	Check the power supply.
			2. There was an instantaneous control power failure of 60ms or longer.	
			3. Shortage of power supply capacity caused the power supply voltage to drop at start, etc.	
			4. The bus voltage dropped to the following value or less. MR-J3-□B: 200VDC MR-J3-□B1: 158VDC MR-J3-□B4: 380VDC	
			5. Faulty parts in the servo amplifier Checking method Alarm (10) occurs if power is switched on after disconnection of all cables but the control circuit power supply cables.	Change the servo amplifier.

Display	Name	Definition	Cause	Action
12	Memory error 1 (RAM)	RAM, memory fault	Faulty parts in the servo amplifier Checking method Alarm (any of 12 and 13) occurs if power is switched on after disconnection of all cables but the control circuit power supply cables.	Change the servo amplifier.
13	Clock error	Printed board fault		
		Clock error transmitted from the controller	Faulty controller Checking method Alarm (13) occurs, if servo controller is used in multiple CPU system.	Change the servo system controller.
15	Memory error 2 (EEP-ROM)	EEP-ROM fault	1. Faulty parts in the servo amplifier Checking method Alarm (15) occurs if power is switched on after disconnection of all cables but the control circuit power supply cables.	Change the servo amplifier.
			2. The number of write times to EEP-ROM exceeded 100,000.	
16	Encoder error 1 (At power on)	Communication error occurred between encoder and servo amplifier.	1. Encoder connector (CN2) disconnected.	Connect correctly.
			2. Encoder fault	Change the servo motor.
			3. Encoder cable faulty (Wire breakage or shorted)	Repair or change the cable.
			4. Encoder cable type (2-wire, 4-wire) selection was wrong in parameter setting.	Correct the setting in the fourth digit of parameter No.PC04.
17	Board error 2	CPU/parts fault	Faulty parts in the servo amplifier Checking method Alarm (17 or 19) occurs if power is switched on after disconnection of all cables but the control circuit power supply cable.	Change the servo amplifier.
19	Memory error 3 (Flash ROM)	ROM memory fault		
1A	Motor combination error	Wrong combination of servo amplifier and servo motor.	Wrong combination of servo amplifier and servo motor connected.	Use correct combination.
20	Encoder error 2	Communication error occurred between encoder and servo amplifier.	1. Encoder connector (CN2) disconnected.	Connect correctly.
			2. Encoder cable faulty (Wire breakage or shorted)	Repair or change the cable.
			3. Encoder fault	Change the servo motor.
24	Main circuit error	Ground fault occurred at the servo motor power (U,V and W phases) of the servo amplifier.	1. Power input wires and servo motor power wires are in contact.	Connect correctly.
			2. Sheathes of servo motor power cables deteriorated, resulting in ground fault.	Change the cable.
			3. Main circuit of servo amplifier failed. Checking method Alarm (24) occurs if the servo is switched on after disconnecting the U, V, W power cables from the servo amplifier.	Change the servo amplifier.
25	Absolute position erase	Absolute position data in error	1. Voltage drop in encoder (Battery disconnected.)	After leaving the alarm occurring for a few minutes, switch power off, then on again. Always make home position setting again.
			2. Battery voltage low	Change the battery. Always make home position setting again.
			3. Battery cable or battery is faulty.	
		Power was switched on for the first time in the absolute position detection system.	4. Home position not set.	After leaving the alarm occurring for a few minutes, switch power off, then on again. Always make home position setting again.

Display	Name	Definition	Cause	Action
30	Regenerative error	Permissible regenerative power of the built-in regenerative resistor or regenerative option is exceeded.	1. Wrong setting of parameter No. PA02	Set correctly.
			2. Built-in regenerative resistor or regenerative option is not connected.	Connect correctly.
			3. High-duty operation or continuous regenerative operation caused the permissible regenerative power of the regenerative option to be exceeded. Checking method Call the status display and check the regenerative load ratio.	1. Reduce the frequency of positioning. 2. Use the regenerative option of larger capacity. 3. Reduce the load.
			4. Power supply voltage is abnormal. MR-J3-□B: 260VAC or more MR-J3-□B1: More than 135VAC MR-J3-□B4: 535VAC or more	Check the power supply.
			5. Built-in regenerative resistor or regenerative option faulty.	Change the servo amplifier or regenerative option.
		Regenerative transistor fault	6. Regenerative transistor faulty. Checking method 1) The regenerative option has overheated abnormally. 2) The alarm occurs even after removal of the built-in regenerative resistor or regenerative option.	Change the servo amplifier.
31	Overspeed	Speed has exceeded the instantaneous permissible speed.	1. Small acceleration/deceleration time constant caused overshoot to be large.	Increase acceleration/deceleration time constant.
			2. Servo system is instable to cause overshoot.	1. Re-set servo gain to proper value. 2. If servo gain cannot be set to proper value. 1) Reduce load inertia moment ratio; or 2) Reexamine acceleration/deceleration time constant.
			3. Encoder faulty.	Change the servo motor.
32	Overcurrent	Current that flew is higher than the permissible current of the servo amplifier. (If the alarm (32) occurs again when turning ON the servo after resetting the alarm by turning OFF/ON the power when the alarm (32) first occurred, the transistor (IPM • IGBT) of the servo amplifier may be at fault. In the case, do not repeat to turn OFF/ON the power. Check the transistor with the checking method of "Cause 2".)	1. Short occurred in servo motor power (U, V, W).	Correct the wiring.
			2. Transistor (IPM • IGBT) of the servo amplifier faulty. Checking method Alarm (32) occurs if power is switched on after U,V and W are disconnected.	Change the servo amplifier.
			3. Ground fault occurred in servo motor power (U, V, W).	Correct the wiring.
			4. External noise caused the overcurrent detection circuit to misoperate.	Take noise suppression measures.

Display	Name	Definition	Cause	Action
33	Overvoltage	The following shows the input value of converter bus voltage. MR-J3-□B(1): 400VDC or more MR-J3-□B4: 800VDC or more	1. Regenerative option is not used.	Use the regenerative option.
			2. Though the regenerative option is used, the parameter No.PA02 setting is "□□00 (not used)".	Set correctly.
			3. Lead of built-in regenerative resistor or regenerative option is open or disconnected.	1. Change the lead. 2. Connect correctly.
			4. Regenerative transistor faulty.	Change the servo amplifier.
			5. Wire breakage of built-in regenerative resistor or regenerative option	1. For wire breakage of built-in regenerative resistor, change the servo amplifier. 2. For wire breakage of regenerative option, change the regenerative option.
			6. Capacity of built-in regenerative resistor or regenerative option is insufficient.	Add regenerative option or increase capacity.
			7. Power supply voltage high.	Check the power supply.
			8. Ground fault occurred in servo motor power (U, V, W).	Correct the wiring.
			9. The jumper across BUE-SD of the FR-BU2 brake unit is removed.	Fit the jumper across BUE-SD.
34	Receive error 1	SSCNETⅢ communication error (Continuously communication error with about 3.5ms interval.)	1. The SSCNETⅢ cable is disconnected.	Connect it after turning off the control circuit power supply for servo amplifier.
			2. The surface at the end of SSCNETⅢ cable got dirty.	Wipe dirt at the surface away. (Refer to section 3.9)
			3. The SSCNETⅢ cable is broken or severed.	Change the cable.
			4. Noise entered the servo amplifier.	Take noise suppression measures.
			5. Optical characteristic of SSCNETⅢ cable deteriorated because vinyl tape and/or wire sheath, which contains migrating plasticizer, adhered to the cable.	Remove the vinyl tape and/or wire sheath, which contains migrating plasticizer, and exchange the cable.
35	Command frequency error	Input pulse frequency of command pulse is too high.	1. Command given is greater than the maximum speed of the servo motor.	Check operation program.
			2. Servo system controller failure.	Change the servo system controller.
			3. Noise entered the servo amplifier.	Take noise of I/O signal suppression measures.
			4. Noise entered the controller.	Take noise from the controller suppression measures.
36	Receive error 2	SSCNETⅢ communication error (Intermittently communication error with about 70ms interval.)	1. The SSCNETⅢ cable is disconnected.	Connect it after turning off the control circuit power supply for servo amplifier.
			2. The surface at the end of SSCNETⅢ cable got dirty.	Wipe dirt away from the surface. (Refer to section 3.9)
			3. The SSCNETⅢ cable is broken or severed.	Change the cable.
			4. Noise entered the servo amplifier.	Take noise suppression measures.
			5. Optical characteristic of SSCNETⅢ cable deteriorated because vinyl tape and/or wire sheath, which contains migrating plasticizer, adhered to the cable.	Remove the vinyl tape and/or wire sheath, which contains migrating plasticizer, and exchange the cable.

Display	Name	Definition	Cause	Action
37	Parameter error	Parameter setting is wrong.	1. Servo amplifier fault caused the parameter setting to be rewritten.	Change the servo amplifier.
			2. There is a parameter whose value was set to outside the setting range by the controller.	Change the parameter value to within the setting range.
			3. The number of write times to EEP-ROM exceeded 100,000 due to parameter write, etc.	Change the servo amplifier.
45	Main circuit device overheat	Main circuit device overheat	1. Servo amplifier faulty.	Change the servo amplifier.
			2. The power supply was turned on and off continuously by overloaded status.	The drive method is reviewed.
			3. Ambient temperature of servo motor is over 55℃.	Check environment so that ambient temperature is 0 to 55℃.
			4. Used beyond the specifications of close mounting.	Use within the range of specifications.
46	Servo motor overheat	Servo motor temperature rise actuated the thermal sensor.	1. Ambient temperature of servo motor is over 40℃.	Check environment so that ambient temperature is 0 to 40℃.
			2. Servo motor is overloaded.	1. Reduce load. 2. Check operation pattern. 3. Use servo motor that provides larger output.
			3. Thermal sensor in encoder is faulty.	Change the servo motor.
47	Cooling fan error	The cooling fan of the servo amplifier stopped, or its speed decreased to or below the alarm level.	1. Cooling fan life expiration (Refer to section 2.5.)	Change the cooling fan of the servo amplifier.
			2. Foreign matter caught in the cooling fan stopped rotation.	Remove the foreign matter.
			3. The power supply of the cooling fan failed.	Change the servo amplifier.
50	Overload 1	Load exceeded overload protection characteristic of servo amplifier.	1. Servo amplifier is used in excess of its continuous output current.	1. Reduce load. 2. Check operation pattern. 3. Use servo motor that provides larger output.
			2. Servo system is instable and hunting.	1. Repeat acceleration/ deceleration to execute auto tuning. 2. Change the auto tuning response setting. 3. Set auto tuning to OFF and make gain adjustment manually.
			3. Machine struck something.	1. Check operation pattern. 2. Install limit switches.
			4. Wrong connection of servo motor. Servo amplifier's output terminals U, V, W do not match servo motor's input terminals U, V, W.	Connect correctly.
			5. Encoder faulty. Checking method When the servo motor shaft is rotated with the servo off, the cumulative feedback pulses do not vary in proportion to the rotary angle of the shaft but the indication skips or returns midway.	Change the servo motor.
			6. After Overload 2 (51) occurred, turn OFF/ON the power supply to clear the alarm. Then the overload operation is repeated.	1. Reduce load. 2. Check operation pattern. 3. Use servo motor that provides larger output.

Display	Name	Definition	Cause	Action
51	Overload 2	Machine collision or the like caused max. For the time of the alarm occurrence, refer to the section 10.1.	1. Machine struck something.	1. Check operation pattern. 2. Install limit switches.
			2. Wrong connection of servo motor. Servo amplifier's output terminals U, V, W do not match servo motor's input terminals U, V, W.	Connect correctly.
			3. Servo system is instable and hunting.	1. Repeat acceleration/deceleration to execute auto tuning. 2. Change the auto tuning response setting. 3. Set auto tuning to OFF and make gain adjustment manually.
			4. Encoder faulty. Checking method When the servo motor shaft is rotated with the servo off, the cumulative feedback pulses do not vary in proportion to the rotary angle of the shaft but the indication skips or returns midway.	Change the servo motor.
52	Error excessive	The deviation between the model position and the actual servo motor position exceeds the parameter No.PC01 setting value (initial value: 3 revolutions).	1. Acceleration/deceleration time constant is too small.	Increase the acceleration/deceleration time constant.
			2. Torque limit value set with controller is too small.	Increase the torque limit value.
			3. Motor cannot be started due to torque shortage caused by power supply voltage drop.	1. Check the power supply capacity. 2. Use servo motor which provides larger output.
			4. Position loop gain 1 (parameter No.PB08) value is small.	Increase set value and adjust to ensure proper operation.
			5. Servo motor shaft was rotated by external force.	1. When torque is limited, increase the limit value. 2. Reduce load. 3. Use servo motor that provides larger output.
			6. Machine struck something.	1. Check operation pattern. 2. Install limit switches.
			7. Encoder faulty	Change the servo motor.
			8. Wrong connection of servo motor. Servo amplifier's output terminals U, V, W do not match servo motor's input terminals U, V, W.	Connect correctly.
			9. SSCNETⅢ cable fault	Change the SSCNETⅢ cable.
			10. Optical characteristic of SSCNETⅢ cable deteriorated because vinyl tape and/or wire sheath, which contains migrating plasticizer, adhered to the cable.	Remove the vinyl tape and/or wire sheath, which contains migrating plasticizer, and exchange the cable.
8A	USB communication time-out error	Communication with MR Configurator in test operation mode stopped for longer than the specified time.	1. USB cable breakage.	Change the USB cable.
8E	USB communication error	Serial communication error occurred between servo amplifier and communication device (e.g. personal computer).	1. USB cable fault (Open cable or short circuit)	Change the USB cable.
			2. Communication device (e.g. personal computer) faulty	Change the communication device (e.g. personal computer).

Display	Name	Definition	Cause	Action
(Note) 888	Watchdog	CPU, parts faulty	Fault of parts in servo amplifier Checking method Alarm (888) occurs if power is switched on after disconnection of all cables but the control circuit power supply cable.	Change the servo amplifier.

Note. At power-on, "888" appears instantaneously, but it is not an error.

8.3 Remedies for warnings

⚠ CAUTION

- If an absolute position counter warning (E3) occurred, always make home position setting again. Not doing so may cause unexpected operation.

POINT

- When any of the following alarms has occurred, do not resume operation by switching power of the servo amplifier OFF/ON repeatedly. The servo amplifier and servo motor may become faulty. If the power of the servo amplifier is switched OFF/ON during the alarms, allow more than 30 minutes for cooling before resuming operation.
  - Excessive regenerative warning (E0)
  - Overload warning 1 (E1)

If E6, E7 or E9 occurs, the servo off status is established. If any other warning occurs, operation can be continued but an alarm may take place or proper operation may not be performed.
Remove the cause of warning according to this section. Use the MR Configurator to refer to a factor of warning occurrence.

Display	Name	Definition	Cause	Action
92	Battery cable disconnection warning	Absolute position detection system battery voltage is low.	1. Battery cable is open.	Repair cable or changed.
			2. Battery voltage supplied from the servo amplifier to the encoder fell to about 3V or less. (Detected with the encoder)	Change the battery.
96	Home position setting warning	Home position setting could not be made.	1. Droop pulses remaining are greater than the in-position range setting.	Remove the cause of droop pulse occurrence
			2. Command pulse entered after clearing of droop pulses.	Do not enter command pulse after clearing of droop pulses.
			3. Creep speed high.	Reduce creep speed.
9F	Battery warning	Voltage of battery for absolute position detection system reduced.	Battery voltage fell to 3.2V or less. (Detected with the servo amplifier)	Change the battery.
E0	Excessive regeneration warning	There is a possibility that regenerative power may exceed permissible regenerative power of built-in regenerative resistor or regenerative option.	Regenerative power increased to 85% or more of permissible regenerative power of built-in regenerative resistor or regenerative option. Checking method Call the status display and check regenerative load ratio.	1. Reduce frequency of positioning. 2. Change the regenerative option for the one with larger capacity. 3. Reduce load.

Display	Name	Definition	Cause	Action
E1	Overload warning 1	There is a possibility that overload alarm 1 or 2 may occur.	Load increased to 85% or more of overload alarm 1 or 2 occurrence level. Cause, checking method Refer to 50,51.	Refer to 50, 51.
E3	Absolute position counter warning	Absolute position encoder pulses faulty.	1. Noise entered the encoder.	Take noise suppression measures.
			2. Encoder faulty.	Change the servo motor.
		The multi-revolution counter value of the absolute position encoder exceeded the maximum revolution range.	3. The movement amount from the home position exceeded a 32767 rotation or 37268 rotation in succession.	Make home position setting again.
E4	Parameter warning	Parameter outside setting range	Parameter value set from servo system controller is outside setting range	Set it correctly.
E6	Servo forced stop warning	EM1 is off.	External forced stop was made valid. (EM1 was turned off.)	Ensure safety and deactivate forced stop.
E7	Controller forced stop warning		Forced stop signal was entered into the servo system controller.	Ensure safety and deactivate forced stop.
E8	Cooling fan speed reduction warning	The speed of the servo amplifier decreased to or below the warning level. This warning is not displayed with MR-J3-70B/100B among servo amplifiers equipped with a cooling fan.	Cooling fan life expiration (Refer to section 2.5.)	Change the cooling fan of the servo amplifier.
			The power supply of the cooling fan is broken.	Change the servo amplifier.
E9	Main circuit off warning	Servo-on command was issued with main circuit power off.		Switch on main circuit power.
EC	Overload warning 2	Operation, in which a current exceeding the rating flew intensively in any of the U, V and W phases of the servo motor, was repeated.	During a stop, the status in which a current flew intensively in any of the U, V and W phases of the servo motor occurred repeatedly, exceeding the warning level.	1. Reduce the positioning frequency at the specific positioning address. 2. Reduce the load. 3. Replace the servo amplifier/ servo motor with the one of larger capacity.
ED	Output watt excess warning	The status, in which the output wattage (speed × torque) of the servo motor exceeded the rated output, continued steadily.	Continuous operation was performed with the output wattage (speed × torque) of the servo motor exceeding 150% of the rated output.	1. Reduce the servo motor speed. 2. Reduce the load.

Die Fehlercodes des MR-J4-Servoverstärkers finden Sie im Anhang D.

Diese Seite bleibt leer

6 LAGERUNG UND TRANSPORT

IN DIESEM KAPITEL:

6.1 LAGERUNG

Die CM6200 ist für die Lagerung in Innenräumen in einer temperatur- und feuchtigkeitsgeregelten Umgebung vorgesehen. Die sachgemäße Lagerung des CM6200 erhöht ihren Nutzen und verhindert unnötige Schäden.

Führen Sie vor der Lagerung folgende Schritte aus:

1. Die Maschine mit Lösungsmittel reinigen, um Fett, Metallspäne und Feuchtigkeit zu entfernen.
2. Alle Flüssigkeiten aus der Pneumatikanlage ablassen.

Den CM6200 in seinem ursprünglichen Versandbehälter lagern. Alle Verpackungsmaterialien für das Umpacken der Maschine aufbewahren.

6.1.1 Kurzzeitige Lagerung

Als kurzzeitige Lagerung gilt eine Lagerung von drei Monaten oder weniger. Für die kurzfristige Lagerung:

1. Die Spindeln vom Werkstück abziehen.
2. Die Werkzeuge entfernen.
3. Schläuche entfernen.
4. Die Maschine vom Werkstück abheben.
5. Die Maschine reinigen, um Schmutz, Fett, Metallspäne und Feuchtigkeit zu entfernen. Sicherstellen, dass die Maschine vor der Lagerung frei von Schmutz, Fett, Spänen und anderen Fremdkörpern ist.
6. Ein feuchtigkeitshemmendes Material auf unlackierte Oberflächen auftragen (LPS-2 für kurzzeitige Lagerung, LPS-3 für langfristige Lagerung), um Korrosion zu vermeiden.
7. Die Maschine in einer stabilen Position auf einem Ständer oder im Lagerbehälter gemäß der örtlichen Unternehmensrichtlinien lagern.

6.1.2 Langfristige Lagerung

Als langfristige Lagerung gilt eine Lagerung von mehr als drei Monaten.

Gehen Sie bei Langzeitlagerung wie folgt vor:

1. Die Schritte 1-6 für die kurzfristige Lagerung ausführen (Abschnitt 6.1.2 auf Seite 118).
2. Dem Versandbehälter einen Trockenmittelbeutel hinzufügen. Nach Herstellerangaben austauschen.
3. Den Transportbehälter in einer Umgebung ohne direkte Sonneneinstrahlung, bei Temperaturen unter 21 °C (70 °F) und einer Luftfeuchtigkeit unter 50 % lagern.

6.2 TRANSPORT

Die CM6200 in ihrem originalen Versandbehälter lagern.

6.3 AUßERBETRIEBNAHME

Um die CM6200 vor der Entsorgung außer Betrieb zu nehmen, die Drehtischnabe aus dem Spannfutter entnehmen und die Antriebsbaugruppe getrennt von den übrigen Maschinenkomponenten entsorgen. Für Informationen zur Komponentenmontage siehe Anhang A.

ANHANG A MONTAGEZEICHNUNGEN

Liste der Zeichnungen

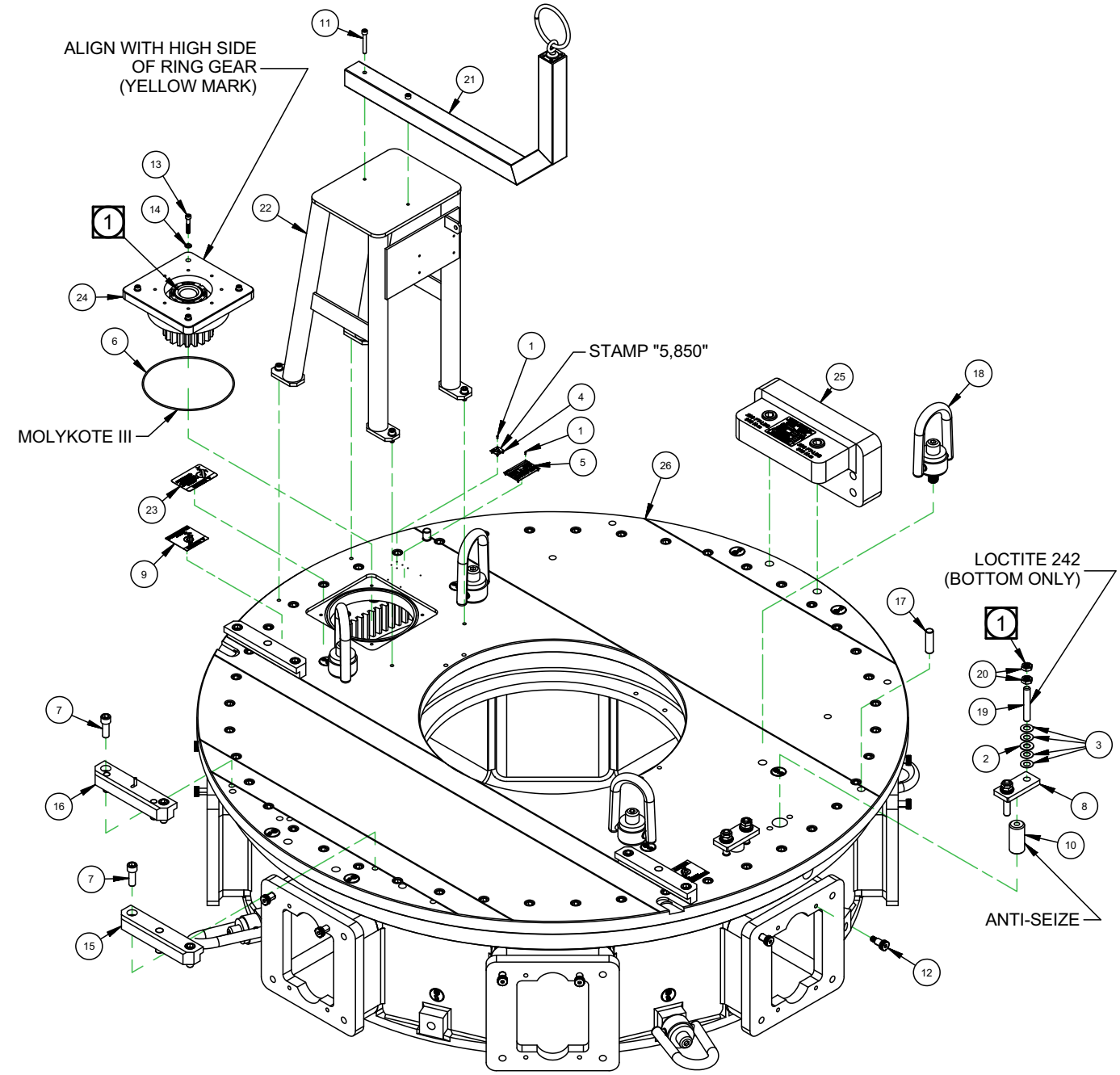

NOTES

1 ADJUST DRAG BRAKE JAM NUTS UNTIL TABLE ROTATES AT PINION WITH 4-5 IN-LBS OF TORQUE

ABBILDUNG A-1. DREHTISCHBAUGRUPPE (P/N 62028)

1	8	10588	SCREW DRIVE #2 x 1/4 HOLE SIZE .089
2	4	11693	WASHER 5/8 FLTW SAE
3	16	27172	WASHER SPRING BELLEVILLE 5/8 X 1-1/4 X .040
4	1	29152	PLATE MASS CE
5	1	29154	PLATE SERIAL YEAR MODEL CE 2.0 X 3.0
6	1	44658	O-RING 1/8 X 8-3/4 ID X 9 OD SILICONE
7	8	46222	SCREW M16 X 2.0 X 55mm SHCS
8	2	46232	BAR BRAKE SHOE CLAMP
9	2	46286	LABEL CIRCULAR MILL CRUSH HAZARD
10	2	54165	SHOE BRAKE 1.6m CIRCULAR MILL
11	2	57874	SCREW M8 X 1.25 X 60MM SHCS
12	16	58202	SCREW 16MM DIA X 20MM X M12 X 1.75 SHLDCS
13	4	59349	SCREW M8 X 1.25 X 45MM SHCS
14	4	59432	WASHER M8 FLTW 16MM OD 1.6MM THICK
15	3	62601	CLAMP ARM PINNED
16	1	62602	CLAMP SAFETY STOP ASSY
17	2	62605	PIN DOWEL 3/4 DIA X 3
18	4	62606	HOIST RING M24 X 3 X 38MM 70 ID X 130 OD 225 OAL 9250 LBS 4200 KG SWIVEL
19	4	62612	STUD THREADED M16 X 2 X 100MM FULL THD
20	8	62613	NUT M16 X 2.0 JAMN
21	1	62616	TOWER HOSE CM6200
22	1	62869	ASSY GUARD ENCODER CM6200
23	1	62884	LABEL FLANGE FACERS IMPACT HAZARD
24	1	63743	ASSY PINION DRIVE CM6200
25	1	68425	ASSY LIFTING CM6200 LOAD TESTED 5000 KG
26	1	96031	ASSY TABLE ROTARY CM6200
ITEM	QTY	PART No.	DESCRIPTION
PARTS LIST			

ABBILDUNG A-2. TEILELISTE DREHTISCHBAUGRUPPE (P/N 62028)

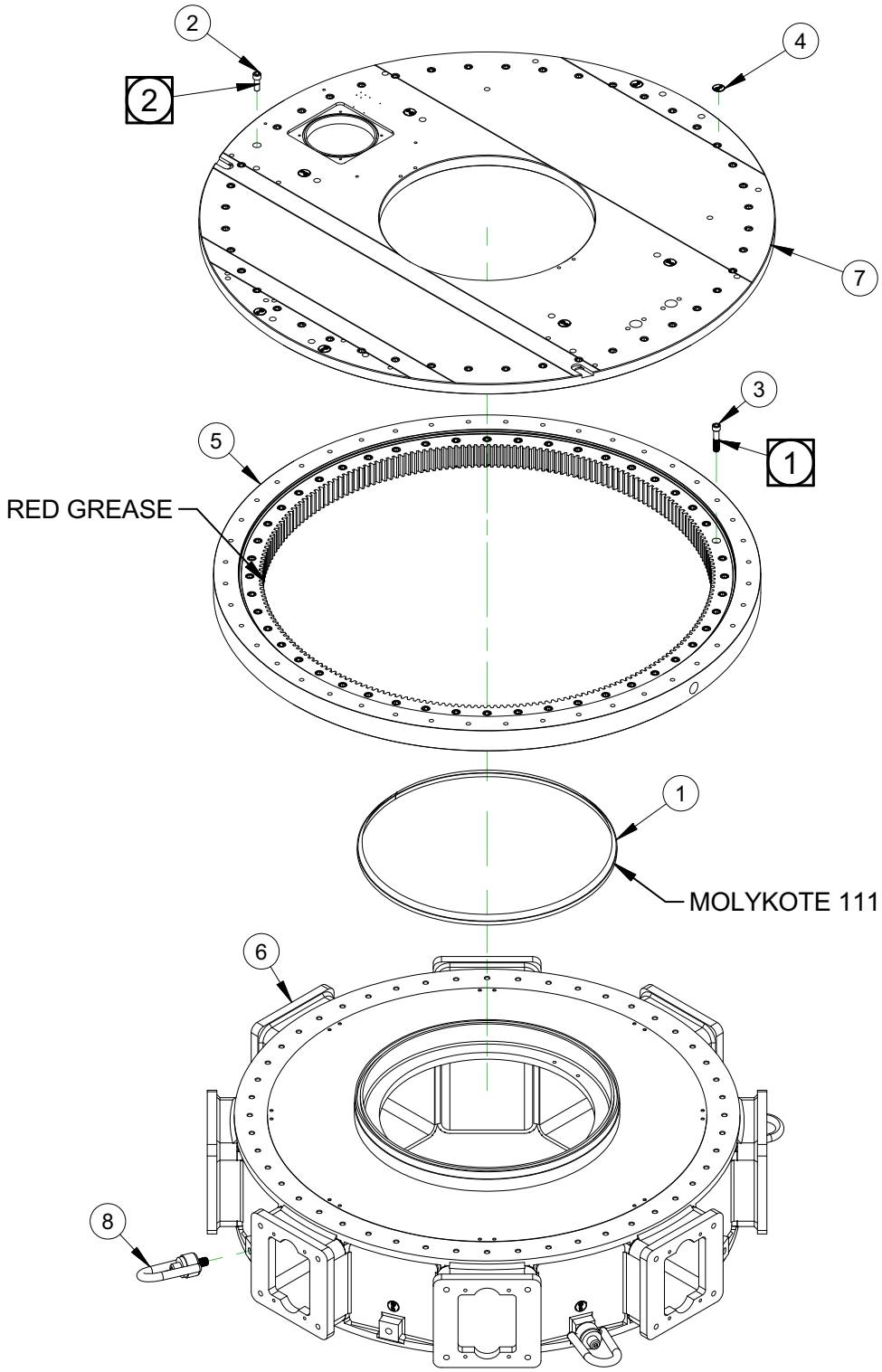

SEE SHEET 2 FOR PARTS LIST & TORQUE SPECIFICATIONS

ABBILDUNG A-3. DREHTISCHMONTAGE (P/N 96031)

PARTS LIST			
ITEM	QTY	P/N:	DESCRIPTION
1	1	45623	PUSH-ON TRIM SEAL - FLEXIBLE SEGMENTED CORE
2	44	46222	SCREW M16 X 2.0 X 55mm SHCS
3	48	58106	SCREW M16 X 2.0 X 80 SHCS
4	16	59039	LABEL WARNING LIFT POINT ROUND 1.5"
5	1	61565	ASSY BRG AND GEAR KAYDON 66 OD PRELOADED
6	1	61967	HUB CHUCK CM6200
7	1	62600	PLATE TABLE ROTARY CM6200
8	4	62606	HOIST RING M24 X 3 X 38MM 70 ID X 130 OD 225 OAL 9250 LBS 4200 KG SWIVEL

1 TORQUE SPECIFICATION: CM6200 BEARING TO CHUCK

LABEL BOLT HOLES FROM 1 TO 48 CLOCKWISE AROUND THE BEARING

TIGHTEN THE BOLTS USING THE FOLLING PATTERN IN THREE STAGES 70 FT-LBS, 140 FT-LBS, 200 FT-LBS. NOTE: TORQUE VALUES ARE FOR LUBRICATED FASTENERS. ENSURE TO USE BLUE LOCTITE DURING ASSEMBLY.

1 - 25 - 13 - 37 7 - 31 - 19 - 43 4 - 28 - 16 - 40 10 - 34 - 22 - 46
2 - 26 - 14 - 38 3 - 27 - 15 - 39 5 - 29 - 17 - 41 6 - 30 - 18 - 42
8 - 32 - 20 - 44 9 - 33 - 21 - 45 11 - 35 - 23 - 47 12 - 36 - 24 - 48

2 TORQUE SPECIFICATION: CM6200 TOP PLATE TO BEARING

LABEL BOLT HOLES FROM 1 TO 44 CLOCKWISE AROUND THE TOP PLATE

TIGHTEN THE BOLTS USING THE FOLLING PATTERN IN THREE STAGES 70 FT-LBS, 140 FT-LBS, 200 FT-LBS. NOTE: TORQUE VALUES ARE FOR LUBRICATED FASTENERS. ENSURE TO USE BLUE LOCTITE DURING ASSEMBLY.

1 - 23 - 12 - 34 6 - 28 - 17 - 39 3 - 25 - 14 - 36 8 - 30 - 19 - 41
4 - 26 - 15 - 37 9 - 31 - 20 - 42 2 - 24 - 13 - 35 7 - 29 - 18 - 40
5 - 27 - 16 - 38 10 - 32 - 21 - 43 11 - 33 - 22 - 44

ABBILDUNG A-4. TEILELISTE DER DREHTISCHBAUGRUPPE (P/N 96031)

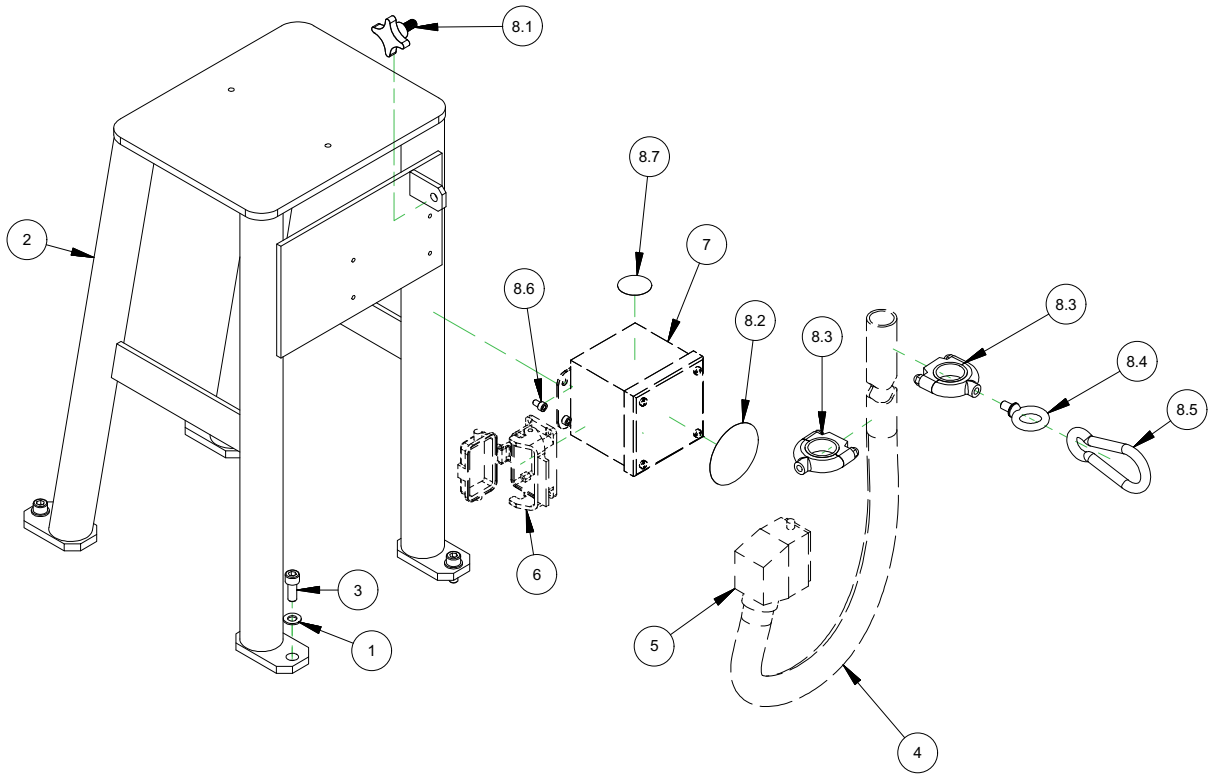

* ITEMS 4, 5, 6, AND 7 IN PHANTOM ARE FOR REFERENCE ONLY

PARTS LIST			
ITEM	QTY	PART No.	DESCRIPTION
1	4	62875	WASHER M10 FLTW DIN 125
2	1	62615	GUARD ENCODER CM6200
3	4	35339	SCREW M10 X 1.5 X 25mm SHCS
4	1	N/A*	CARFLEX X-FLEX 1 INCH NONMETALLIC CONDUIT
5	1	N/A*	HAN 10B-gs-R-29 HOOD SIDE ENTRY METAL
6	1	N/A*	HAN 10B-agg-LB-K HOUSING BULKHEAD MOUNTING METAL
7	1	N/A*	4 X 4 X 4 SCREW COVER SC JUNCTION BOX
8	1	63180	ASSY HARDWARE HOSE AND ENCODER GUARD CM6200
8.1	1	55463	KNOB FOUR ARM 2 DIA X 3/8-16 THREAD 3/4 L MODIFIED
8.2	1	82195	LABEL WARNING - LOCKOUT/ELECTRICAL GRAPHIC 3" DIA BLUE
8.3	2	55290	CONDUIT CLEAN ROOM HANGER 1-1/4 OD 3/8-16 THREAD
8.4	1	19239	EYE LIFTING 3/8 MODIFIED
8.5	1	55393	SPRING SNAP 5/8 SNAP O X 4-3/4 L BLK
8.6	4	57281	SCREW M6 X 1.0 X 10MM SHCS
8.7	1	59044	LABEL WARNING - CONSULT OPERATOR'S MANUAL

ABBILDUNG A-5. ENCODERSCHUTZEINHEIT (P/N 62869)

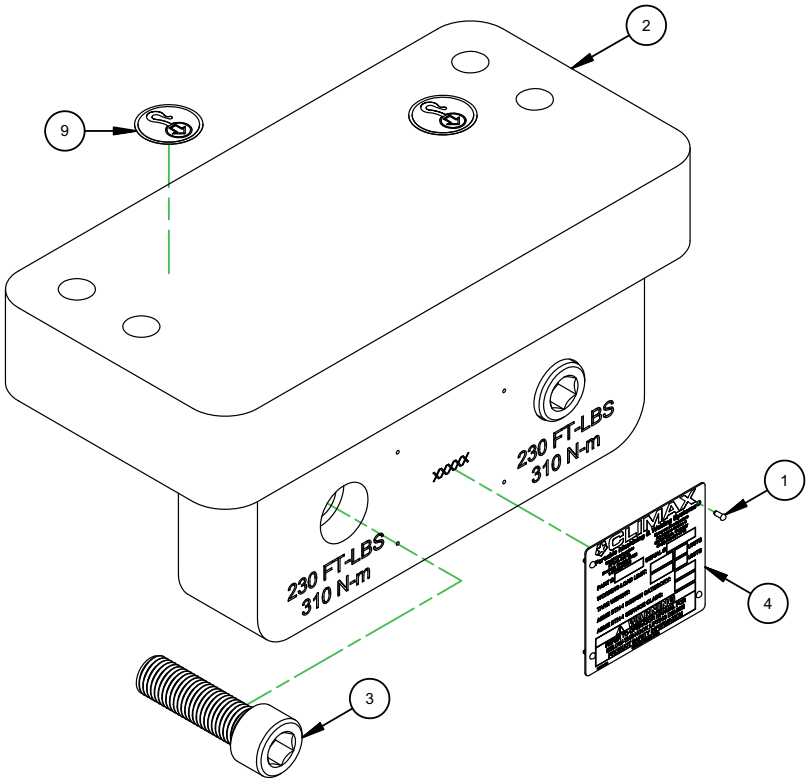

BELOW THE HOOK LIFTING INFO TAG

PART NUMBER:	68425
SERIAL NUMBER:	
WORKING LOAD LIMIT:	6000 KG
TARE WEIGHT:	55 KG
ASME BTH-1 DESIGN CATEGORY:	A
ASME BTH-1 SERVICE CLASS:	0

PARTS LIST			
ITEM	QTY	PART No.	DESCRIPTION
1	4	10588	SCREW DRIVE #2 x 1/4 HOLE SIZE .089
2	1	68423	PLATE LIFTING CM6200
3	2	68426	SCREW M24 X 3.0 X 80MM SHCS
4	1	69422	TAG BELOW THE HOOK LIFTING INFO AND SERIAL NUMBER
9	2	59039	LABEL WARNING LIFT POINT ROUND 1.5"

ABBILDUNG A-6. LASTGEPRÜFTE HEBEVORRICHTUNG (P/N 68425)

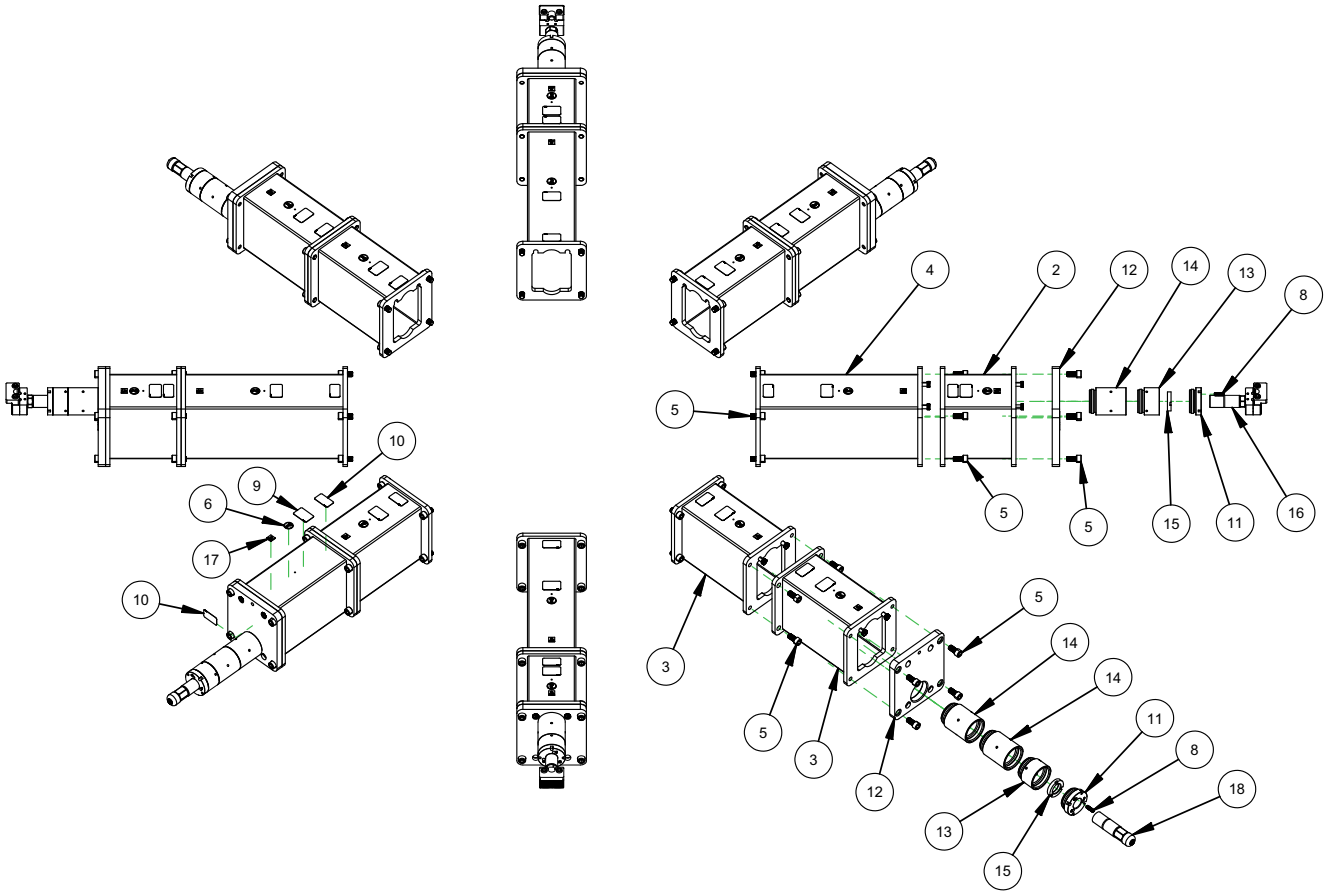

PARTS LIST			
ITEM	QTY	PART No.	DESCRIPTION
1	1	19700	(NOT SHOWN) CONTAINER SHIPPING FLAT ROOF 20 X 8.75 X 10.5
2	4	57724	WELDMENT STANDOFF 12.5 FF8200
3	8	57851	WELDMENT STANDOFF 17.5 FF8200
4	4	57852	WELDMENT STANDOFF 27.5 FF8200
5	96	58203	SCREW M20 X 2.5 X 40MM SHCS
6	16	59039	LABEL WARNING LIFT POINT ROUND 1.5"
7	4	63954	(NOT SHOWN) LIFTING EYE M6 X 1 X 12 THREAD 19 ID 460 LBS 210 KG
8	24	74499	SCREW M12 X 1.75 X 40mm SSSFP
9	16	79385	LABEL WARNING - LIFT SUB ASSY ONLY GRAPHIC 2 X 3
10	24	82157	LABEL CAUTION - TORQUE 150 FT-LBS (203 N-M) GRAPHIC 3 X 1.7
11	8	89717	CAP END 4.50 DIA 4-4 OD THREAD 2-8 ID THREAD
12	8	89718	PLATE BASE CHUCK
13	8	89720	LEG CHUCK TUBE 4.5 OD X 2.5 THREADED
14	12	89721	LEG CHUCK TUBE 4.5 OD X 5.0 THREADED
15	8	89726	NUT JACKING LOCK 2-8
16	4	90836	ASSY FOOT CHUCK ADJUSTABLE
17	16	91217	PLATE MASS CE 1.0 X 1.0 KG ADHESIVE BACKED
18	4	91232	ASSY FOOT NON LEVELING GRIPPER LARGE FF LINE

ABBILDUNG A-7. INNENMONTAGE-BAUGRUPPE (P/N 62038)

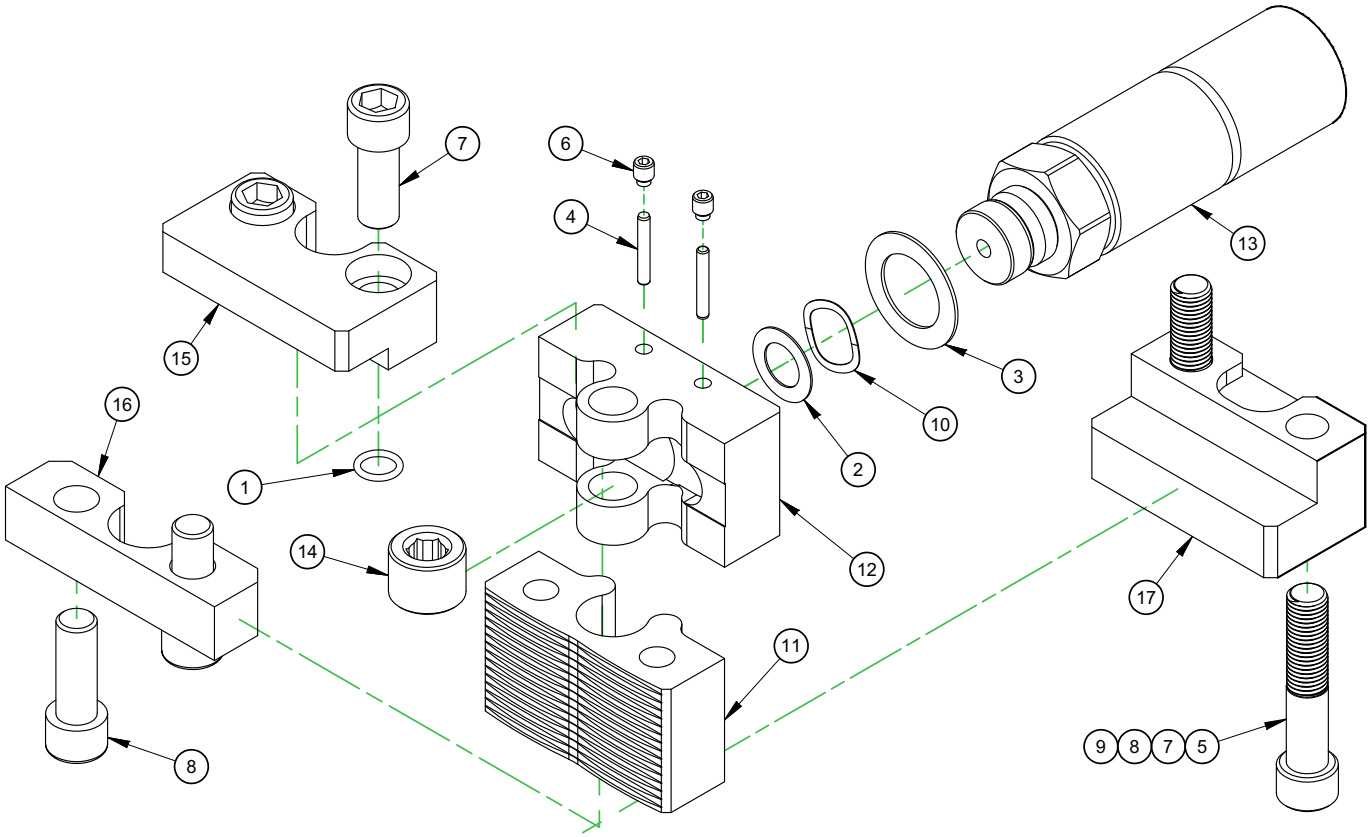

PARTS LIST			
ITEM	QTY	PART No.	DESCRIPTION
1	2	10611	RING O 3/32 X 9/16 ID X 3/4 OD
2	1	11739	WASHER THRUST .750 ID X 1.250 OD X .0312
3	1	16666	WASHER THRUST 1.250 ID X 1.937 OD X .060
4	2	19735	PIN DOWEL 3/16 DIA X 1-1/4
5	2	44227	SCREW M16 X 2.0 X 200 SHCS
6	2	44257	SCREW M8 X 1.25 X 10mm SSSDP
7	4	44905	SCREW M16 X 2.0 X 40mm SHCS
8	2	46222	SCREW M16 X 2.0 X 55mm SHCS
9	2	58106	SCREW M16 X 2.0 X 80 SHCS
10	1	58244	WASHER SPRING WAVE 1.235 OD X .961 ID X .014
11	1	63582	JAW ADJUSTER CM6200
12	1	63583	BASE ADJUSTER CM6200
13	1	63584	JAW SCREW CM6200
14	1	63585	SCREW M30 X 1.5 X .875 HOLLOW LOCK MOD
15	1	63586	FINGER SETUP EXTENSION CM6200
16	1	63842	RESTRAINT SAFETY WELD PLATE CM6200
17	1	63853	CLAMP INTERNAL FLANGE CM6200
18	2	64086	SCREW M16 X 2.0 X 120 SHCS
19	2	64087	SCREW M16 X 2.0 X 160 SHCS

ABBILDUNG A-8. VERSTELLBARE SPANNFUTTERFUßBAUGRUPPE (P/N 89730)

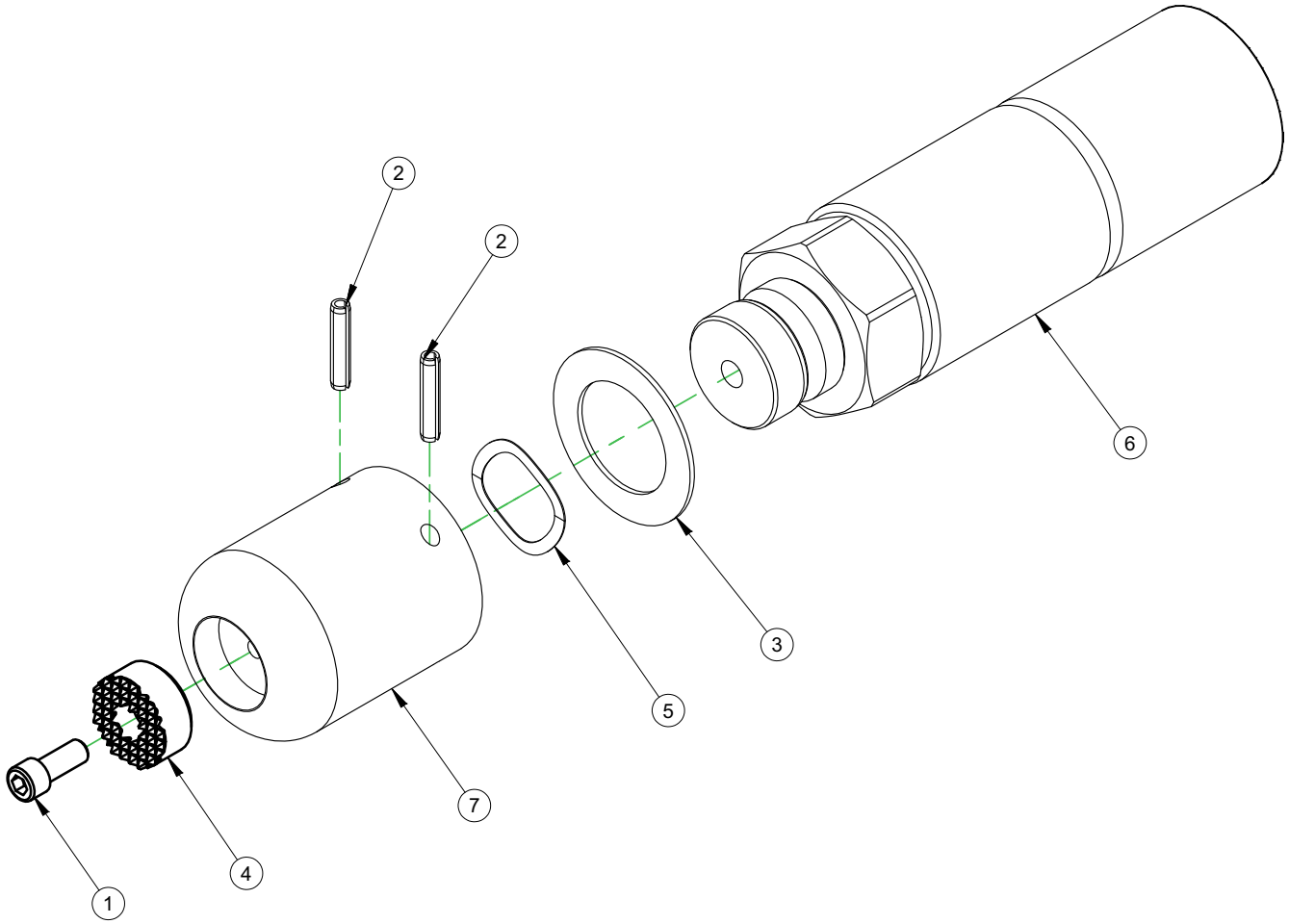

PARTS LIST			
ITEM	QTY	PART No.	DESCRIPTION
1	1	12418	SCREW 1/4-20 X 5/8 SHCS
2	2	12959	PIN ROLL Ø3/16 X 1
3	1	16666	WASHER THRUST 1.250 ID X 1.937 OD X .060
4	1	41644	GRIPPER SERRATED HSS 1 DIAM X 1/2 CBORED
5	1	58244	WASHER SPRING WAVE 1.235 OD X .961 ID X .014
6	1	63584	JAW SCREW CM6200
7	1	91186	CAP FOOT NON LEVELING GRIPPER CM6200

ABBILDUNG A-9. NICHT-NIVELLIERENDE FUßBAUGRUPPE (P/N 91317)

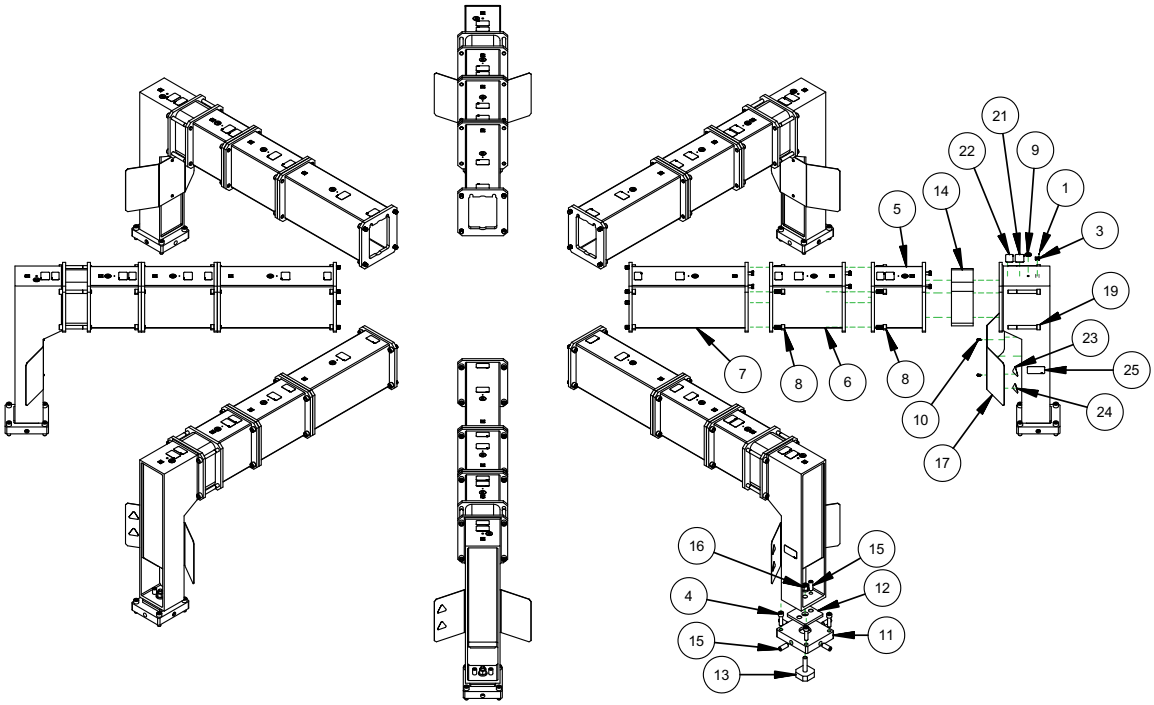

PARTS LIST			
ITEM	QTY	PART No.	DESCRIPTION
1	128	10588	SCREW DRIVE #2 x 1/4 HOLE SIZE .089
2	1	19700	(NOT SHOWN) CONTAINER SHIPPING FLAT ROOF 20 X 8.75 X 10.5
3	32	29152	PLATE MASS CE
4	32	56192	SCREW M20 X 2.5 X 70 MM SHCS
5	8	57724	WELDMENT STANDOFF 12.5 FF8200
6	8	57851	WELDMENT STANDOFF 17.5 FF8200
7	8	57852	WELDMENT STANDOFF 27.5 FF8200
8	96	58203	SCREW M20 X 2.5 X 40MM SHCS
9	32	59039	LABEL WARNING LIFT POINT ROUND 1.5"
10	16	59827	SCREW M8 X 1.25 X 16MM BHSCS
11	8	60751	PLATE CENTERING OD MOUNT FF8200
12	8	60752	PLATE WASHER OD MOUNT FF8200
13	8	60753	STUD HOLD DOWN M24 OD MOUNT FF8200
14	8	60755	STANDOFF 5 INCH OD MOUNT FF8200
15	48	60756	SCREW M24 X 3.0 X 60MM SSSFP
16	8	60757	NUT M24 X 3.0 FLANGED
17	8	61433	SHIELD OD MOUNT FF8200
18	8	62687	LEG VERTICAL SUPPORT OD MOUNT CM6200
19	32	63935	SCREW M20 X 2.5 X 170MM SHCS
20	4	63954	(NOT SHOWN) LIFTING EYE M6 X 1 X 12 THREAD 19 ID 460 LBS 210 KG
21	32	79385	LABEL WARNING - LIFT SUB ASSY ONLY GRAPHIC 2 X 3
22	32	82157	LABEL CAUTION - TORQUE 150 FT-LBS (203 N-M) GRAPHIC 3 X 1.7
23	8	82163	LABEL WARNING - HAND CRUSH GRAPHIC 1.95"
24	8	82164	LABEL WARNING - BODY CRUSH GRAPHIC 1.95"
25	8	82172	LABEL DANGER - GUARDS OD MOUNT GRAPHIC 4 X 2

ABBILDUNG A-10. AUßENMONTAGE-BAUGRUPPE (P/N 62039)

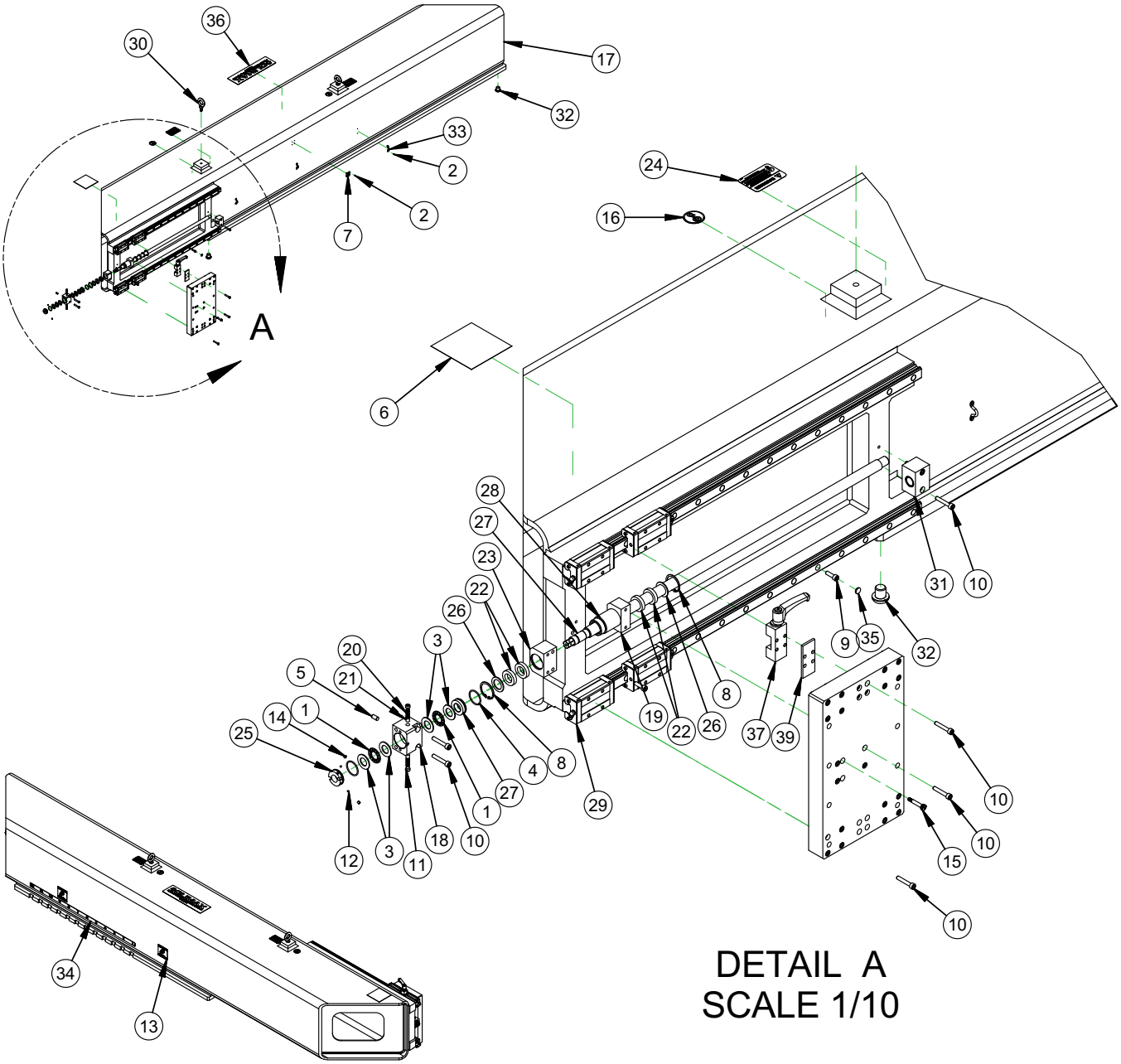

ABBILDUNG A-11. FRÄSARMEINHEIT (P/N 72676)

PARTS LIST			
ITEM	QTY	P/N:	DESCRIPTION
1	2	10538	BRG THRUST .625 ID X 1.125 OD X .0781
2	10	10588	SCREW DRIVE #2 x 1/4 HOLE SIZE .089
3	4	11165	WASHER THRUST .625 ID X 1.125 OD X .060
4	2	15731	RING O 1/16 X 1 ID X 1-1/8 OD
5	1	20166	PIN DOWEL 1/4 DIA X 1/2
6	1	27462	LABEL WARNING STICKER SINGLE POINT MACHINES
7	1	29152	PLATE MASS CE
8	2	33777	RING SNAP 1-3/16 ID (30MM)
9	30	35009	SCREW M6 X 1.0 X 20 SHCS
10	28	35504	SCREW M6 X 1.0 X 35mm SHCS
11	2	36087	SCREW M8 X 1.25 X 6MM SSSFP
12	2	43489	BALL NYLON 1/8 DIA
13	2	46286	LABEL CIRCULAR MILL CRUSH HAZARD
14	2	53365	SCREW M4 X 0.7 X 4 mm SSSFP
15	2	57581	SCREW 6MM DIA X 25MM X M5 X 0.8 SHLDCS
16	2	59039	LABEL WARNING LIFT POINT ROUND 1.5"
17	1	61980	TOOL ARM CM6200
18	1	62281	BEARING BLOCK BALLSCREW 20MM
19	1	62321	HOLDER FELT WIPER MILLING HEAD
20	12	62376	WASHER SPRING BELLEVILLE 1/8 ID X 1/4 OD X .013 THK
21	2	62378	ROD POLYURETHANE 1/4 DIA X 1/4 LENGTH 95 SHORE A
22	4	62379	SEAL FELT 16MM BALL SCREW 1.015 OD MILLING HEAD
23	1	62423	MOUNT BALL NUT MILLING HEAD
24	2	62888	LABEL DANGER PART LIFT POINT ONLY 2 X 3
25	1	62898	BRG RETAINING NUT 5/8-18 O-RING SEAL SETSCREW LOCK
26	2	62903	WASHER SHIM .75 ID 1.125 OD .062 THICK STEEL
27	1	62930	BALL SCREW 20MM RADIAL TRAVEL CM6200
28	1	62960	BALL SCREW NUT 20MM X 5MM LEAD LEFT HAND 33 MM OD EICHENBERGER ROUND
29	2	62961	SLIDE RAIL THK SHS25 880MM LG PRELOADED METAL SCRAPERS 2 BLOCKS
30	2	62964	LIFTING EYE M12 X 1.75 X 24 THREAD 30 ID 2270 LBS 1030 KG
31	1	62965	TAIL SUPPORT BALL SCREW RADIAL FEED
32	2	62969	SCREW 3/4-10 X 3/4 BHSCS
33	3	64133	GUIDE WIRE ROPE 3/8"
34	1	64156	LABEL COUNTERWEIGHT & ARM POSITION CM6200
35	30	68501	CAP RAIL 25MM METAL THK SHS
36	1	70228	LABEL CLIMAX LOGO 3.5 X 12.5
37	1	72262	ZIMMER BRAKE 25mm RAIL
38	1	72675	PLATE RADIAL TRAVEL CM6200
39	1	72869	ADAPTER BRAKE 25mm RAIL 4mm THICK

ABBILDUNG A-12. TEILELISTE FRÄSARMEINHEI (P/N 72676)

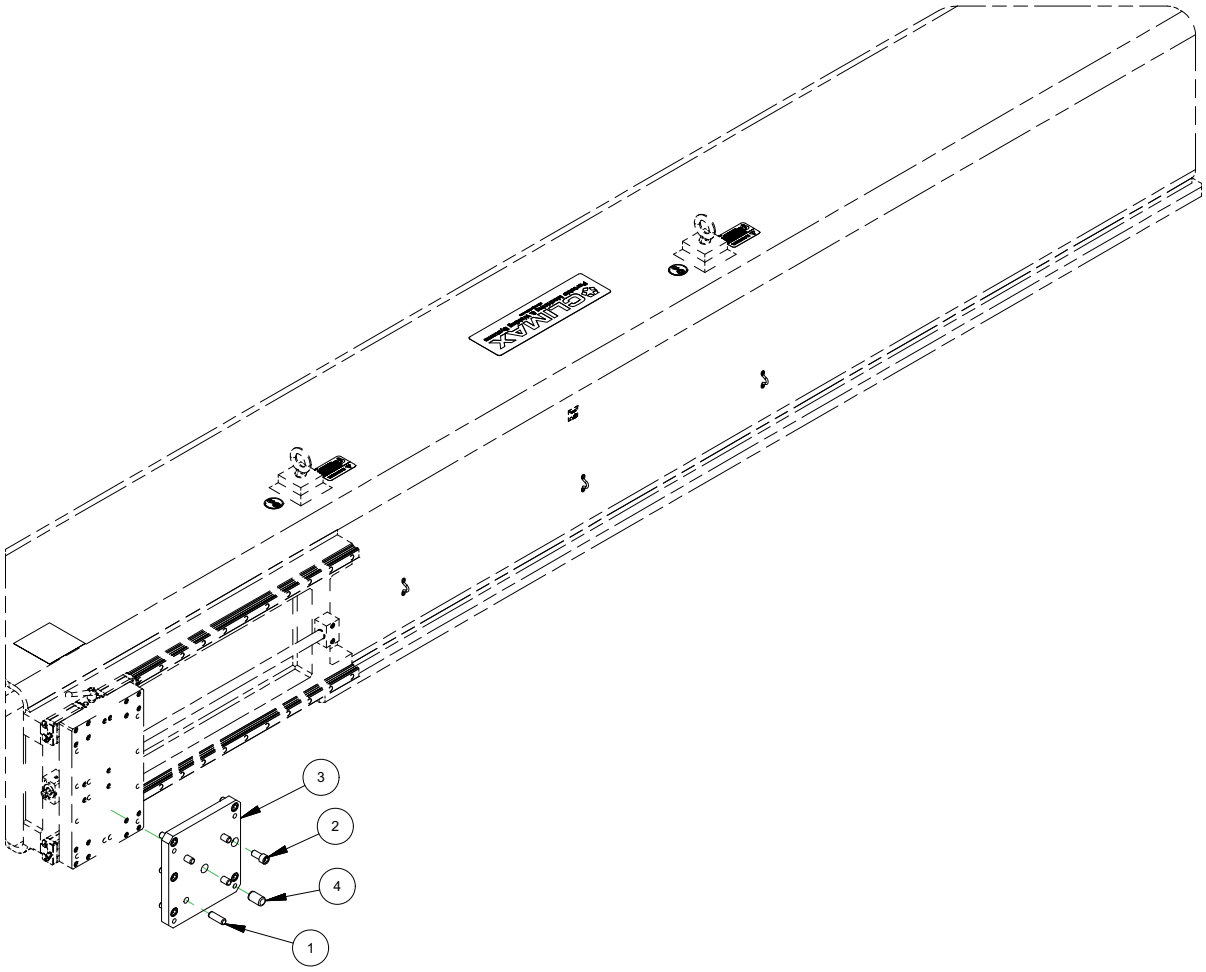

PARTS LIST			
ITEM	QTY	PART No.	DESCRIPTION
1	4	11832	PIN DOWEL 1/2 DIA X 1-1/2
2	6	42094	SCREW M12 X 1.75 X 25mm SHCS
3	1	62921	PLATE MILL TRAMMING CM6200
4	1	63557	PIN DOWEL 3/4 DIA X 1-1/4

ABBILDUNG A-13. FRÄS-SCHNEIDEKOPF-UMSETZEINHEIT (P/N 63124)

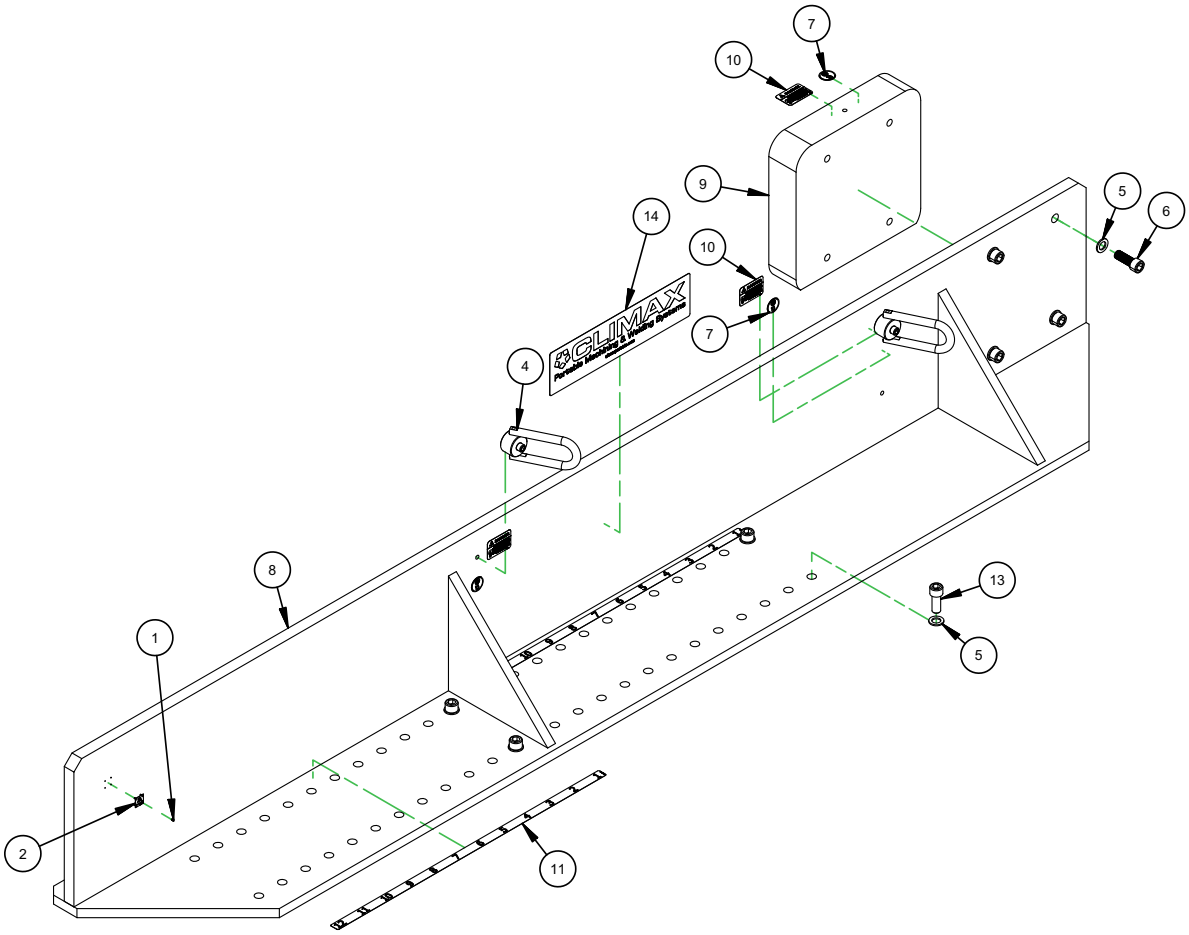

PARTS LIST			
ITEM	QTY	P/N:	DESCRIPTION
1	4	10588	SCREW DRIVE #2 x 1/4 HOLE SIZE .089
2	1	29152	PLATE MASS CE
4	2	43001	HOIST SWIVEL RING M12 X 1.75 1050 KG
5	8	57888	WASHER FIXTURING 21MM ID X 35MM OD X 3MM CASE HARDENED
6	4	58743	SCREW M20 X 2.5 X 55mm SHCS
7	3	59039	LABEL WARNING LIFT POINT ROUND 1.5"
8	1	62059	ARM COUNTERWEIGHT CM6200
9	1	62060	COUNTERWEIGHT CM6200
10	3	62888	LABEL DANGER PART LIFT POINT ONLY 2 X 3
11	2	64156	LABEL COUNTERWEIGHT & ARM POSITION CM6200
13	4	40459	SCREW M20 X 2.5 X 50 mm SHCS
14	1	70229	LABEL CLIMAX LOGO 4.75 X 18

ABBILDUNG A-14. GEGENGEWICHTSARMEINHEIT (P/N 62031)

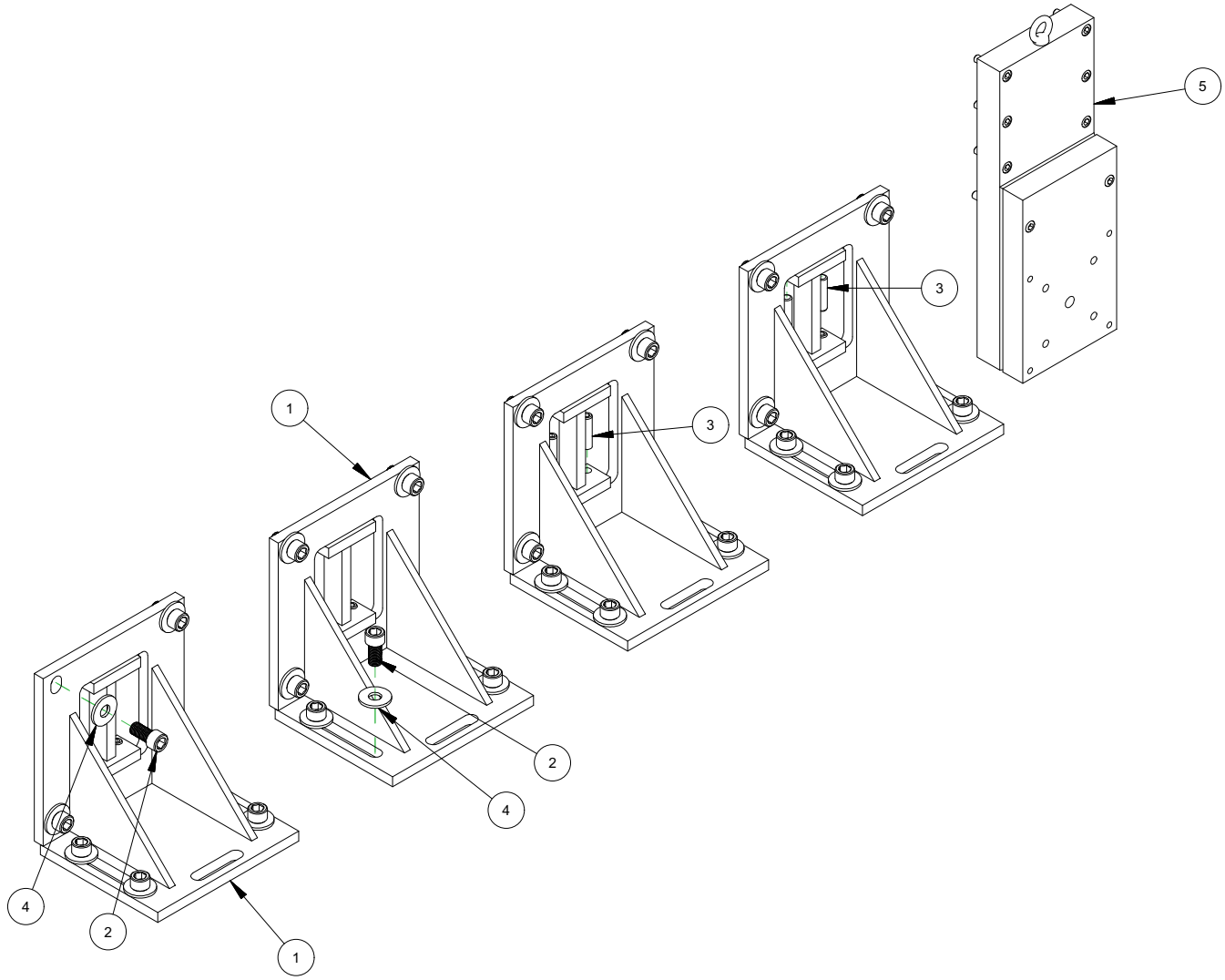

5	1	65840	ASSY EXTENSION MILLING HEAD
4	32	12339	WASHER 3/4 FLATW
3	16	57348	SCREW M16 X 2 X 60mm SSSFP
2	32	58203	SCREW M20 X 2.5 X 40MM SHCS
1	4	62887	BRACKET FACE MOUNT CM6200
ITEM	QTY	PART No.	DESCRIPTION
PARTS LIST			

ABBILDUNG A-15. FLANSCHMONTAGESATZ (P/N 63106)

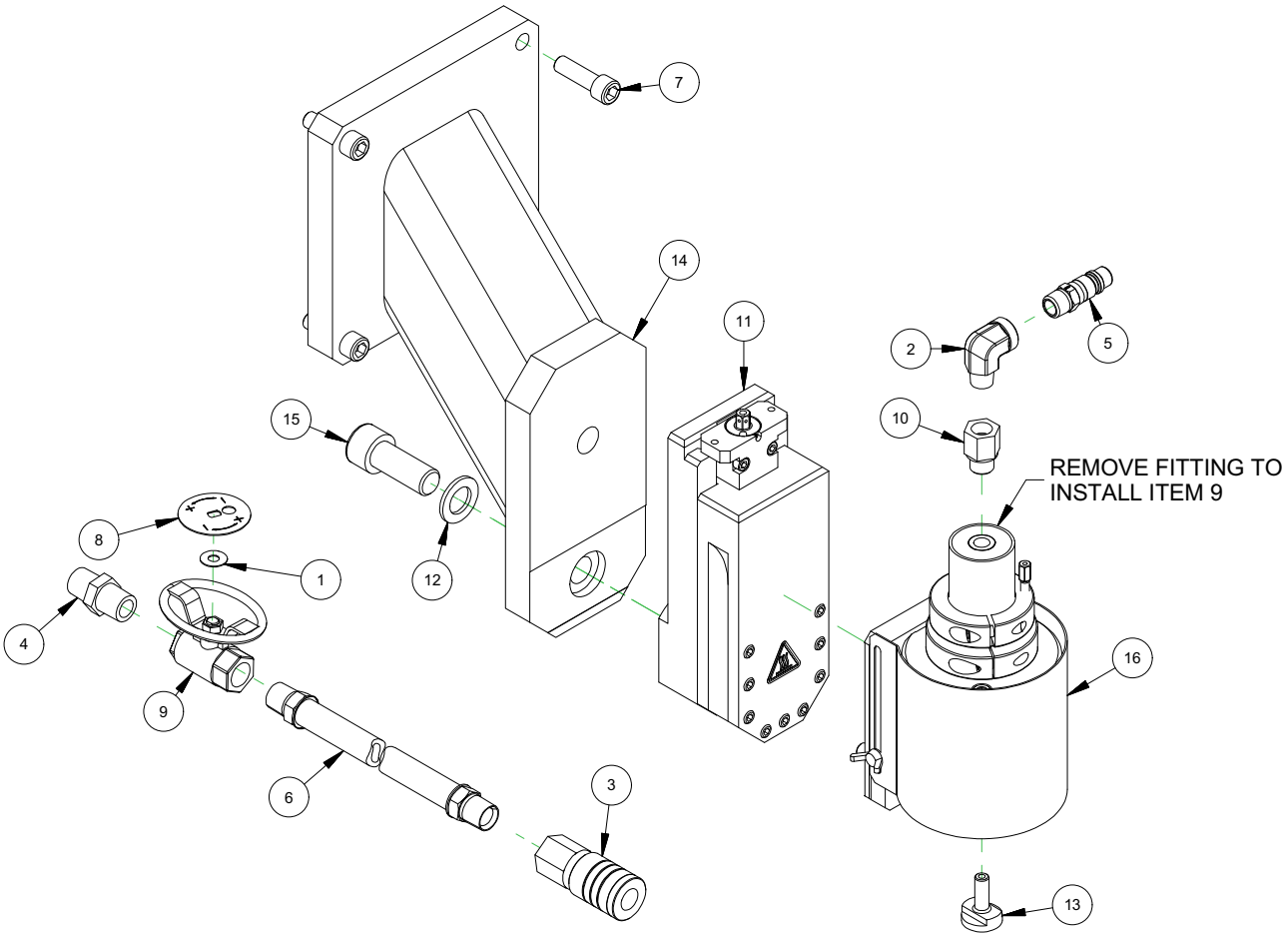

PARTS LIST			
ITEM	QTY	PART No.	DESCRIPTION
1	1	10770	WASHER THRUST .75 OD X .312 ID X .03
2	1	11132	FTG ELBOW 3/8 NPTM X 3/8 NPTF STREET 90 DEG
3	1	13208	FTG QUICK COUPLER 1/2B 1/2NPTF FEMALE AIR
4	1	14704	FTG NIPPLE 1/2NPTM CLOSE HEX
5	1	16615	FTG QUICK COUPLER 1/2B 3/8 NPTM MALE AIR
6	1	32196	HOSE ASSY 801 1/2 X 1/2 NPTMS ENDS X 180
7	4	35215	SCREW M12 X 1.75 X 40mm SHCS
8	1	35772	LABEL DIRECTION OVAL HANDLE BALL VALVE
9	1	36328	VALVE BALL 1/2NPTF OVAL HANDLE
10	1	52734	FTG ADPTER 3/8 BSPP MALE X 3/8 NPTF
11	1	57781	TOOL HEAD ASSY FF LINE
12	1	57888	WASHER FIXTURING 21MM ID X 35MM OD X 3MM CASE HARDENED
13	1	62624	ARBOR GRINDING WHEEL CBN 10MM SHANK M8 THREAD
14	1	62984	ADAPTER SINGLE POINT TOOL HEAD TO MILLING ARM
15	1	63018	SCREW M20 X 1.5 X 50MM SHCS
16	1	63063	ASSY GRINDING ATTACHMENT

ABBILDUNG A-16. SCHLEIFVORSATZ MIT WERKZEUGKOPF (P/N 63239)

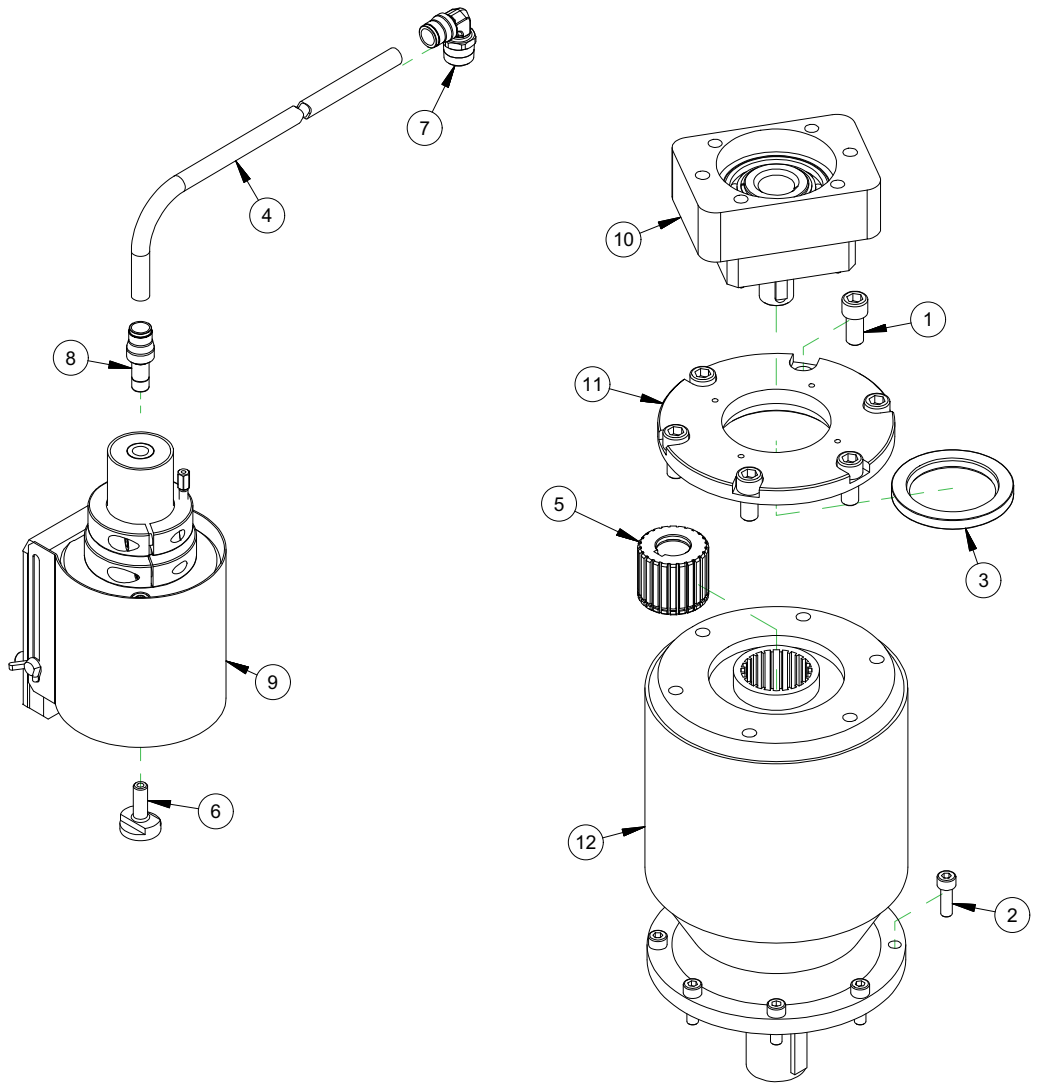

PARTS LIST			
ITEM	QTY	PART No.	DESCRIPTION
1	6	42094	SCREW M12 X 1.75 X 25mm SHCS
2	8	42494	SCREW M8 X 1.25 X 25mm SHCS
3	1	44964	SEAL OIL 60 x 85 x 8 DOUBLE LIP
4	130	48281	TUBING PARFLEX 1/2 OD X 3/8 ID POLYURETHANE BLACK X 130"
5	1	51928	SPLINE COUPLING BREVINI
6	1	62624	ARBOR GRINDING WHEEL CBN 10MM SHANK M8 THREAD
7	1	62681	FTG ELBOW 1/2 NPTM x 1/2 O.D. PRESTOLOK TUBING
8	1	62682	FTG ADAPTER 12MM TUBE X 1/2 PRESTOLOK TUBING
9	1	63063	ASSY GRINDING ATTACHMENT
10	1	63072	ASSY TORQUE LIMITER 24 MM OUTPUT
11	1	63714	FLANGE ADAPTER BREVINI UNIVERSAL TO NEMA 42
12	1	63731	REDUCER 162.8:1 PLANETARY

ABBILDUNG A-17. SCHLEIFKOPF FÜR SP CM6200 MIT UNTERSETZUNGSGETRIEBE (P/N 63240)

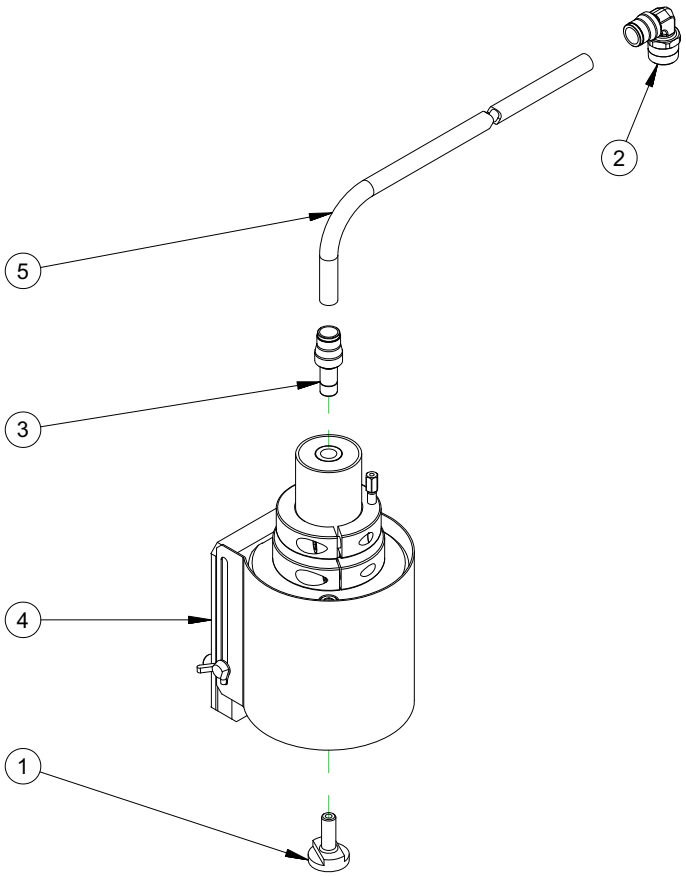

PARTS LIST			
ITEM	QTY	P/N:	DESCRIPTION
1	1	62624	ARBOR GRINDING WHEEL CBN 10MM SHANK M8 THREAD
2	1	62681	FTG ELBOW 1/2 NPTM x 1/2 O.D. PRESTOLOK TUBING
3	1	62682	FTG ADAPTER 12MM TUBE X 1/2 PRESTOLOK TUBING
4	1	63063	ASSY GRINDING ATTACHMENT
5	130IN	79025	TUBING PARFLEX 1/2 OD X .328 ID POLYURETHANE BLACK

ABBILDUNG A-18. SCHLEIFKOPF FÜR SP, PNEUMATISCH (P/N 62537)

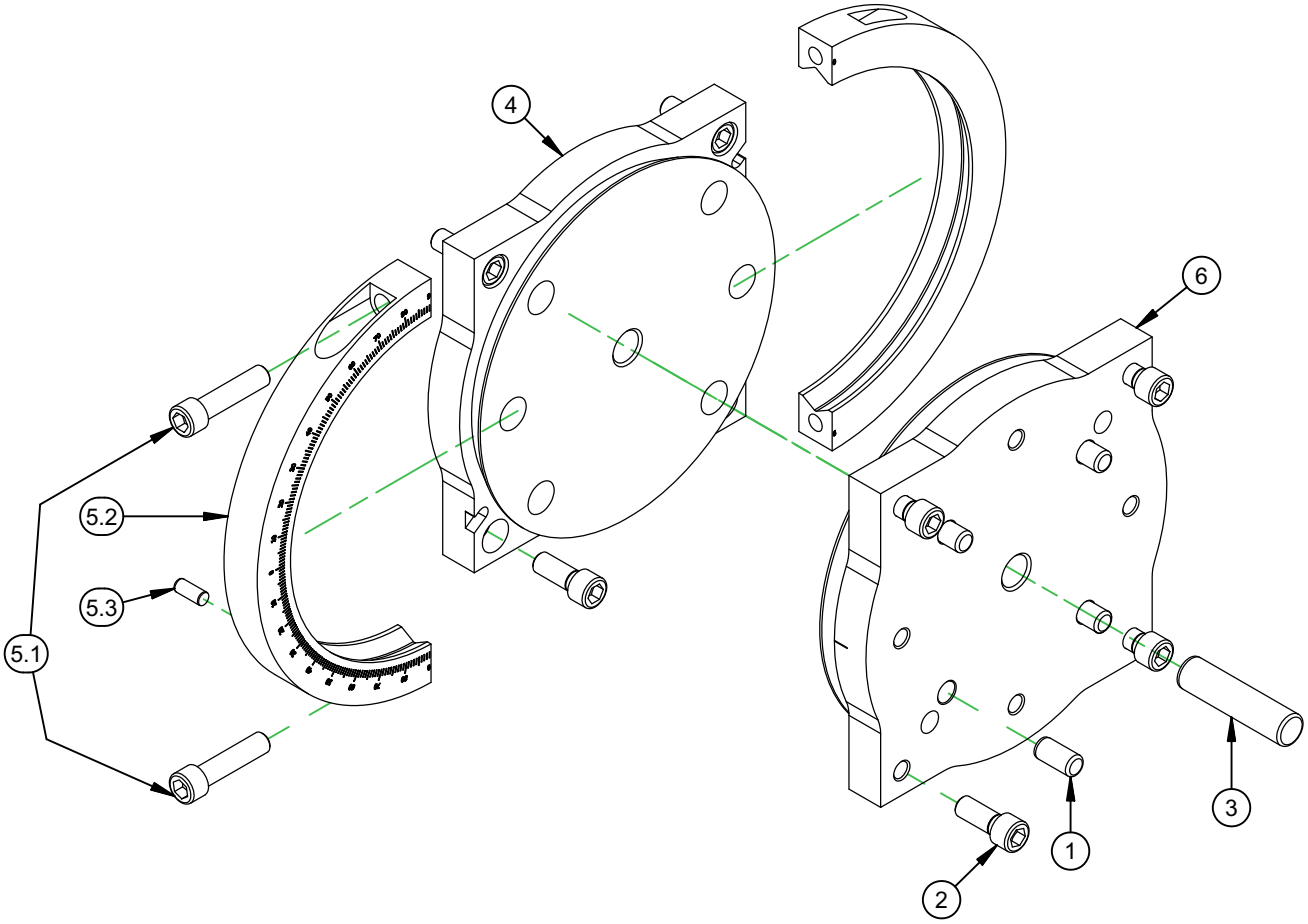

PARTS LIST			
ITEM	QTY	P/N:	DESCRIPTION
1	4	20398	PIN DOWEL 1/2 DIA X 1
2	8	40697	SCREW M12 X 1.75 X 30mm SHCS
3	1	46981	PIN DOWEL 3/4 DIA X 3
4	1	53624	PLATE SWIVEL MILLING HEAD RAM SIDE
5.1	2	64281	SCREW M12 X 1.75 X 50MM SHCS
5.2	1	74224	RING CLAMP SWIVEL PLATE MILLING HEAD METRIC
5.3	1	16540	PIN DOWEL 5/16 DIA X 3/4
6	1	74250	PLATE SWIVEL MILLING HEAD QUILL SIDE METRIC

ABBILDUNG A-19. PLATTENSCHWENK-FRÄSKOPFEINHEIT (P/N 63250)

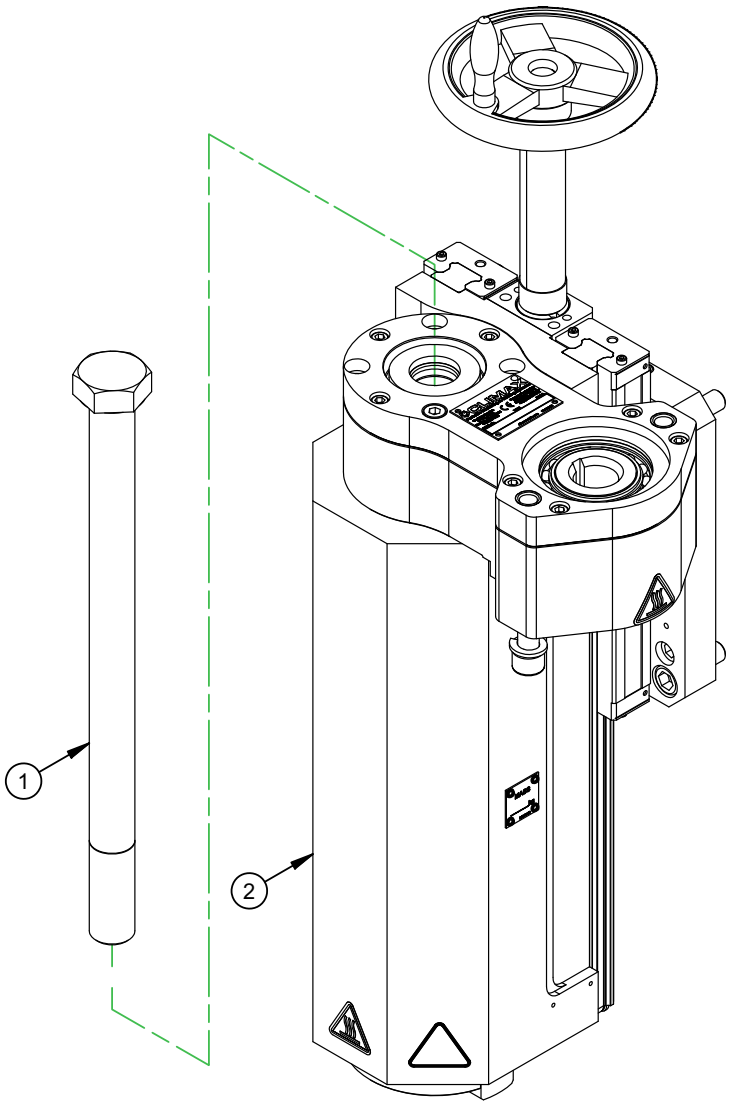

PARTS LIST			
ITEM	QTY	P/N:	DESCRIPTION
1	1	62330	DRAWBOLT 1"-8 X 14.5 (INCH NMTB)
		62331	DRAWBOLT M24X3 X 14.5 (METRIC NMTB)
		62845	DRAWBOLT 1"-8 X 15.5 (INCH V-FLANGE)
		62846	DRAWBOLT M24X3 X 15.5 (METRIC V-FLANGE)
2	1	72277	MILLING HEAD 2-29/32 BRG 8 STROKE #50 TAPER

COMPLETE ASSY (MILLING HEAD W/DRAWBOLT)	
P/N	CONFIGURATION
62282	MILLING HEAD 8 STROKE #50 TAPER INCH NMTB
62734	MILLING HEAD 8 STROKE #50 TAPER INCH V-FLANGE
62644	MILLING HEAD 8 STROKE #50 TAPER METRIC NMTB
62735	MILLING HEAD 8 STROKE #50 TAPER METRIC V-FLANGE

ABBILDUNG A-20. FRÄSKOPF UND ZUGBOLZEN, SAT (P/N 73354)

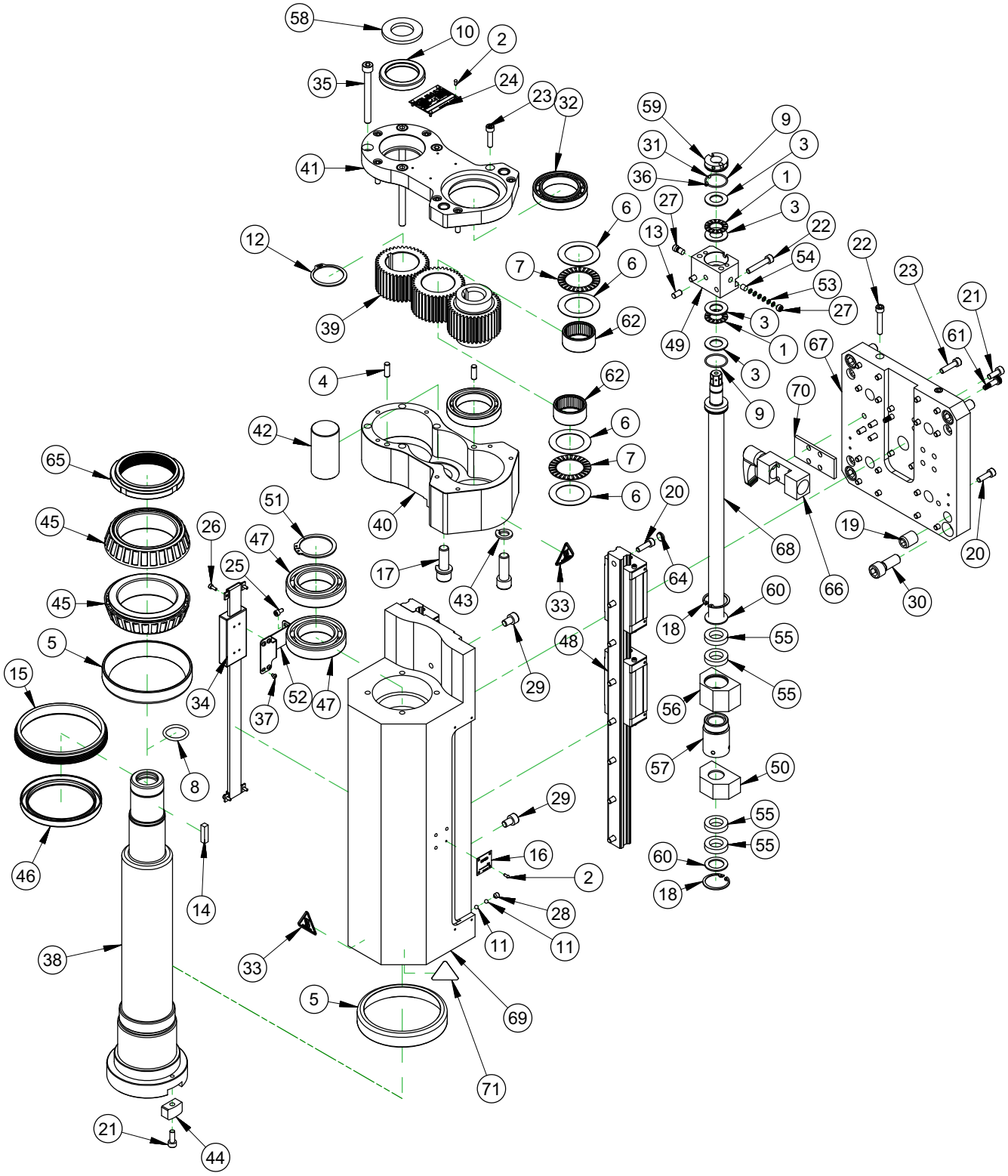

ABBILDUNG A-21. FRÄSKOPF 2-29/32 BRG 8 HUB #50 VERJÜNG (P/N 72277)

PARTS LIST			
ITEM	QTY	P/N:	DESCRIPTION
1	2	10538	BRG THRUST .625 ID X 1.125 OD X .0781
2	8	10588	SCREW DRIVE #2 x 1/4 HOLE SIZE .089
3	4	11165	WASHER THRUST .625 ID X 1.125 OD X .060
4	2	11729	PIN DOWEL 1/4 DIA X 3/4
5	2	11821	BRG CUP 4.4375 OD X .750 WIDE
6	4	15326	WASHER THRUST 1.375 ID X 2.062 OD X .030
7	2	15327	BRG THRUST 1-375 ID X 2.062 OD X .0781
8	1	15509	RING O 1/8 X 1 ID X 1-1/4 OD
9	2	15731	RING O 1/16 X 1 ID X 1-1/8 OD
10	1	15768	SEAL 1.625 ID X 2.250 OD X .313
11	4	16594	BALL NYLON 3/16 DIA
12	1	19505	RING SNAP 1-5/8 OD .062 WIDE
13	1	20166	PIN DOWEL 1/4 DIA X 1/2
14	1	20273	KEY 1/4 SQ X 1.00 SQ BOTH ENDS
15	1	28219	NUT MAIN BRG PRELOAD
16	1	29152	PLATE MASS CE
17	2	30207	SCREW M12 X 1.75 X 35mm SHCS
18	2	33777	RING SNAP 1-3/16 ID (30MM)
19	4	34643	SCREW M16 X 1.5 X 20mm SSSFP
20	32	35009	SCREW M6 X 1.0 X 20 SHCS
21	6	35014	SCREW M6 X 1.0 X 16mm SHCS
22	4	35504	SCREW M6 X 1.0 X 35mm SHCS
23	11	35652	SCREW M6 X 1.0 X 25 SHCS
24	1	35828	PLATE SERIAL YEAR MODEL CE 1.5 X 2.0
25	2	35910	SCREW M4 X 0.7 X 8MM SHCS
26	4	35994	SCREW M3 X 0.5 X 8mm SHCS
27	2	36087	SCREW M8 X 1.25 X 6MM SSSFP
28	2	36150	SCREW M6 X 1.0 X 6mm SSSCP
29	2	36545	SCREW M8 X 1.25 X 12mm
30	4	40697	SCREW M12 X 1.75 X 30mm SHCS
31	2	43489	BALL NYLON 1/8 DIA
32	2	46352	BRG BALL 1.7717 ID X 2.6772 OD X .4724 W/ 2 SEALS
33	2	46902	LABEL WARNING HOT SURFACE GRAPHIC 2.25 TRI
34	1	51859	SCALE DIGITAL 8 INCH VERTICAL MOUNT
35	4	52936	SCREW M8 X 1.25 X 80MM SHCS

ABBILDUNG A-22. TEILELISTE FRÄSKOPFEINHEIT 1 (P/N 72277)

PARTS LIST			
ITEM	QTY	P/N:	DESCRIPTION
36	2	53365	SCREW M4 X 0.7 X 4 mm SSSFP
37	4	54024	SCREW M3 X 0.5 X 4MM BHSCS
38	1	60462	SPINDLE BLOCK 2.75 BRG 8 STROKE #50 TAPER
39	1	60467	GEAR SET 40T 16DP 2.5PD THREE GEARS BLOCK SPINDLE 2.75 BRG
40	1	60468	HOUSING GEARBOX BLOCK SPINDLE 2.75 BRG
41	1	60469	COVER GEARBOX BLOCK SPINDLE 2.75 BRG
42	1	60470	SHAFT GEAR BLOCK SPINDLE 2.75 BRG
43	2	60702	WASHER SPLIT LOCK M12
44	2	60704	LUG DRIVE #50 TAPER BLOCK SPINDLE
45	2	60705	BRG CONE 2.75 ID X 1.00 WIDE
46	1	60706	SEAL 3.25 ID X 4.000 OD X .375
47	2	60793	BRG BALL 1.7717 ID X 2.9528 OD X .6299
48	2	62255	SLIDE RAIL THK SHS25 442MM LG PRELOADED METAL SCRAPERS 2 BLOCKS
49	1	62281	BEARING BLOCK BALLSCREW 20MM
50	1	62321	HOLDER FELT WIPER MILLING HEAD
51	1	62322	RING SNAP 1.771 OD (45MM)
52	1	62324	BRACKET DRO BLOCK SPINDLE 2.75 BRG
53	12	62376	WASHER SPRING BELLEVILLE 1/8 ID X 1/4 OD X .013 THK
54	2	62378	ROD POLYURETHANE 1/4 DIA X 1/4 LENGTH 95 SHORE A
55	4	62379	SEAL FELT 16MM BALL SCREW 1.015 OD MILLING HEAD
56	1	62423	MOUNT BALL NUT MILLING HEAD
57	1	62426	BALL SCREW NUT 20MM X 5MM LEAD 33 MM OD EICHENBERGER ROUND
58	1	62696	WASHER 1 FLTW ASTM F436
59	1	62898	BRG RETAINING NUT 5/8-18 O-RING SEAL SETSCREW LOCK
60	2	62903	WASHER SHIM .75 ID 1.125 OD .062 THICK STEEL
61	2	62909	SCREW 6MM DIA X 12MM X M5 X 0.8 SHLDCS
62	2	63437	BRG NEEDLE 1-3/8 ID X 1-5/8 OD X .750 OPEN
63	1	63927	HANDWHEEL ASSY Z-AXIS (NOT SHOWN)
64	16	68501	CAP RAIL 25MM METAL THK SHS
65	1	68623	NUT LOCKING MODIFIED 2.751-18 FLEXIBLE INSERT LOCKING
66	1	72262	ZIMMER BRAKE 25mm RAIL
67	1	72279	PLATE MOUNTING BLOCK SPINDLE 2.75 BRG
68	1	72283	BALL SCREW MILLING HEAD 2.75 BRG 8" STROKE
69	1	72652	HOUSING SPINDLE 2.9062 BRG 8 STROKE
70	1	72869	ADAPTER BRAKE 25mm RAIL 4mm THICK
71	1	80510	LABEL WARNING CUTTING OF FINGERS/ROTATING BLADE

ABBILDUNG A-23. TEILELISTE FRÄSKOPFEINHEIT 2 (P/N 72277)

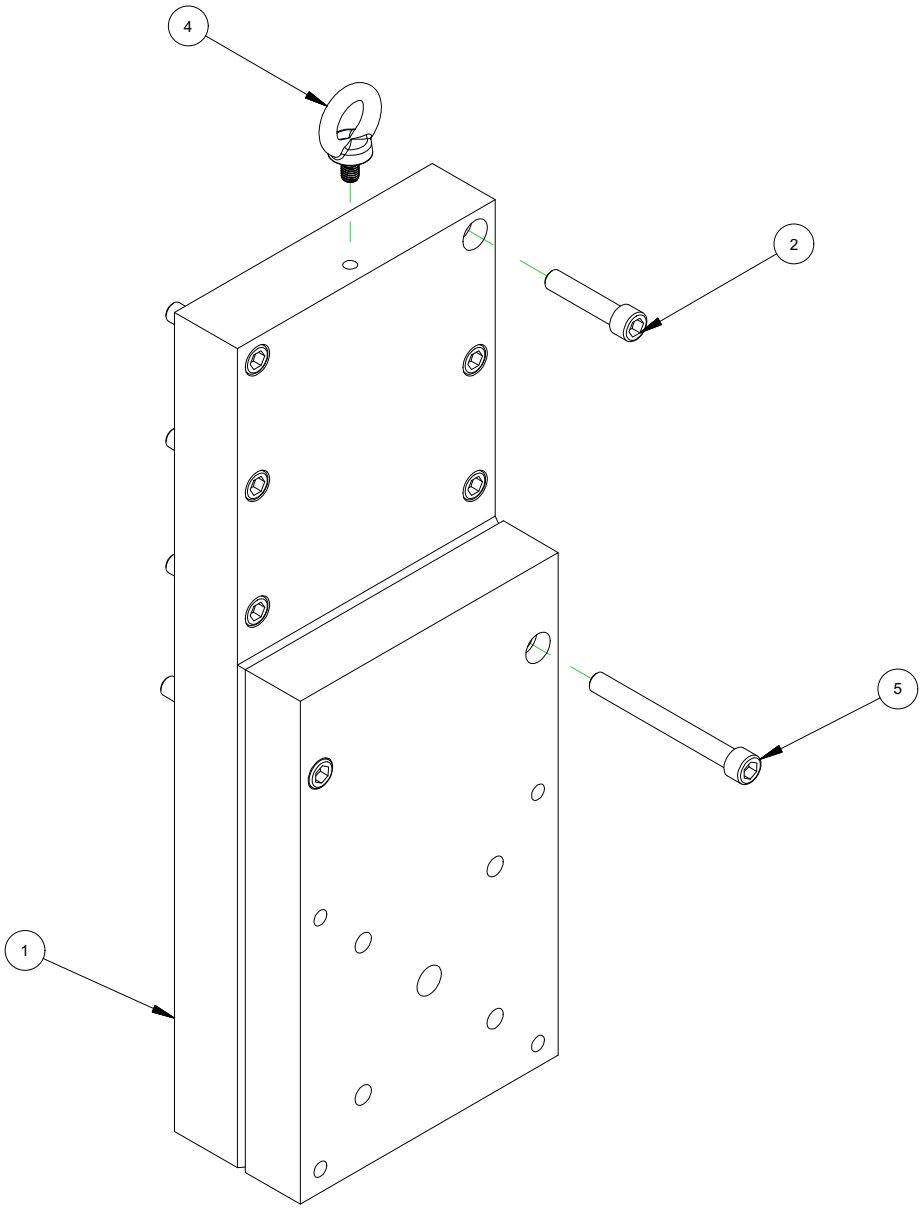

5	2	61164	SCREW M12 X 1.75 X 110 MM SHCS
4	1	59625	BOLT EYE M10 X 1.5 X 17MM LG
2	6	46078	SCREW M12 X 1.75 X 55 SHCS
1	1	65839	EXTENSION MILLING HEAD
ITEM	QTY	PART No.	DESCRIPTION
PARTS LIST			

ABBILDUNG A-24. FRÄSKOPFVERLÄNGERUNG, SATZ (P/N 65840)

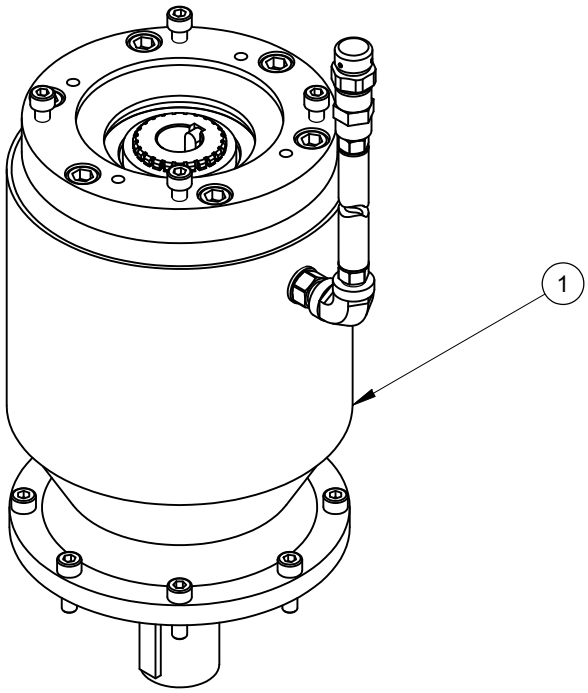

PARTS LIST			
ITEM	QTY	P/N:	DESCRIPTION
1	1	62032	ASSY SERVO DRIVE GEARBOX CM6200

ABBILDUNG A-25. SERVOANTRIEBSEINHEIT (P/N 83156)

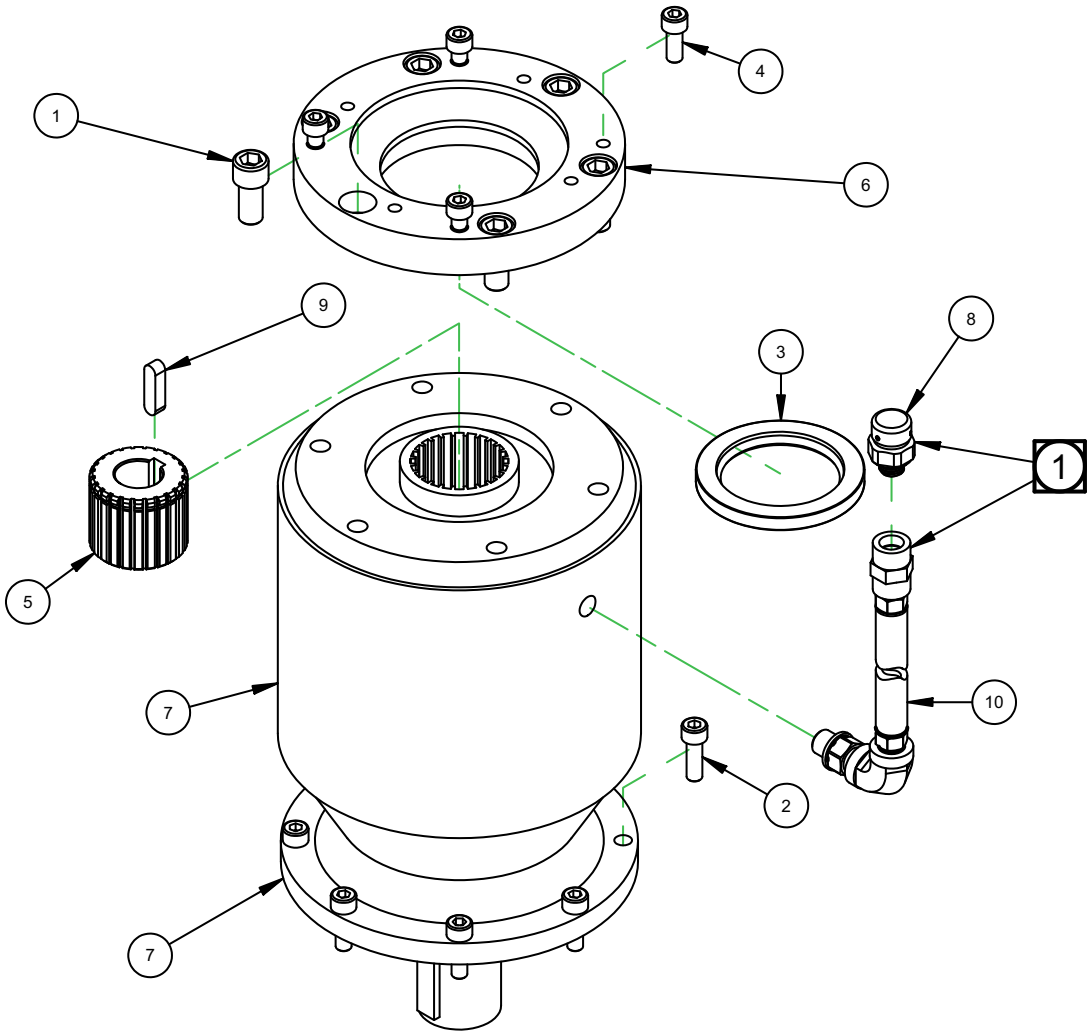

NOTE:

1 REMOVE BREATHER SUPPLIED WITH GEARBOX, INSTALL VENT LINE ASSY 69351, AND ASSEMBLE TO END FITTING

PARTS LIST			
ITEM	QTY	P/N:	DESCRIPTION
1	6	42094	SCREW M12 X 1.75 X 25mm SHCS
2	8	42494	SCREW M8 X 1.25 X 25mm SHCS
3	1	44964	SEAL OIL 60 x 85 x 8 DOUBLE LIP
4	4	50458	SCREW M8 X 1.25 X 20mm SHCS
5	1	51928	SPLINE COUPLING BREVINI
6	1	51930	FLANGE ADAPTER 110mm PILOT SPECIAL DRILLING
7	1	63731	REDUCER 162.8:1 PLANETARY
8	1	-	FACTORY SUPPLIED BREATHER
9	1	68823	KEY 8mm X 7mm X 30mm RADIUS BOTH ENDS
10	1	69351	ASSY GEARBOX VENT LINE

ABBILDUNG A-26. SERVOANTRIEBSEINHEIT (P/N 62032)

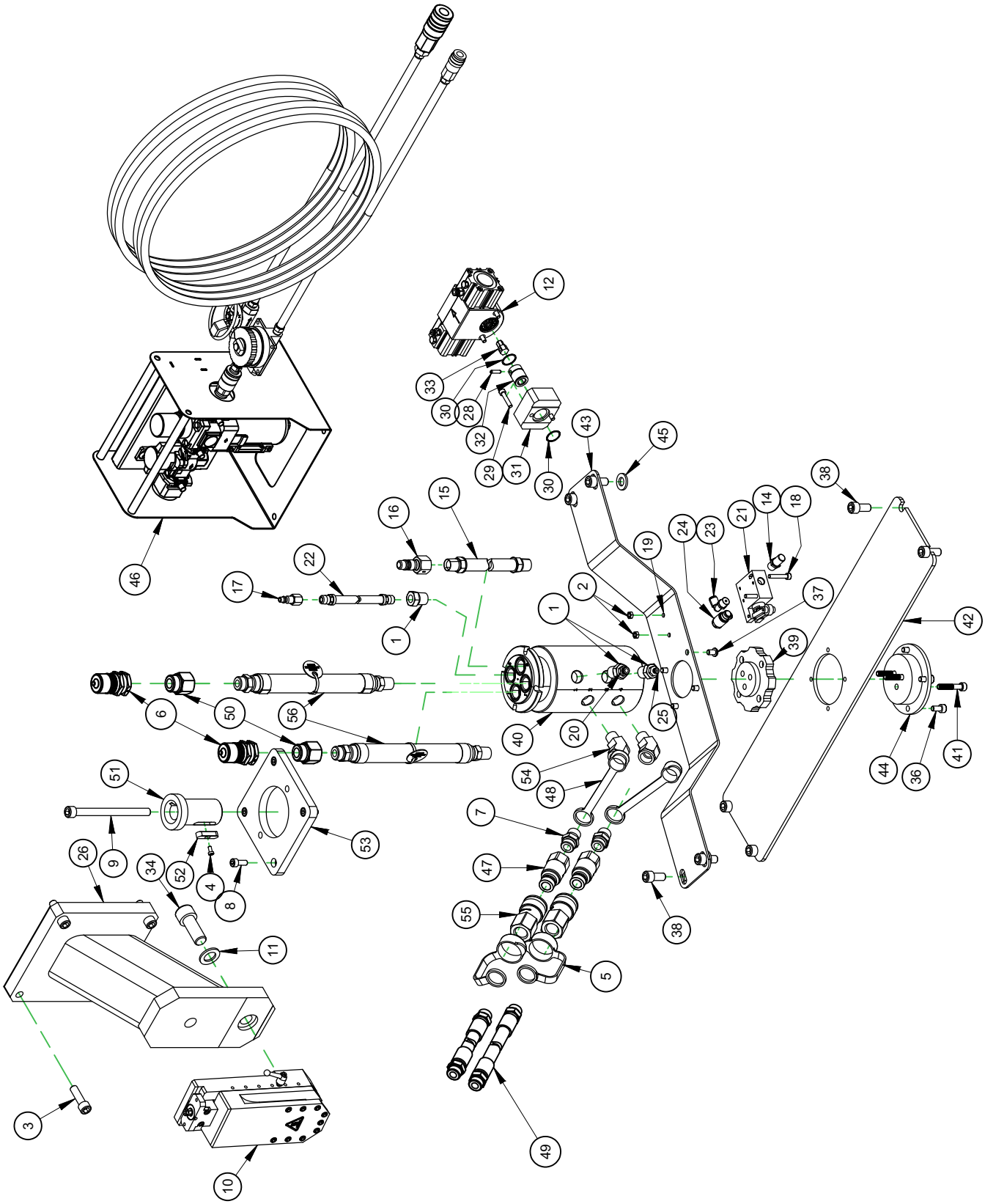

ABBILDUNG A-27. EINPUNKT-EINHEIT (P/N 83100)

PARTS LIST			
ITEM	QTY	P/N:	DESCRIPTION
1	3	12920	FTG REDUCER BUSHING 1/2 NPTM X 1/4 NPTF STEEL
2	2	20772	NUT M6 X 1.0 STDN ZINC PLATED
3	4	35215	SCREW M12 X 1.75 X 40mm SHCS
4	1	35916	SCREW M5 X 0.8 X 10MM SHCS
5	2	39241	DUST CAP 1/2 COUPLER 1SO 16028
6	2	40612	FTG QD NIPPLE 3/4B X SAE-12F
7	2	46944	FTG ADAPTER 1/2 NPTF MALE X 7/8-14 W/ O-RING
8	4	50458	SCREW M8 X 1.25 X 20mm SHCS
9	1	50907	SCREW M12 X 1.75 X 150mm SHCS
10	1	57781	TOOL HEAD ASSY FF LINE
11	1	57888	WASHER FIXTURING 21MM ID X 35MM OD X 3MM CASE HARDENED
12	1	58671	FEED BOX PNEUMATIC REMOTE FEED ADJUST
13	1	59244	PLUMBING PNEUMATIC FEED ASSY
14	1	13641	FTG MUFFLER 1/4 NPTM
15	1	15625	HOSE ASSY 801 1/2 X 1/2 NPTMS ENDS X 12
16	1	24851	FTG QUICK COUPLER 1/2B 1/2 NPTF MALE AIR
17	1	28493	QUICK COUPLER 1/4B MALE 1/4 NPTF
18	2	35504	SCREW M6 X 1.0 X 35mm SHCS
19	2	35891	WASHER M6 FLTW DIN 125
20	1	51263	FTG ADAPTER 1/4 NPTM X 1/4 TUBE F PRESTOLOCK NICKEL PLATED
21	1	59318	VALVE 2-POSITION 3-WAY NORMALLY OPEN
22	1	59341	HOSE ASSY 801 1/4 X 1/4 NPTM ENDS X 12
23	1	59342	FTG ELBOW 1/4 NPTMS X 1/4 TUBE F PRESTOLOCK NICKEL PLATED
24	1	60669	VALVE 1/4 NPTM X 1/4 TUBE F PRESTOLOCK FLOW CONTROL RIGHT ANGLE METERED AT 5 SCFM
25	1	63083	FTG ADAPTER 1/8 TUBE F PRESTOLOCK X 1/4 NPTM STRAIGHT
26	1	62984	ADAPTER SINGLE POINT TOOL HEAD TO MILLING ARM
27	1	62994	ASSY ADAPTER FEEDBOX CM6200
28	1	10850	PIN ROLL 3/16 DIA X 3/4
29	2	35505	SCREW M6 X 1.0 X 30 SHCS
30	2	39074	RING SNAP 7/8 OD SPIRAL MED DUTY
31	1	62985	PLATE FEEDBOX ADAPTER CM6200
32	1	62986	SHAFT FEEDBOX ADAPTER INNER CM6200
33	1	62988	SHAFT FEEDBOX ADAPTER OUTER CM6200
34	1	63018	SCREW M20 X 1.5 X 50MM SHCS
35	1	63121	ASSY ROTARY UNION CM6200
36	4	13787	SCREW M8 X 1.25 X 16mm
37	4	21769	5/16-18 X 1/2 BHSCS
38	8	42094	SCREW M12 X 1.75 X 25mm SHCS
39	1	58039	CAM FEED
40	1	58751	UNION ROTARY HYDRAULIC 4 CHANNEL 1/2 NPTF PORTS MOD
41	3	59349	SCREW M8 X 1.25 X 45MM SHCS
42	1	62891	MOUNT ROTARY UNION CM6200
43	1	62893	RESTRAINT TORQUE ROTARY UNION CM6200
44	1	62894	SPACER ROTARY UNION CM6200
45	4	62978	WASHER M12 FLTW 27MM OD 3.1 MM THICK
46	1	63156	AIR CONTROL ASSY FOR PNEUMATIC FEED 50 FT
47	2	63427	FTG QD NIPPLE 1/2B ISO 16028 STYLE X SAE-10F
48	2	63428	DUST CAP QD NIPPLE 1/2B ISO 16028 STYLE RUBBER
49	2	63675	HOSE ASSY 451 1/2 X SAE-10M X 36 STRAIGHT FITTINGS CE
50	2	63682	FTG ADAPTER SAE-12M X SAE-10F
51	1	63774	ADAPTER SINGLE POINT DRIVE SHAFT
52	1	63782	KEY 8MM X 12MM X 40MM RADIUS BOTH ENDS WITH CB HOLE
53	1	63784	PLATE ADAPTER HYD MOTOR TO DRIVE ASSY
54	2	64901	FTG ELBOW 1/2 NPTM X 1/2 NPTF ST 45 DEG
55	2	69486	FTG QD COUPLER 1/2B ISO 16028 X SAE-10F
56	2	83120	HOSE ASSY 1/2" 451TC X SAE-10 TO 1/2 NPTM X 12 INCHES CE

ABBILDUNG A-28. TEILELISTE EINPUNKT-EINHEIT (P/N 83100)

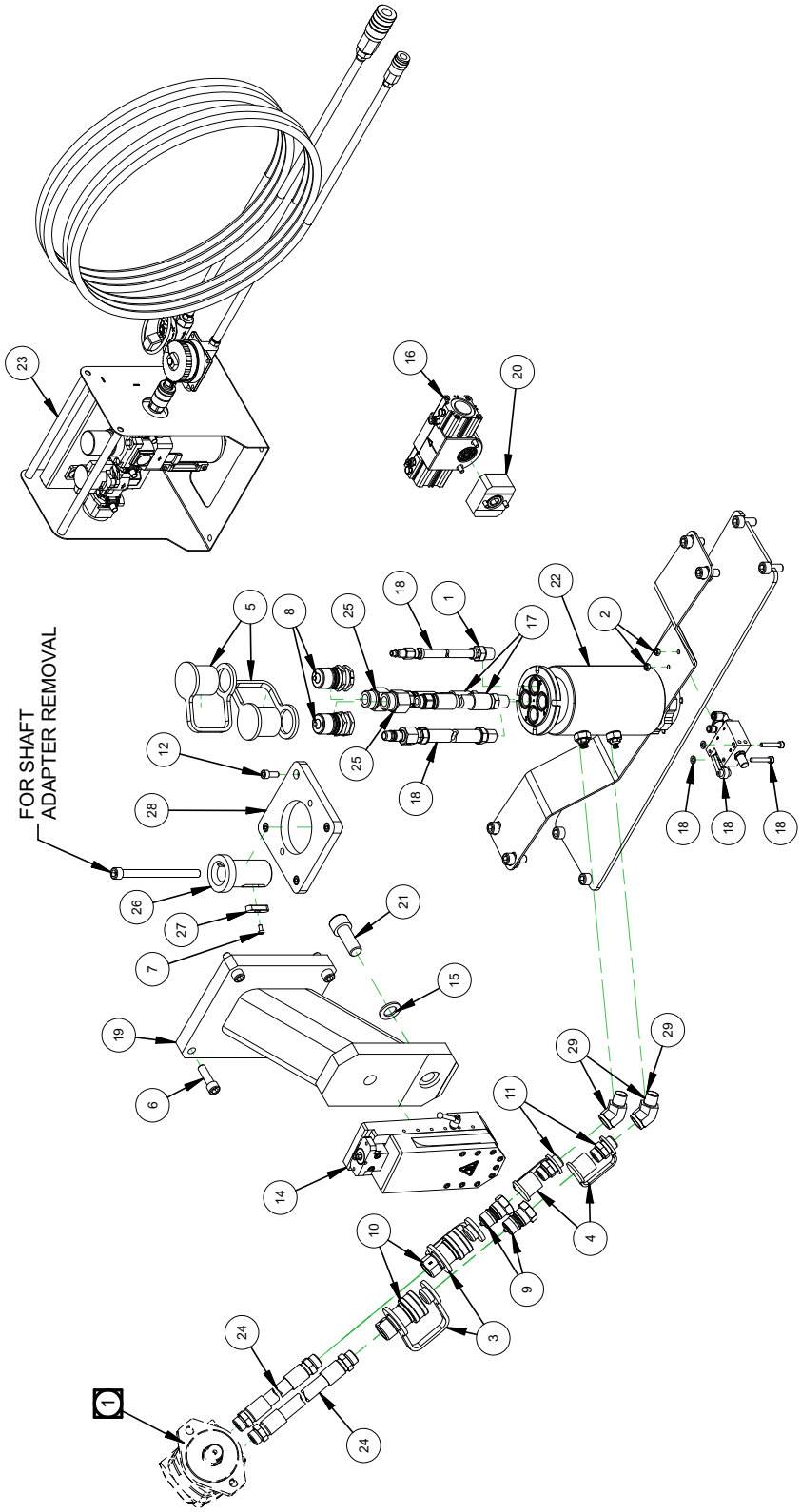

ABBILDUNG A-29. SINGLE-POINT-MONTAGE (P/N 62037)

PARTS LIST			
ITEM	QTY	PART No.	DESCRIPTION
1	3	12920	FTG REDUCER BUSHING 1/2 NPTM X 1/4 NPTF STEEL
2	2	20772	NUT M6 X 1.0 STDN ZINC PLATED
3	2	27977	FTG DUST PLUG 1/2 QD COUPLER
4	2	27978	FTG DUST CAP 1/2 MALE QUICK COUPLING
5	2	29561	FTG DUST CUP 60 SERIES 3/4 MALE QUICK CONNECT
6	4	35215	SCREW M12 X 1.75 X 40mm SHCS
7	1	35916	SCREW M5 X 0.8 X 10MM SHCS
8	2	40612	FTG QD NIPPLE 3/4B X SAE-12F
9	2	40614	FTG QUICK COUPLER MALE 1/2B X SAE-10F
10	2	40615	FTG QUICK COUPLER FEMALE 60 SERIES 1/2B X SAE-10F
11	2	46944	FTG ADAPTER 1/2 NPTF MALE X 7/8-14 W/ O-RING
12	4	50458	SCREW M8 X 1.25 X 20mm SHCS
13	1	50907	SCREW M12 X 1.75 X 150mm SHCS
14	1	57781	TOOL HEAD ASSY FF LINE
15	1	57888	WASHER FIXTURING 21MM ID X 35MM OD X 3MM CASE HARDENED
16	1	58671	FEED BOX PNEUMATIC REMOTE FEED ADJUST
17	2	59240	HOSE ASSY 451 1/2 X SAE-10M TO 1/2 NPTM X 12 STRAIGHT FITTINGS
18	1	59244	PLUMBING PNEUMATIC FEED ASSY
19	1	62984	ADAPTER SINGLE POINT TOOL HEAD TO MILLING ARM
20	1	62994	ASSY ADAPTER FEEDBOX CM6200
21	1	63018	SCREW M20 X 1.5 X 50MM SHCS
22	1	63121	ASSY ROTARY UNION CM6200
23	1	63156	AIR CONTROL ASSY FOR PNEUMATIC FEED 50 FT
24	2	63675	HOSE ASSY 451 1/2 X SAE-10M X 36 STRAIGHT FITTINGS CE
25	2	63682	FTG ADAPTER SAE-12M X SAE-10F
26	1	63774	ADAPTER SINGLE POINT DRIVE SHAFT
27	1	63782	KEY 8MM X 12MM X 40MM RADIUS BOTH ENDS WITH CB HOLE
28	1	63784	PLATE ADAPTER HYD MOTOR TO DRIVE ASSY
29	2	64901	FTG ELBOW 1/2 NPTM X 1/2 NPTF ST 45 DEG

ABBILDUNG A-30. TEILELISTE FÜR EINZELPUNKTMONTAGE (P/N 62037)

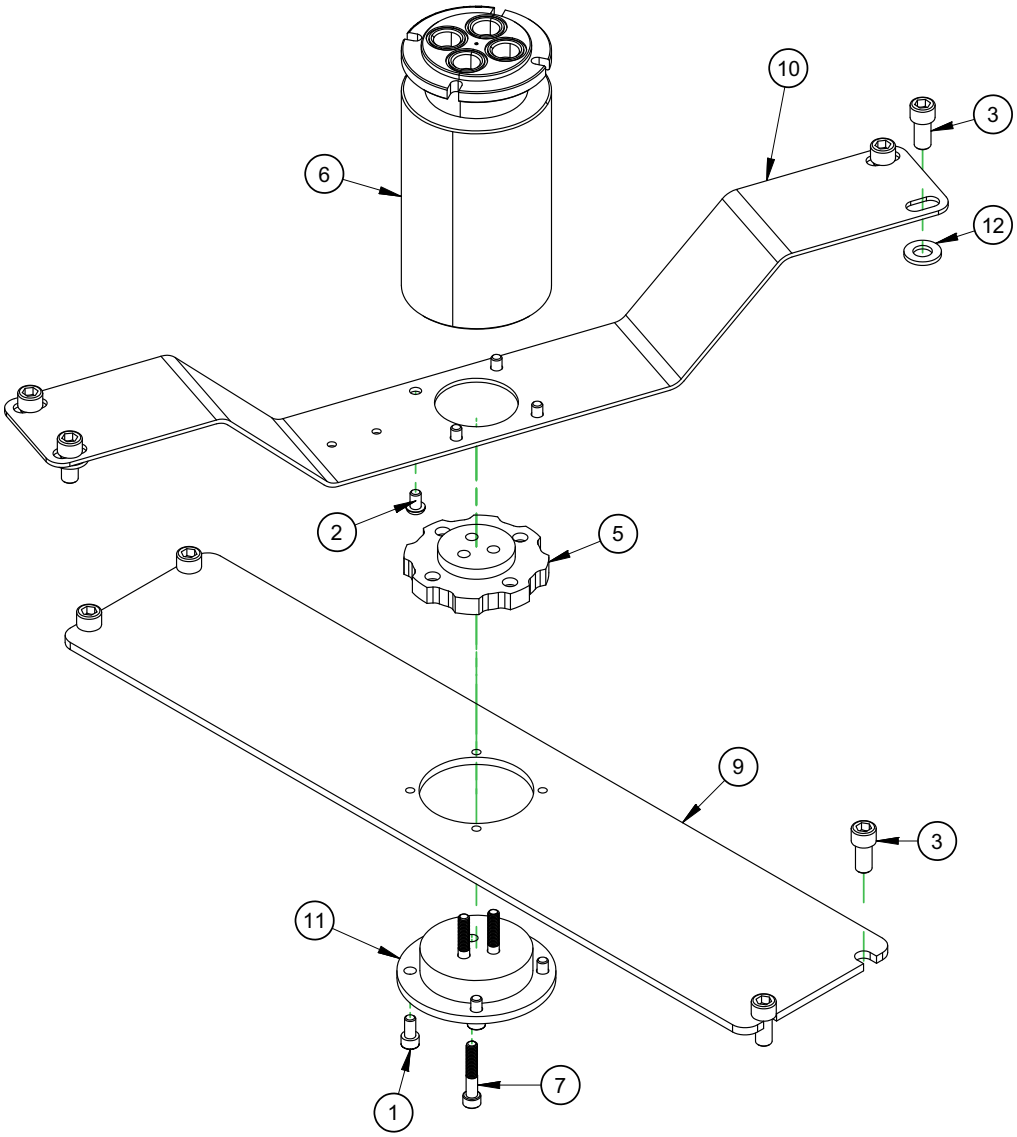

PARTS LIST			
ITEM	QTY	P/N:	DESCRIPTION
1	4	13787	SCREW M8 X 1.25 X 16mm
2	4	21769	5/16-18 X 1/2 BHSCS
3	8	42094	SCREW M12 X 1.75 X 25mm SHCS
4	3	42494	(NOT SHOWN FOR OD CONFIG ONLY) SCREW M8 X 1.25 X 25MM SHCS
5	1	58039	CAM FEED
6	1	58751	UNION ROTARY HYDRAULIC 4 CHANNEL 1/2 NPTF PORTS MOD
7	3	59349	SCREW M8 X 1.25 X 45MM SHCS
8	4	60837	(NOT SHOWN FOR OD CONFIG ONLY) SCREW M8 X 1.25 X 16MM HHCS
9	1	62891	MOUNT ROTARY UNION CM6200
10	1	62893	RESTRAINT TORQUE ROTARY UNION CM6200
11	1	62894	SPACER ROTARY UNION CM6200
12	4	62978	WASHER M12 FLTW 27MM OD 3.1 MM THICK

ABBILDUNG A-31. VERSAMMLUNG DER DREHGEWERKSCHAFT (P/N 63121)

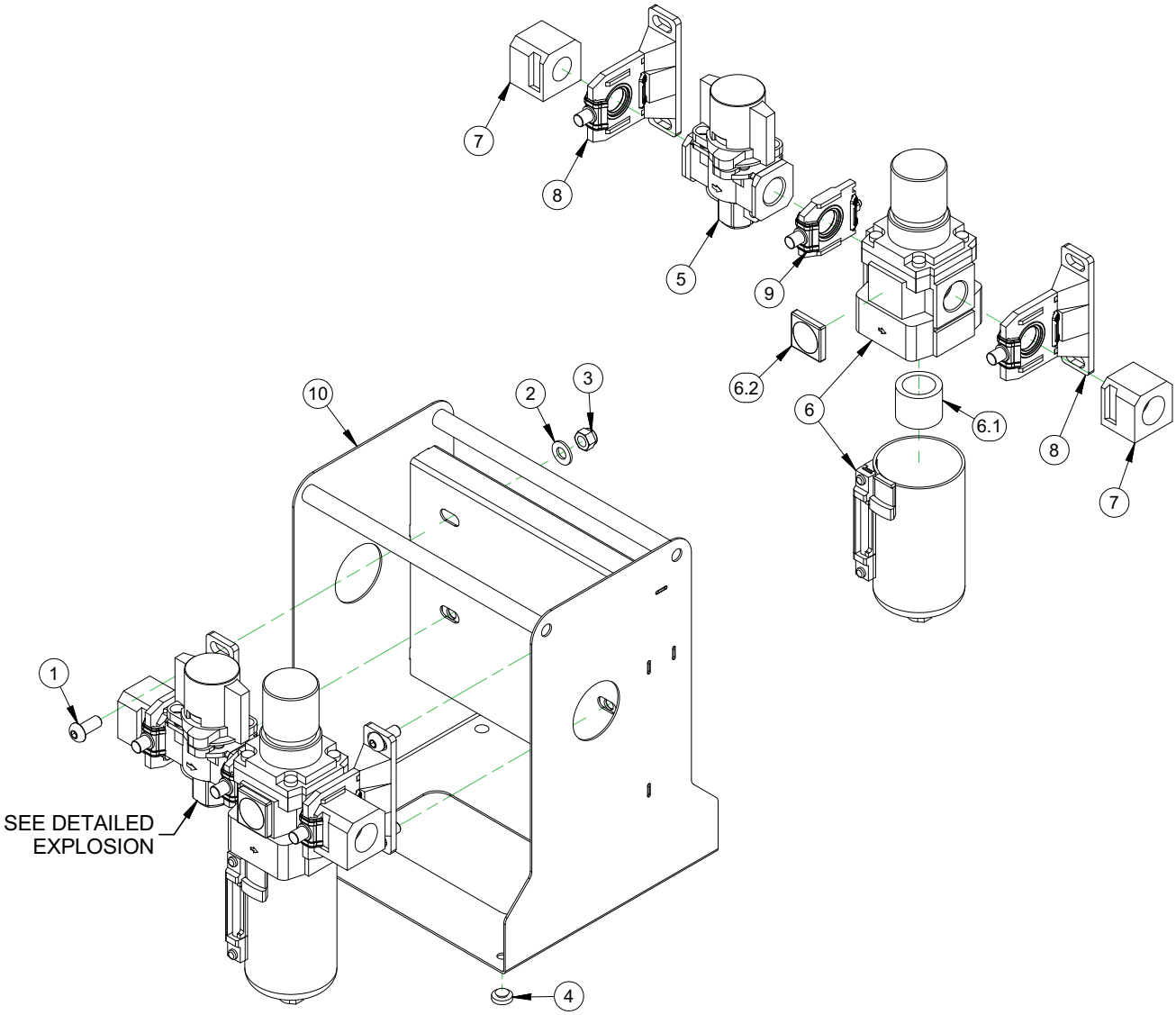

PARTS LIST					
ITEM	QTY	P/N:	DESCRIPTION	MANUFACTURER	MFG P/N
1	4	14771	5/16-18 X 3/4 BHSCS	N/A	N/A
2	4	13489	WASHER 5/16 FLTW SAE	N/A	N/A
3	4	19729	NUT 5/16-18 NYLON INSERT LOCKNUT	N/A	N/A
4	4	83462	RUBBER BUMPER, 9/16 DIA X 1/8 TALL	N/A	N/A
5	1	96732	SP VALVE ISOLATION/SHUTOFF WITH 1/2 INCH PORTS	SMC	VHS40-N04B-S-Z
6	1	96733	SP REGULATOR & FILTER W/ GAGE & SIGHT GLASS 7-125 PSI 1/2 PORTS	SMC	AW40-N04-8Z-B
6.1	1	96735	SP FILTER PNEUMATIC	SMC	AF40P-060S
6.2	1	97635	SP INDICATOR PRESSURE 1 MPA FOR SMC FRL	SMC	GC3-10AS-X2103
7	2	N/A	ADAPTER PIPE 1/2 INCH NPT FOR SMC SIZE 40 FRL	SMC	E400-N04-A
8	2	N/A	SPACER WITH BRACKET FOR SMC SIZE 40 FRL	SMC	Y400T-A
9	1	N/A	SPACER FOR SMC SIZE 40 FRL	SMC	Y400-A
10	1	97739	SHEET METAL FRAME FOR SMC PCU 1/2 INCH PORTS	N/A	N/A

ABBILDUNG A-32. MONTAGE DER PNEUMATISCHEN KONDITIONIERUNGSEINHEIT (P/N 97742)

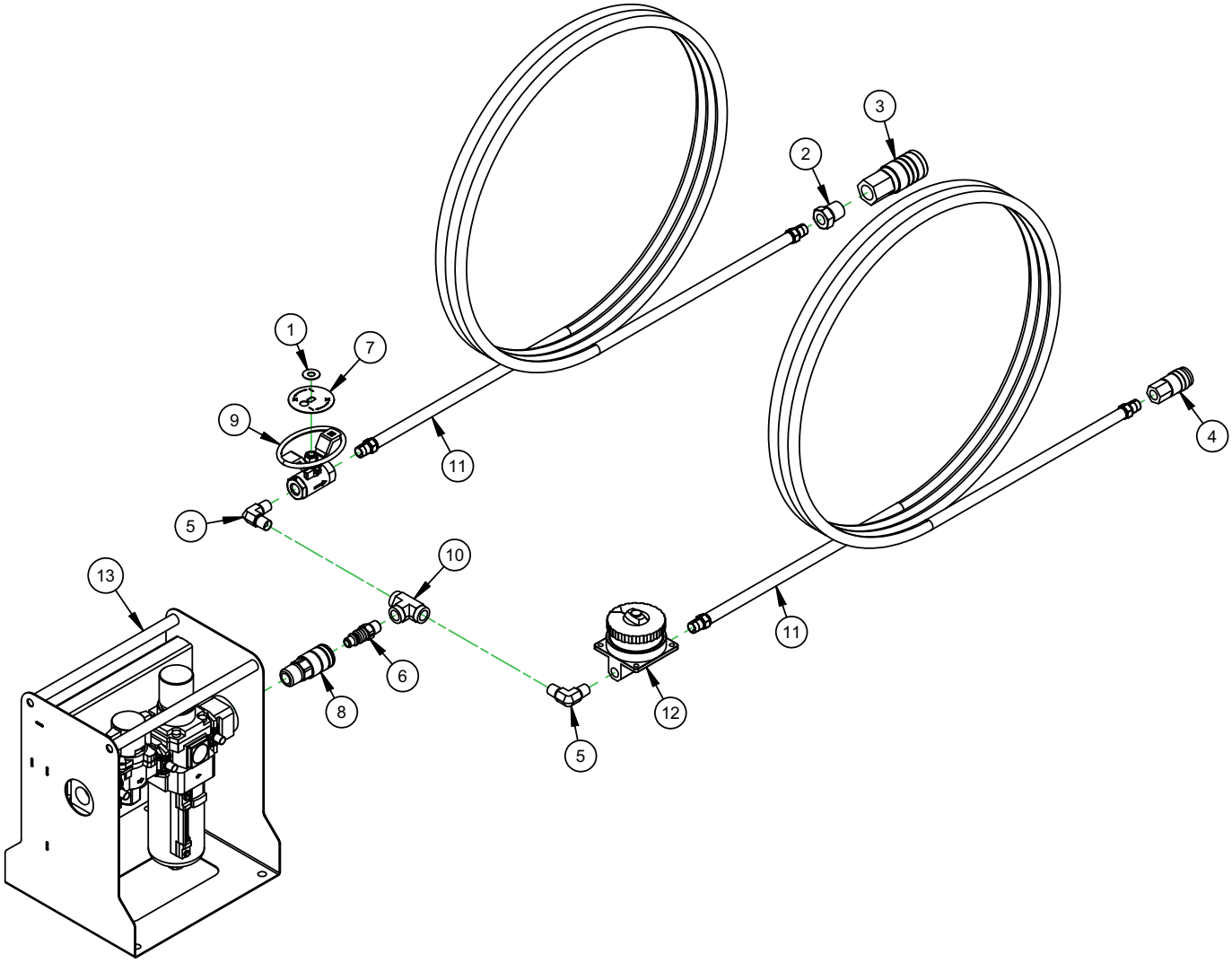

PARTS LIST			
ITEM	QTY	PART No.	DESCRIPTION
1	1	10770	WASHER THRUST .75 OD X .312 ID X .03
2	1	12920	FTG REDUCER BUSHING 1/2 NPTM X 1/4 NPTF STEEL
3	1	13208	FTG QUICK COUPLER 1/2B 1/2NPTF FEMALE AIR
4	1	28494	FTG QUICK COUPLER 1/4B 1/4 NPTF FEMALE AIR
5	2	30502	FTG ELBOW 1/4 NPTM X 1/4 NPTM 90 DEG
6	1	30936	FTG QUICK COUPLER 3/8B 1/4 NPTM MALE AIR
7	1	35772	LABEL DIRECTION OVAL HANDLE BALL VALVE
8	1	55126	FTG QUICK COUPLER 3/8B 1/2 NPTM FEMALE AIR
9	1	59203	VALVE BALL 1/4 NPTF X 1/4 NPTF VENTED OVAL HANDLE
10	1	59695	FTG TEE 1/4 NPTF (3)
11	2	63155	HOSE ASSY 801 1/4 X 1/4 NPTMS ENDS X 600
12	1	71317	REGULATOR PNUE. 2-40 PSI DIAL SET SEMI-PRECISION 1/4 NPTF X 1/4 NPTF
13	1	97742	ASSY PNEUMATIC FILTER & VALVE WITH STAND

ABBILDUNG A-33. DRUCKLUFTREGULIERUNG FÜR DIE PNEUMATIKANLAGE (P/N 63156)

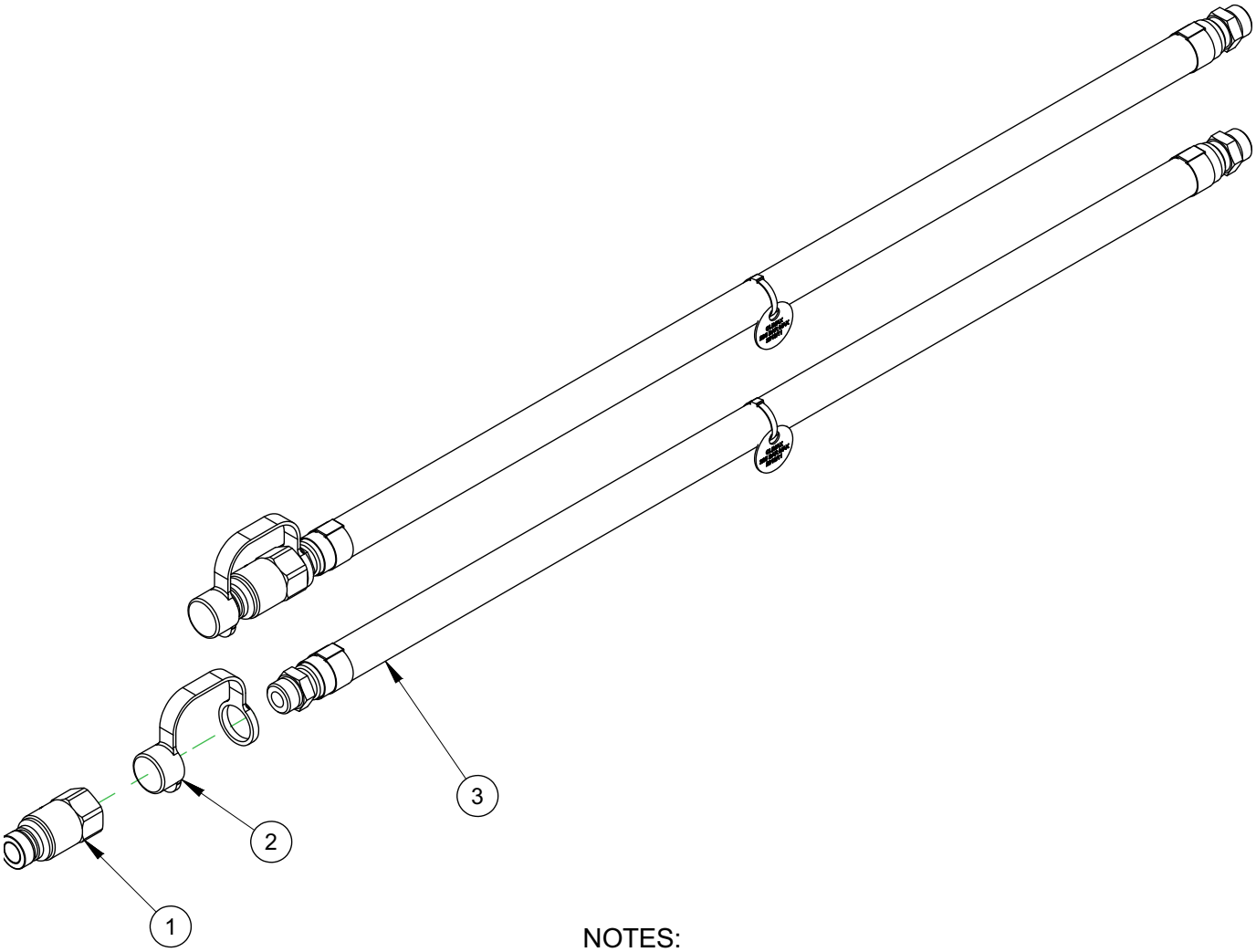

NOTES:

1. HOSES WILL ATTACH TO HYDRAULIC MOTOR.
2. QUICK COUPLERS AND DUST CAPS WILL ATTACH TO HOSES ON ROTARY UNION.

PARTS LIST			
ITEM	QTY	P/N:	DESCRIPTION
1	2	63427	FTG QD NIPPLE 1/2B ISO 16028 STYLE X SAE-10F
2	2	63428	DUST CAP QD NIPPLE 1/2B ISO 16028 STYLE RUBBER
3	2	83181	HOSE ASSY 451 1/2 X SAE-10M X 36 STRAIGHT FITTINGS CE

ABBILDUNG A-34. EINPUNKT-HYDRAULIKANTRIEBSEINHEIT (P/N 83186)

TABELLE A-1. ERSATZTEILE

Stk.	Teilenummer	Beschreibung
4	62606	HEBERING M24 X 3 X 38MM 70 ID X 130 AD 225 LÜA 4200 KG 9250 LBS SCHWENKBAR
64	58202	SHCS-SCHRAUBE 16MM DURCHM X 20MM X M12 X 175
Schlauchturm / Encoderschutz		
1	62616	SCHLAUCHTURM CM6200
2	57874	ZYLINDERSCHRAUBE M8 X 125 X 60MM
1	62615	SCHUTZ ENCODER CM6200
Spannvorrichtung Dreharm		
3	62601	SATZ SPANNVORRICHTUNG ARM CM6200
1	62602	SATZ SICHERHEITSSPANNVORRICHTUNG ARM
8	46222	ZYLINDERSCHRAUBE M16 X 20 X 45MM
Schleppbremsen		
16	27172	TELLERFEDER 5/8 X 1-1/4 X 040
4	11693	UNTERLEGSCHEIBE FLACH SAE 5/8
4	62612	GEWINDEBOLZEN M16 X 2 X 100MM VOLLGEWINDE
8	62613	KONTERMUTTER M16 X 20
2	46232	STANGENBREMSKLAMMER
2	54165	BACKENBREMSE 16M DREHTISCH
Fräse		
2	62255	GLEITSCHIENE STÄRKE SHS25 442MM LANG VORGESPANNTE METAL-LABSTREIFER 2 BLÖCKE
1	62426	KUGELGEWINDEMUTTER 20MM X 5MM FÜHRUNG 33 MM AD EICHEN-BERGER RUND
1	62431	KUGELSCHRAUBE FRÄSKOPF 275 BRG 8" HUB
1	62719	WERKZEUG 1" GEKEILTE WELLE F. MANUELLE BEDIENUNG
1	51859	DIGITALE WAAGE 8" SENKRECHTE MONTAGE
1	62645	SCHRAUBENSCHLÜSSEL 38MM 12 PT 1/2 ANTRIEB
1	53459	HYD MOTOR EINH 1311 CMM (80 CU IN) TYP 2000 MIT 12" SCHNELLKUPP STECKVERB
1	53458	HYD MOTOR EINH 1573 CMM (96 CU IN) TYP 2000 MIT 12" SCHNELLKUPP STECKVERB
1	46950	HYD MOTOR EINH 1950 CMM (119 CU IN) TYP 2000 MIT 12" SCHNELLK-UPP STECKVERB

TABELLE A-1. ERSATZTEILE

Stk.	Teilenummer	Beschreibung
1	46375	HYD MOTOR EINH 2442 CMM (149 CU IN) TYP 2000 MIT 12" SCHNELLK-UPP STECKVERB
1	46549	HYD MOTOR EINH 3064 CMM (187 CU IN) TYP 2000 MIT 12" SCHNELLK-UPP STECKVERB
1	46550	HYD MOTOR EINH 2294 CMM (140 CU IN) TYP 2000 MIT 12" SCHNELLK-UPP STECKVERB
1	47383	PLANFRÄSE 4 DURCHM SATZ #50 VERJ MIT EINSÄTZEN
1	47384	PLANFRÄSE 5 DURCHM SATZ #50 VERJ MIT EINSÄTZEN
1	47385	PLANFRÄSE 6 DURCHM SATZ #50 VERJ MIT EINSÄTZEN
1	47386	PLANFRÄSE 8 DURCHM SATZ #50 VERJ MIT EINSÄTZEN
1	56175	PLANFRÄSE 10 DURCHM SATZ #50 VERJ MIT EINSÄTZEN
1	47229	HARTMETALLEINSATZ QUADRATISCH 528 IC SEMT13T3AGSN-JM
Einpunkt		
3	12920	ANSCHLUSSSTK. REDUZIERSTK. BUCHSE 1/2 NPTM X 1/4 NPTF STAHL
2	27977	ANSCHLUSSSTK. STAUBSTOPFEN 1/2 SCHNELLKUPPL AUFNEHM
2	27978	ANSCHLUSSSTK. STAUBKAPPE 1/2 SCHNELLKUPPL STECKER
2	40614	ANSCHLUSSSTK. SCHNELLKUPPL STECKER TYP 60 1/2B X SAE-10F
2	40615	ANSCHLUSSSTK. SCHNELLKUPPL AUFNEHM TYP 60 1/2B X SAE-10F
2	46944	ANSCHLUSSSTK. ADAPTER 1/2 NPTF STECKER X SAE-10M
1	29066	DREHWERKZEUG HSS 3/4 X 50 L FEINBEARB EINZELSCHNITT
1	29067	DREHWERKZEUG HSS 3/4 X 50 R FEINBEARB EINZELSCHNITT
1	46252	SECHSKANT SCHRAUBENSCHLÜSSEL 17MM 1/2 ANTRIEB
1	57794	KNOPF SATZ MODIFIZIERT
2	59240	SCHLAUCH SATZ 451 1/2 X SAE-10 TO 1/2 NPTM X 12 GERADE ANSS-CHLUSSSTK.
1	60033	HALTERUNGSEINSATZ 3/4 SQ SCHAFT LINKS MIT 10 EINSÄTZEN SECO TRIGON
1	60034	HALTERUNGSEINSATZ 3/4 SQ SCHAFT RECHTS MIT 10 EINSÄTZEN SECO TRIGON
1	63121	SATZ DREHTISCH-ANSCHLUSSTÜCK CM6200
Einpunkt-Axialvorschubsystem		
1	58671	VORSCHUBKASTEN PNEUMATISCHE FERNVORSCHUBVERSTELLUNG
130	50985	DRUCKLUFTLEITUNG 1/4 AD X 040 WAND DOT 83 BAR (1200 PSI) NYLON BLAU

TABELLE A-1. ERSATZTEILE

Stk.	Teilenummer	Beschreibung
130	59151	DRUCKLUFTLEITUNG 1/8 AD X 023 WAND DOT 69 BAR (1000 PSI) NYLON BLAU
1	59318	VENTIL AUF/ZU 3-WEGE NORMAL-OFFEN
1	58519	WELLENZUFÜHRUNG ABNEHMBAR VORSCHUBWELLE
2	58446	LUFTZYLINDER 40MM DURCHM 10MM HUB EINFACHWIRKENDE FEDER LANG ZOLL
1	57530	NADELLAGER 1 ID X 1-5/16 AD X 625 OFFEN
2	25957	LAGER ROLLENKUPPLUNG 1 ID X 1312 AD X 625 (KB)
2	25959	DICHTUNG 1000 ID X 1312 AD X 125 (KB)
2	59156	ZYLINDERSCHRAUBE M6 X 10 X 60MM
Schleifen		
1	62633	SCHLEIFSCHEIBE 15 DURCHM CBN 130 GRIT 8MM BOHRUNG
1	62634	SCHLEIFSCHEIBE 225 DURCHM CBN 130 GRIT 8MM BOHRUNG
1	11132	ANSCHLUSSSTK. ELLBOGEN 3/8 NPTM X 3/8 NPTF GERADE 90°
1	13208	ANSCHLUSSSTK. SCHNELLKUPPL 1/2B X 1/2 INNENROHRGEWINDE DRUCKLUFT
1	14704	ANSCHLUSSSTK. NIPPEL 1/2 AUSSENROHRGEWINDE X 1/2 AUSSEN-ROHRGEWINDE
1	16615	ANSCHLUSSSTK. SCHNELLKUPPL 1/2B X 3/8 AUSSENROHRGEWINDE DRUCKLUFT
1	32196	SCHLAUCH SATZ 801 1/2 X 1/2 AUSSENROHRGEWINDE X 400
1	36328	KUGELVENTIL 1/2 INNENROHRGEWINDE X 1/2 INNENROHRGEWINDE OVALES HANDRAD
1	52734	ANSCHLUSSSTK. ADAPTER 3/8 G-GEWINDE STECKVERB X 3/8 INNENGEWINDE
1	57888	UNTERLEGSCHEIBENBEFESTIGUNG 21MM ID X 35MM AD X 3MM EIN-SATZGEHÄRTET
1	62624	WELLE SCHLEIFSCHEIBE CBN 10MM SCHAFT M8 GEWINDE
1	63018	ZYLINDERSCHRAUBE M20 X 15 X 50MM
Antrieb		
1	62702	GETRIEBERITZEL 4DP 18T CM6200
2	63008	KUGELLAGER 35433 ID X 45276 AD X 5118
1	63014	FEDERRING 3-1/2 AD X 109 STARK
2	63042	FEDERRING 4-1/2 AD X 109 STARK
Innenmontage-Spannfutter		

TABELLE A-1. ERSATZTEILE

Stk.	Teilenummer	Beschreibung
8	89718	FUTTER GRUNDPLATTE
4	91317	FUßGREIFER, NICHT-NIVELLIEREND, SATZ
8	89720	SPANNFUTTERFUSS 4,5 AD X 2,5 MIT GEWINDE
12	89721	SPANNFUTTERFUSS 4,5 AD X 5,0 MIT GEWINDE
8	89717	ENDKAPPE 4,50 DURCHM 4-4 AD 3 SPINDEL MIT GEWINDE 2-8 ID
4	57724	SCHWEISSABSTANDSHALTER 125 FF8200
8	57851	SCHWEISSABSTANDSHALTER 175 FF8200
4	57852	SCHWEISSABSTANDSHALTER 275 FF8200
96	58203	ZYLINDERSCHRAUBE M20 X 25 X 40MM
4	61362	HALTERUNG SICHERHEITSSCHWEISSPLATTE
Außenmontage-Spannfutter		
32	56192	ZYLINDERSCHRAUBE M20 X 25 X 70 MM
8	57724	SCHWEISSABSTANDSHALTER 125 FF8200
8	57851	SCHWEISSABSTANDSHALTER 175 FF8200
8	57852	SCHWEISSABSTANDSHALTER 275 FF8200
8	60755	ABSTANDSHALTER 5" AUSSENMONTAGE FF8200
96	58203	ZYLINDERSCHRAUBE M20 X 25 X 40MM
16	59827	ZYLINDERSCHRAUBE M8 X 125 X 16MM
8	60751	ZENTRIERPLATTE AUSSENMONTAGE FF8200
8	60752	UNTERLEGPLATTE AUSSENMONTAGE FF8200
8	60753	SCHWEISSBOLZEN ZUM NIEDERHALTEN, AUSSENMONTAGE FF8200
40	60756	GEWINDESTIFT MIT KEGELKUPPE M24 X 30 X 60MM
8	60757	GEFLANSCHTE MUTTER M24 X 30
32	60760	ZYLINDERSCHRAUBE M20 X 25 160MM
8	61433	SCHUTZSCHILD AUSSENMONTAGE FF8200
8	62687	STÜTZFUSS, SENKRECHT, AUSSENMONTAGE CM6200
Flanschmontagesatz		
32	12339	UNTERLEGSCHEIBE 3/4 FLACH
16	57348	GEWINDESTIFT MIT KEGELKUPPE M16 X 20 X 60MM
32	58203	ZYLINDERSCHRAUBE M20 X 25 XX 40MM
4	62887	KLEMME FLANSCHMONTAGESATZ CM6200
Servo / HPE		

TABELLE A-1. ERSATZTEILE

Stk.	Teilenummer	Beschreibung
1	55609	ANSCHLUSSKASTENEINHEIT UND SERVO-MOTOR ANSCHLUSSKABEL CM62000 15 KW
1	55608	KABELBAUM SATZ CM6000 15 KW 15 M (50 FT)
1	53433	KABELVERLÄNGERUNG 19 PIN 19 LEITER GEFORMTE STECKER 15 METER (50 FT) LANGE TPE-MANTEL
1	56204	HPE 25PS 415V TOUCHSCREEN SERVO MIT WINKELSTEUERUNG CE
400V-Version		
1	51558	SERVO-MOTOR 15 KW 2000 RPM 400 V MITSUBISHI
1	56000	SERVO VERSTÄRKER MRJ3 480V 2 KW MITSUBISHI
200 V-Version		
1	63761	SERVO-MOTOR MITSUBISHI 15KW 2000 U/MIN 200V MIT BREMSE
1	63762	SERVO VERSTÄRKER MRJ3 200V 2 KW MITSUBISHI

TABELLE A-2. WERKZEUGSATZ P/N 62029

P/N	BESCHREIBUNG	STK.
14735	STECKSCHLÜSSELVERLÄNG 1/2 ANTRIEB X 10	1
14818	STECKSCHLÜSSELRATSCHE 1/2 ANTRIEB	1
19700	TRANSPORTCONTAINER FLACHDACH 20 X 875 X 105	2
33999	SECHSKANT SCHRAUBENSCHLÜSSEL SATZ 050 - 3/8 BONDHUS KUGE-LENDE (KB)	1
35516	RÜCKSCHLAGFREIER HAMMER 1-3/4 DURCHM KOPF (KB)	1
38678	SECHSKANT SCHRAUBENSCHLÜSSEL SATZ 15 - 10MM BONDHUS KUGE-LENDE (KB)	1
46249	SECHSKANT BIT-STECKSCHLÜSSEL 14MM X 1/2	1
46250	SECHSKANT BIT-STECKSCHLÜSSEL 10MM X 1/2	1
46252	SECHSKANT BIT-STECKSCHLÜSSEL 17MM X 1/2	1
46253	SECHSKANT BIT-STECKSCHLÜSSEL 12MM X 1/2	1
53197	KOMBI-SCHRAUBENSCHLÜSSEL 24 MM 12PT 338MM LANG SATIN-FINISH	1
58350	SCHRAUBENSCHLÜSSEL 46mm X 8-9/16 LANG FÜR ENGE BOHRUNGEN	2
58368	ELEKTRONISCHE ANZEIGE 500 HUB 2-1/4 DURCHM 0005"	1
58375	SECHSKANT BIT-STECKSCHLÜSSEL 19MM X 1/2	1
63469	MODIFIZIERTES HANDRAD 5 DURCHM 1/2" SECHSKANT	1

TABELLE A-2. WERKZEUGSATZ P/N 62029

64370	ANZEIGERHALTER, GELENKARM, MIT MAGNETFUSS 282MM REICHWEITE NOGA	1
65183	SCHMIERMITTEL GEGEN FESTFRESSEN, MOLYBDÄN-GRAFIT, HOHER DRUCK 280 GRAMM (10 OZ) DOSE	1
65188	SCHRAUBENSCHLÜSSEL SPANNER 110MM BIS 115MM (4-1/2) DURCHM 300 DURCHM PIN	2
69465	KOMBI-SCHRAUBENSCHLÜSSEL ENDE 46MM LANG	1
76807	GABEL-SCHRAUBENSCHLÜSSEL 3-1/8” EINFACH	1

Diese Seite bleibt absichtlich unbeschriftet

ANHANG B SCHEMATISCHE DARSTELLUNGEN

Schaltplanliste

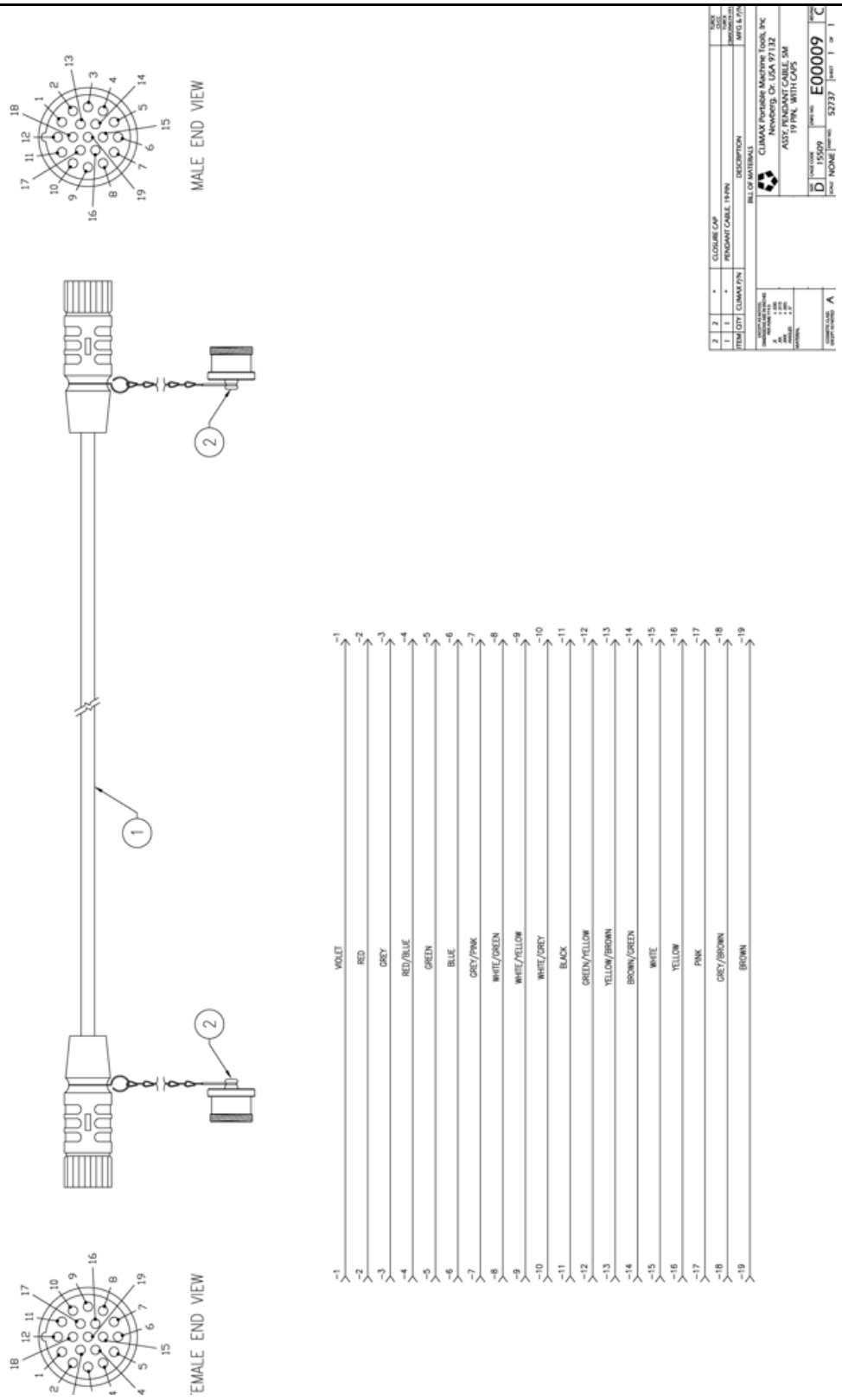

ABBILDUNG B-1. MR-J3 UND MR-J4 BEDIENELEMENT KABELPLAN (P/N E00009)

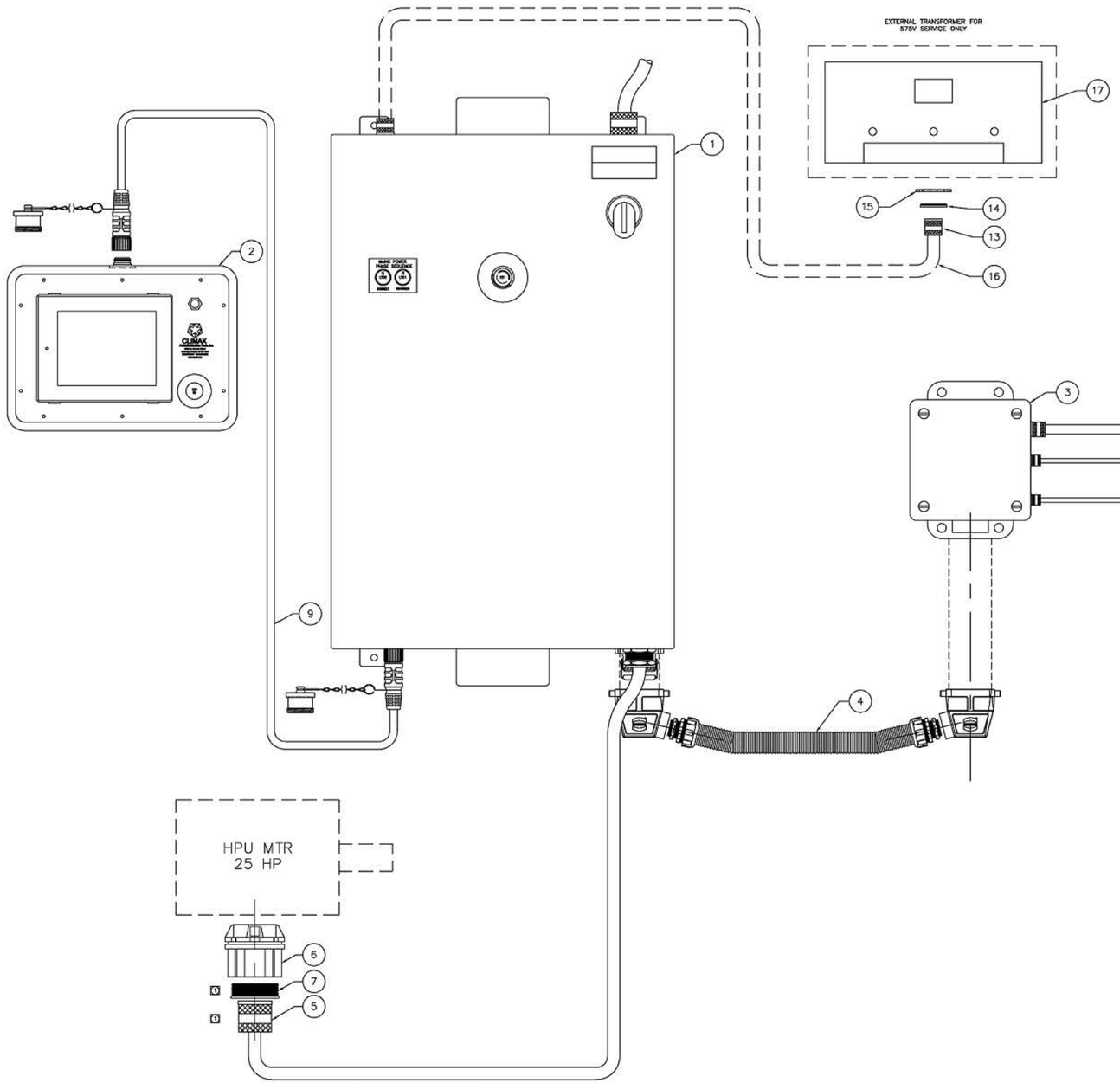

CLIMAX CM6200 PART NUMBERS

DESCRIPTION	UPPER LEVEL ASSEMBLY w/ AIR	UPPER LEVEL ASSEMBLY w/o AIR	VOLTAGE	BASE UNIT (HPU) w/ AIR	BASE UNIT (HPU) w/o AIR	CONTROLS	PENDANT
25 HP CM6200 SERVO WITH AIR	63135	63186	230	62749	64089	62258	64096
	63138	63190	460			62375	
	63137	63189	200–208	62750	64090	63062	
	63136	63187	380–415			62337	
	63139	63191	575	62751	64091	62422	

NOTE: ITEMS 13 THRU 17 ARE FOR 575VAC VERSION OF PANEL ONLY.

NOTE: FOR DUPLICATE ITEM NUMBERS, SELECT ITEM BY INPUT VOLTAGE OF PANEL. SEE SCHEMATIC C00088 FOR REFERENCE.

ITEM	QTY	DESCRIPTION	MFG	P/N
17	1	360KVA, 600 - 480VAC STEP DOWN TRANSFORMER	ACME	T-2A-79516-15
16	10	FT, CABLE AT TRANSFORMER, 16/7 (7/16'd)	ANIXTER	4A-1607
15	1	LOCKNUT, 1/2"	APPLETON	BL50
14	1	METAL CLAD O-RING, 1/2"	APPLETON	STG-50
13	1	CORD GRIP AT TRANSFORMER, ".375 - .500"	APPLETON	CG-3750S
12	1	CLIMAX SHIPPING LABEL	*	*
11	1	PROGRAMMING, PLC	AUTOMATION SOLUTIONS	Z00038
10	1	PROGRAMMING, PENDANT HMI	AUTOMATION SOLUTIONS	Z00039
9	1	CORDSET, 19 PIN, SHIELDED, WITH CAPS	AUTOMATION SOLUTIONS	E00009
8	1	SERVO MOTOR, 1.5KW, 460VAC, FOR 380 - 575VAC	MITSUBISHI	HF-SP1524BK
8	1	SERVO MOTOR, 1.5KW, 230VAC, FOR 200 - 230VAC	MITSUBISHI	HF-SP152BK
7	1	REDUCING BUSHING, 2" - 1.25" FOR 315 - 575VAC	APPLETON	RB200-125
7	1	REDUCING BUSHING, 2" - 1.5", FOR 200 - 230VAC	APPLETON	RB200-150
6	1	ZINC HUB CONNECTOR, 2"	APPLETON	HUB-200D
5	1	CORD GRIP, 1 1/4" NPT, 1.00" - 1.125", FOR 315 - 575VAC	APPLETON	CG-1001255
5	1	CORD GRIP, 1 1/2" NPT, 1.281" - 1.531", FOR 200 - 230VAC	APPLETON	CG-1281505
4	1	MILL TETHER	AUTOMATION SOLUTIONS	B00070
3	1	MILL JUNCTION BOX	AUTOMATION SOLUTIONS	B00083
2	1	12" TOUCH SCREEN PENDANT	AUTOMATION SOLUTIONS	B00110
1	1	CONTROL ENCLOSURE, SERVO ROTARY MILL w/HPU	AUTOMATION SOLUTIONS	B00116

BILL OF MATERIALS

EXCEPT AS NOTED, DIMENSIONS ARE IN INCHES PER ASME Y14.5
.X ± .030
.XX ± .010
.XXX ± .005
ANGLES ± .5°
MATERIAL

CLIMAX Portable Machine Tools, Inc
Newberg, Or. USA 97132

CM6200 CONTROLS
SYSTEM LAYOUT

SIZE D | CAGE CODE 15509 | DWG NO. A00033 | REVISION B

ABBILDUNG B-2.MR-J3 SYSTEM-LAYOUT (P/N A00033)

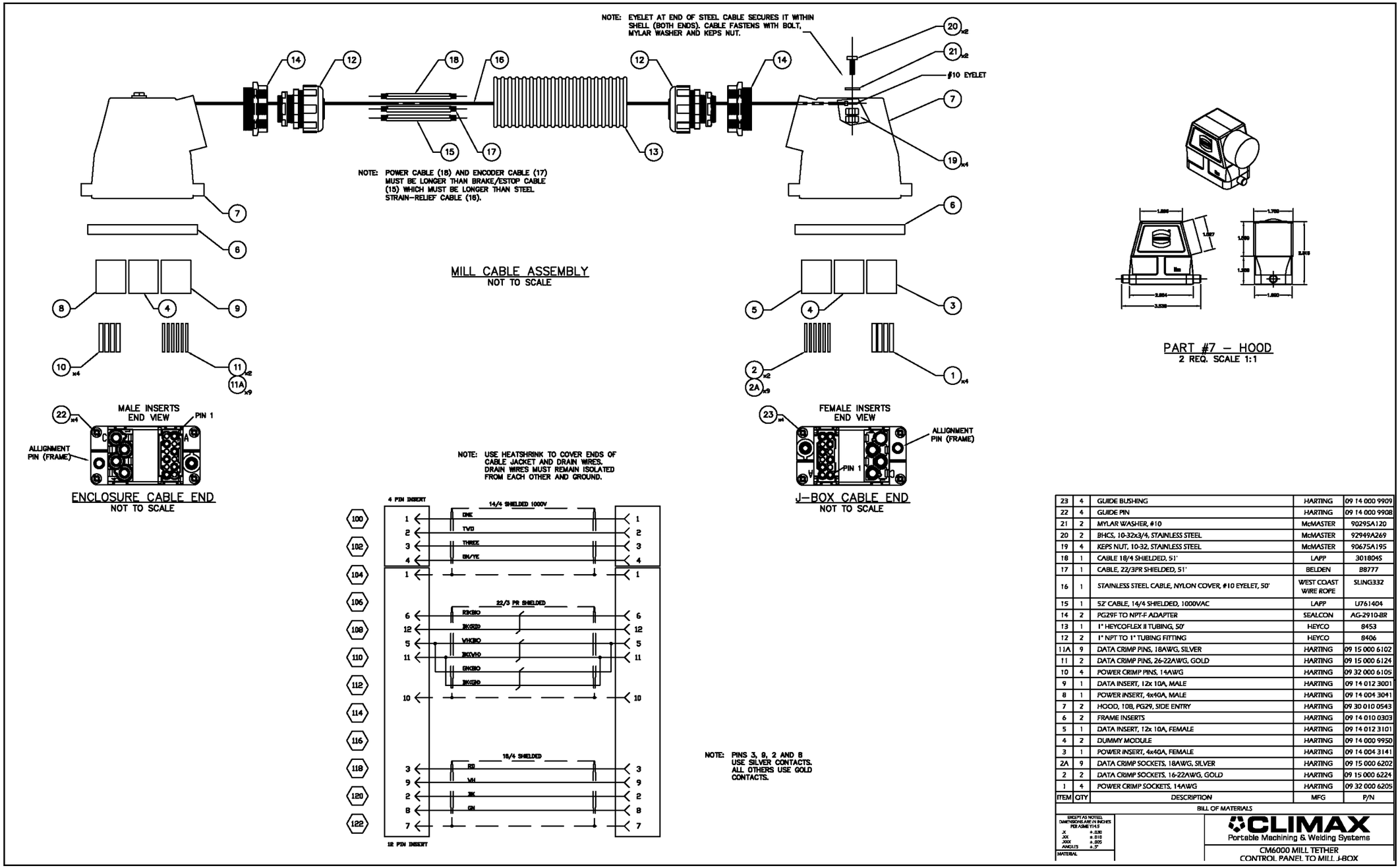

ITEM	QTY	DESCRIPTION	MFG	P/N
23	4	GUIDE BUSHING	HARTING	09 14 000 9909
22	4	GUIDE PIN	HARTING	09 14 000 9908
21	2	MYLAR WASHER, #10	McMASTER	90295A120
20	2	BHCS, 10-32x3/4, STAINLESS STEEL	McMASTER	92949A269
19	4	KEPS NUT, 10-32, STAINLESS STEEL	McMASTER	90675A195
18	1	CABLE 18/4 SHIELDED, 51'	LAPP	3018045
17	1	CABLE, 22/3PR SHIELDED, 51'	BELDEN	88777
16	1	STAINLESS STEEL CABLE, NYLON COVER, #10 EYELET, 50'	WEST COAST WIRE ROPE	SLING332
15	1	52' CABLE, 14/4 SHIELDED, 1000VAC	LAPP	U761404
14	2	PG29F TO NPT-F ADAPTER	SEALCON	AG-2910-BR
13	1	1" HEYCOFLEX II TUBING, 50'	HEYCO	8453
12	2	1" NPT TO 1" TUBING FITTING	HEYCO	8406
11A	9	DATA CRIMP PINS, 18AWG, SILVER	HARTING	09 15 000 6102
11	2	DATA CRIMP PINS, 26-22AWG, GOLD	HARTING	09 15 000 6124
10	4	POWER CRIMP PINS, 14AWG	HARTING	09 32 000 6105
9	1	DATA INSERT, 12x 10A, MALE	HARTING	09 14 012 3001
8	1	POWER INSERT, 4x40A, MALE	HARTING	09 14 004 3041
7	2	HOOD, 10B, PG29, SIDE ENTRY	HARTING	09 30 010 0543
6	2	FRAME INSERTS	HARTING	09 14 010 0303
5	1	DATA INSERT, 12x 10A, FEMALE	HARTING	09 14 012 3101
4	2	DUMMY MODULE	HARTING	09 14 000 9950
3	1	POWER INSERT, 4x40A, FEMALE	HARTING	09 14 004 3141
2A	9	DATA CRIMP SOCKETS, 18AWG, SILVER	HARTING	09 15 000 6202
2	2	DATA CRIMP SOCKETS, 16-22AWG, GOLD	HARTING	09 15 000 6224
1	4	POWER CRIMP SOCKETS, 14AWG	HARTING	09 32 000 6205

EXCEPT AS NOTED, DIMENSIONS ARE IN INCHES PER ASME Y14.5
X ±.030
XX ±.010
XXX ±.005
ANGLES ±.5°
MATERIAL

ABBILDUNG B-3. MR-J3 UND MR-J4 FRÄSER, SCHALTPLAN (P/N B00070)

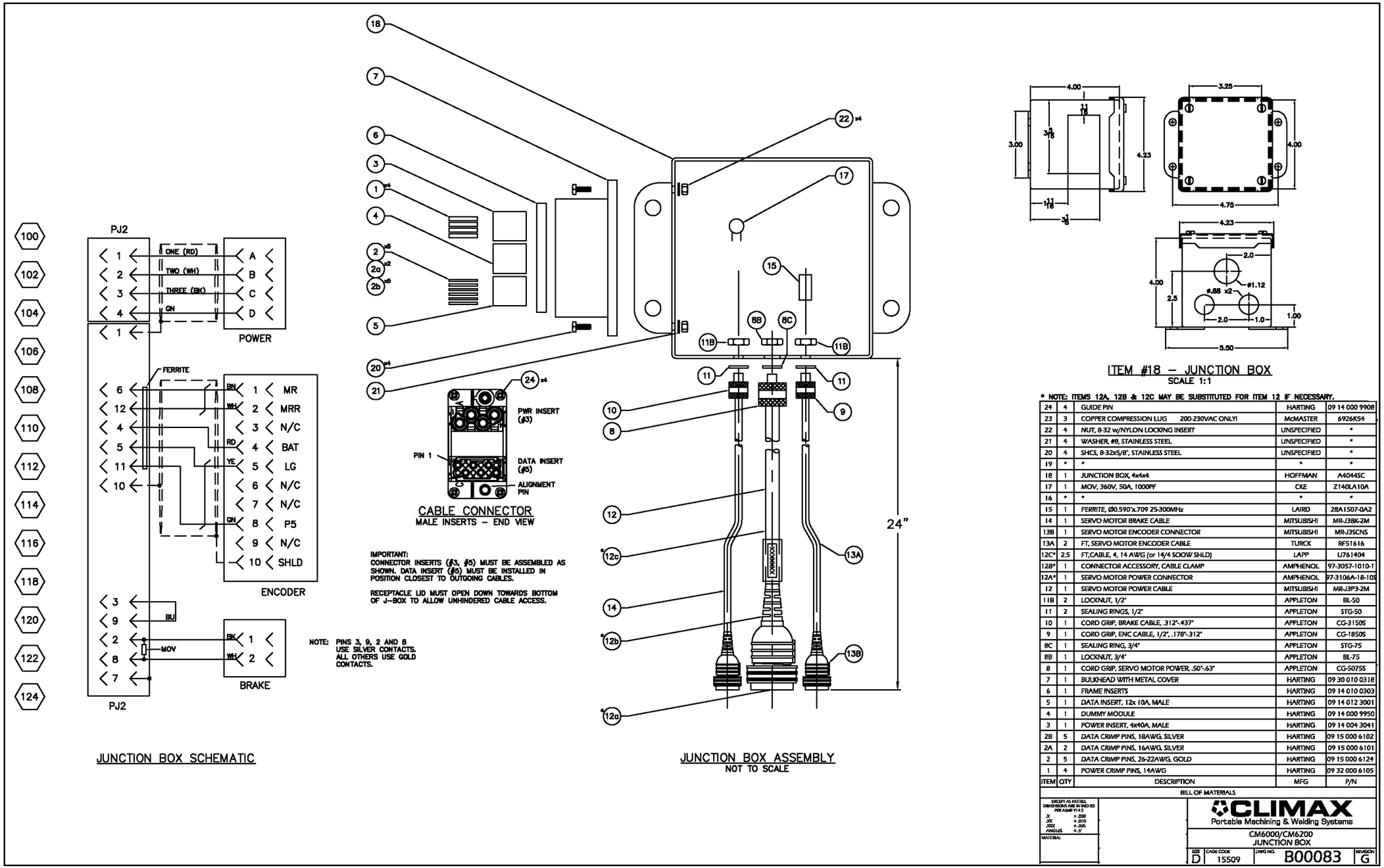

ABBILDUNG B-4. MR-J3 UND MR-J4 ANSCHLUSSKASTENEINHEIT (P/N B00083)

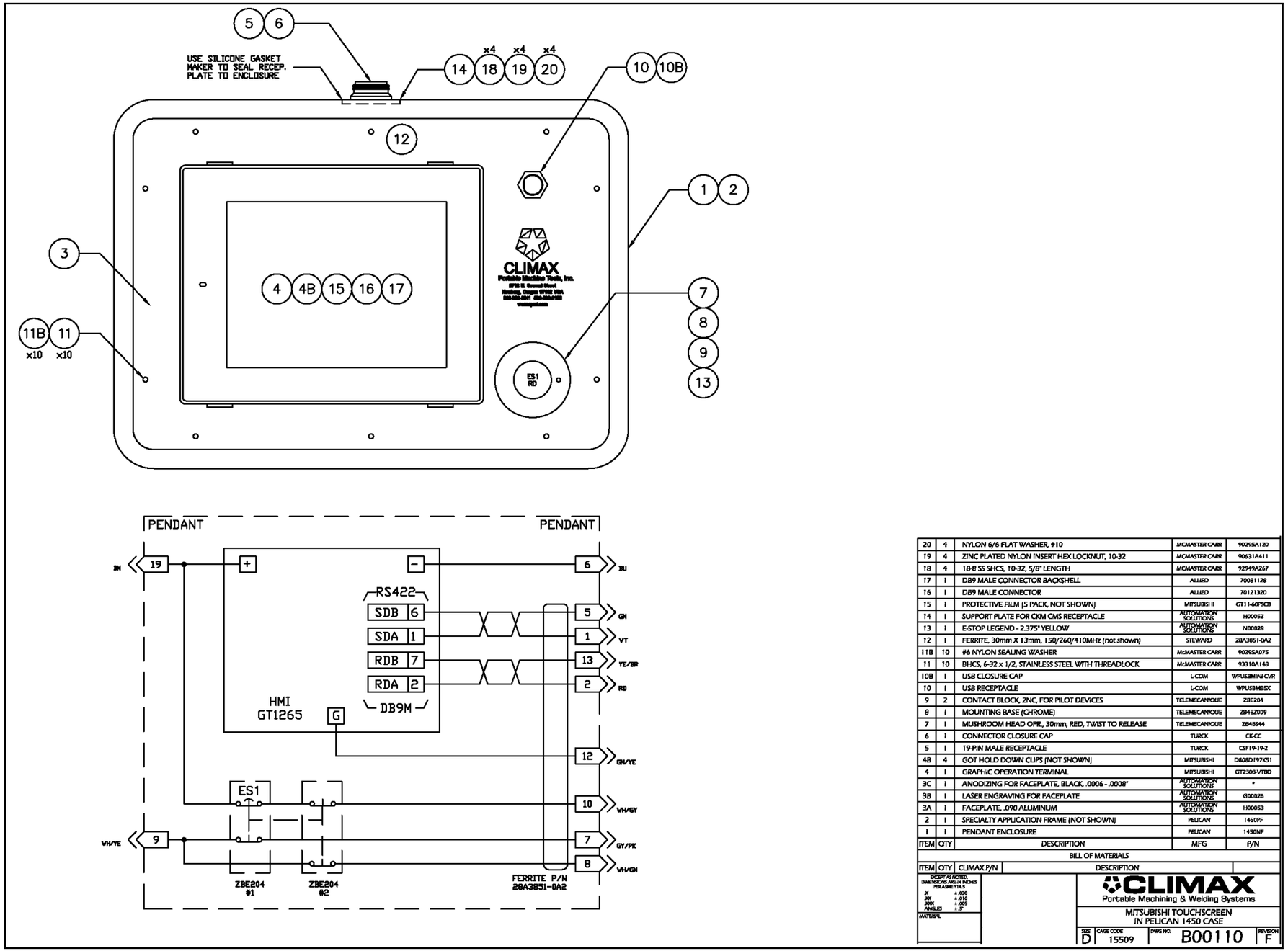

ITEM	QTY	DESCRIPTION	MFG	P/N
20	4	NYLON 6/6 FLAT WASHER, #10	MCMASTER CARR	90295A120
19	4	ZINC PLATED NYLON INSERT HEX LOCKNUT, 10-32	MCMASTER CARR	90631A411
18	4	18-8 SS SHCS, 10-32, 5/8" LENGTH	MCMASTER CARR	92949A267
17	1	DB9 MALE CONNECTOR BACKSHELL	ALLIED	70081128
16	1	DB9 MALE CONNECTOR	ALLIED	70121320
15	1	PROTECTIVE FILM (5 PACK, NOT SHOWN)	MITSUBISHI	GT11-60PSCB
14	1	SUPPORT PLATE FOR CKM CMS RECEPTACLE	AUTOMATION SOLUTIONS	H00052
13	1	E-STOP LEGEND - 2.375" YELLOW	AUTOMATION SOLUTIONS	N00028
12	1	FERRITE, 30mm X 13mm, 150/260/410MHz (not shown)	STEWARD	28A3851-0A2
11B	10	#6 NYLON SEALING WASHER	McMASTER CARR	90295A075
11	10	BHCS, 6-32 x 1/2, STAINLESS STEEL WITH THREADLOCK	McMASTER CARR	93310A148
10B	1	USB CLOSURE CAP	L-COM	WPUSBMINI-CVR
10	1	USB RECEPTACLE	L-COM	WPUSBMBSX
9	2	CONTACT BLOCK, ZNC, FOR PILOT DEVICES	TELEMECANIQUE	ZBE204
8	1	MOUNTING BASE (CHROME)	TELEMECANIQUE	ZB4BZ009
7	1	MUSHROOM HEAD OPR., 30mm, RED, TWIST TO RELEASE	TELEMECANIQUE	ZB4BS44
6	1	CONNECTOR CLOSURE CAP	TUROX	CX-CC
5	1	19-PIN MALE RECEPTACLE	TUROX	CSF19-19-2
4B	4	GOT HOLD DOWN CLIPS (NOT SHOWN)	MITSUBISHI	D608D197K51
4	1	GRAPHIC OPERATION TERMINAL	MITSUBISHI	GT2308-VTBD
3C	1	ANODIZING FOR FACEPLATE, BLACK, .0006 - .0008"	AUTOMATION SOLUTIONS	*
3B	1	LASER ENGRAVING FOR FACEPLATE	AUTOMATION SOLUTIONS	G00026
3A	1	FACEPLATE, .090 ALUMINUM	AUTOMATION SOLUTIONS	H00053
2	1	SPECIALTY APPLICATION FRAME (NOT SHOWN)	PELICAN	1450FF
1	1	PENDANT ENCLOSURE	PELICAN	1450NF

ABBILDUNG B-5. MR-J3 UND MR-J4 BEDIENELEMENT EINHEIT (P/N B00110)

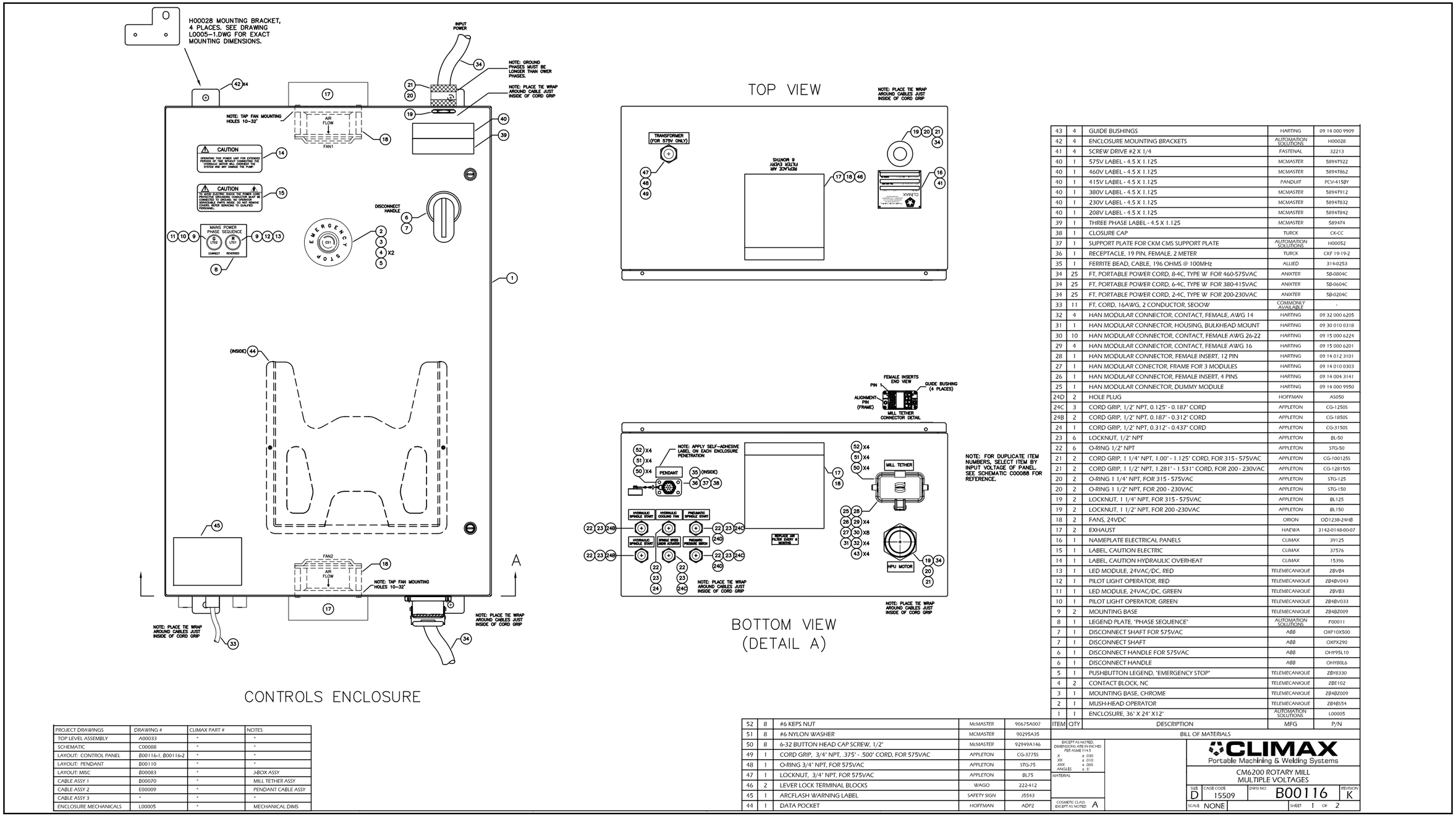

ITEM	QTY	DESCRIPTION	MFG	P/N
		BILL OF MATERIALS		
43	4	GUIDE BUSHINGS	HARTING	09 14 000 9909
42	4	ENCLOSURE MOUNTING BRACKETS	AUTOMATION SOLUTIONS	H00028
41	4	SCREW DRIVE #2 X 1/4	FASTENAL	32213
40	1	575V LABEL - 4.5 X 1.125	MCMASTER	5894T922
40	1	460V LABEL - 4.5 X 1.125	MCMASTER	5894T862
40	1	415V LABEL - 4.5 X 1.125	PANDUIT	PCV-415BY
40	1	380V LABEL - 4.5 X 1.125	MCMASTER	5894T912
40	1	230V LABEL - 4.5 X 1.125	MCMASTER	5894T832
40	1	208V LABEL - 4.5 X 1.125	MCMASTER	5894T842
39	1	THREE PHASE LABEL - 4.5 X 1.125	MCMASTER	5894T4
38	1	CLOSURE CAP	TURCK	CK-CC
37	1	SUPPORT PLATE FOR CKM CMS SUPPORT PLATE	AUTOMATION SOLUTIONS	H00052
36	1	RECEPTACLE, 19 PIN, FEMALE, 2 METER	TURCK	CKF 19-19-2
35	1	FERRITE BEAD, CABLE, 196 OHMS @ 100MHz	ALLIED	314-0253
34	25	FT, PORTABLE POWER CORD, 8-4C, TYPE W FOR 460-575VAC	ANIXTER	5B-0804C
34	25	FT, PORTABLE POWER CORD, 6-4C, TYPE W FOR 380-415VAC	ANIXTER	5B-0604C
34	25	FT, PORTABLE POWER CORD, 2-4C, TYPE W FOR 200-230VAC	ANIXTER	5B-0204C
33	11	FT, CORD, 16AWG, 2 CONDUCTOR, SEOOW	COMMONLY AVAILABLE	-
32	4	HAN MODULAR CONNECTOR, CONTACT, FEMALE, AWG 14	HARTING	09 32 000 6205
31	1	HAN MODULAR CONNECTOR, HOUSING, BULKHEAD MOUNT	HARTING	09 30 010 0318
30	10	HAN MODULAR CONNECTOR, CONTACT, FEMALE AWG 26-22	HARTING	09 15 000 6224
29	4	HAN MODULAR CONNECTOR, CONTACT, FEMALE AWG 16	HARTING	09 15 000 6201
28	1	HAN MODULAR CONNECTOR, FEMALE INSERT, 12 PIN	HARTING	09 14 012 3101
27	1	HAN MODULAR CONECTOR, FRAME FOR 3 MODULES	HARTING	09 14 010 0303
26	1	HAN MODULAR CONNECTOR, FEMALE INSERT, 4 PINS	HARTING	09 14 004 3141
25	1	HAN MODULAR CONNECTOR, DUMMY MODULE	HARTING	09 14 000 9950
24D	2	HOLE PLUG	HOFFMAN	A5050
24C	3	CORD GRIP, 1/2" NPT, 0.125" - 0.187" CORD	APPLETON	CG-12505
24B	2	CORD GRIP, 1/2" NPT, 0.187" - 0.312" CORD	APPLETON	CG-18505
24	1	CORD GRIP, 1/2" NPT, 0.312" - 0.437" CORD	APPLETON	CG-31505
23	6	LOCKNUT, 1/2" NPT	APPLETON	BL-50
22	6	O-RING 1/2" NPT	APPLETON	STG-50
21	2	CORD GRIP, 1 1/4" NPT, 1.00" - 1.125" CORD, FOR 315 - 575VAC	APPLETON	CG-10012555
21	2	CORD GRIP, 1 1/2" NPT, 1.281" - 1.531" CORD, FOR 200 - 230VAC	APPLETON	CG-12815005
20	2	O-RING 1 1/4" NPT, FOR 315 - 575VAC	APPLETON	STG-125
20	2	O-RING 1 1/2" NPT, FOR 200 - 230VAC	APPLETON	STG-150
19	2	LOCKNUT, 1 1/4" NPT, FOR 315 - 575VAC	APPLETON	BL125
19	2	LOCKNUT, 1 1/2" NPT, FOR 200 -230VAC	APPLETON	BL150
18	2	FANS, 24VDC	ORION	OD1238-24HB
17	2	EXHAUST	HAEWA	3142-0148-00-07
16	1	NAMEPLATE ELECTRICAL PANELS	CLIMAX	39125
15	1	LABEL, CAUTION ELECTRIC	CLIMAX	37576
14	1	LABEL, CAUTION HYDRAULIC OVERHEAT	CLIMAX	15396
13	1	LED MODULE, 24VAC/DC, RED	TELEMECANIQUE	ZBVB4
12	1	PILOT LIGHT OPERATOR, RED	TELEMECANIQUE	ZB4BV043
11	1	LED MODULE, 24VAC/DC, GREEN	TELEMECANIQUE	ZBVB3
10	1	PILOT LIGHT OPERATOR, GREEN	TELEMECANIQUE	ZB4BV033
9	2	MOUNTING BASE	TELEMECANIQUE	ZB4BZ009
8	1	LEGEND PLATE, "PHASE SEQUENCE"	AUTOMATION SOLUTIONS	F00011
7	1	DISCONNECT SHAFT FOR 575VAC	ABB	OXP10X500
7	1	DISCONNECT SHAFT	ABB	OXPX290
6	1	DISCONNECT HANDLE FOR 575VAC	ABB	OHY95L10
6	1	DISCONNECT HANDLE	ABB	OHY80L6
5	1	PUSHBUTTON LEGEND, "EMERGENCY STOP"	TELEMECANIQUE	ZBY8330
4	2	CONTACT BLOCK, NC	TELEMECANIQUE	ZBE102
3	1	MOUNTING BASE, CHROME	TELEMECANIQUE	ZB4BZ009
2	1	MUSH-HEAD OPERATOR	TELEMECANIQUE	ZB4B554
1	1	ENCLOSURE, 36" X 24" X12"	AUTOMATION SOLUTIONS	L00005
52	8	#6 KEPS NUT	McMASTER	90675A007
51	8	#6 NYLON WASHER	MCMASTER	90295A35
50	8	6-32 BUTTON HEAD CAP SCREW, 1/2"	McMASTER	92949A146
49	1	CORD GRIP, 3/4" NPT, .375" - .500" CORD, FOR 575VAC	APPLETON	CG-37755
48	1	O-RING 3/4" NPT, FOR 575VAC	APPLETON	STG-75
47	1	LOCKNUT, 3/4" NPT, FOR 575VAC	APPLETON	BL75
46	2	LEVER LOCK TERMINAL BLOCKS	WAGO	222-412
45	1	ARCFLASH WARNING LABEL	SAFETY SIGN	J5543
44	1	DATA POCKET	HOFFMAN	ADP2

PROJECT DRAWINGS	DRAWING #	CLIMAX PART #	NOTES
TOP LEVEL ASSEMBLY	A00033	"	"
SCHEMATIC	C00088	"	"
LAYOUT: CONTROL PANEL	B00116-1, B00116-2	"	"
LAYOUT: PENDANT	B00110	"	"
LAYOUT: MISC	B00083	"	J-BOX ASSY
CABLE ASSY 1	B00070	"	MILL TETHER ASSY
CABLE ASSY 2	E00009	"	PENDANT CABLE ASSY
CABLE ASSY 3	-	"	-
ENCLOSURE MECHANICALS	L00005	"	MECHANICAL DIMS

EXCEPT AS NOTED DIMENSIONS ARE IN INCHES PER ASME Y14.5
X ± .030
.XX ± .010
.XXX ± .005
ANGLES ± 5°
MATERIAL
COSMETIC CLASS EXCEPT AS NOTED A

CLIMAX
Portable Machining & Welding Systems

CM6200 ROTARY MILL
MULTIPLE VOLTAGES

SIZE D | CAGE CODE 15509 | DWG NO. B00116 | REVISION K
SCALE NONE | SHEET 1 OF 2

ABBILDUNG B-6. MR-J3 BEDIENFELD AUßENMONTAGEBLECH 1 (P/N B00116)

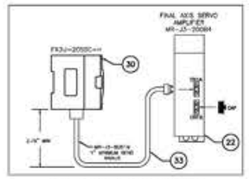

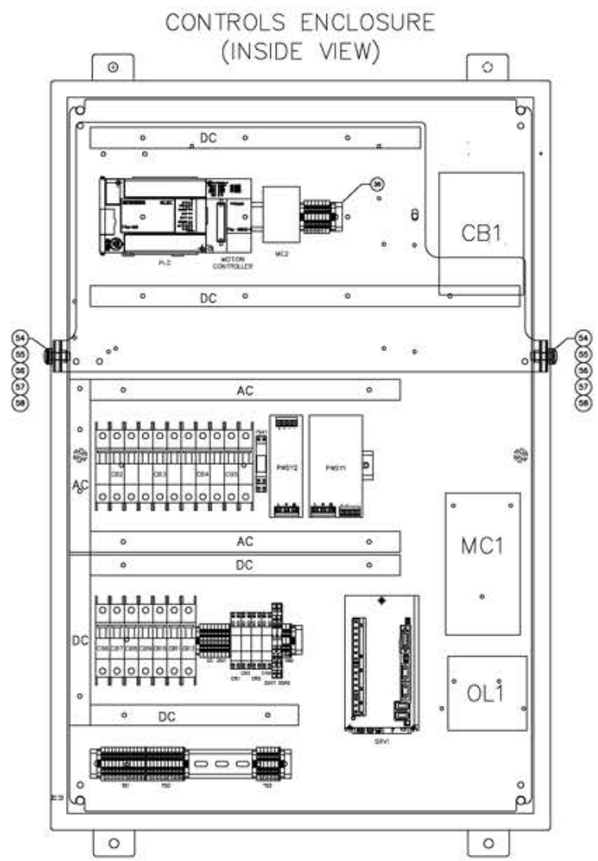

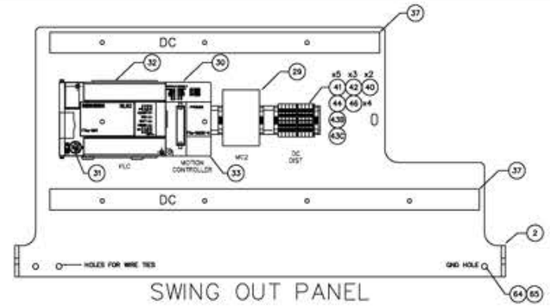

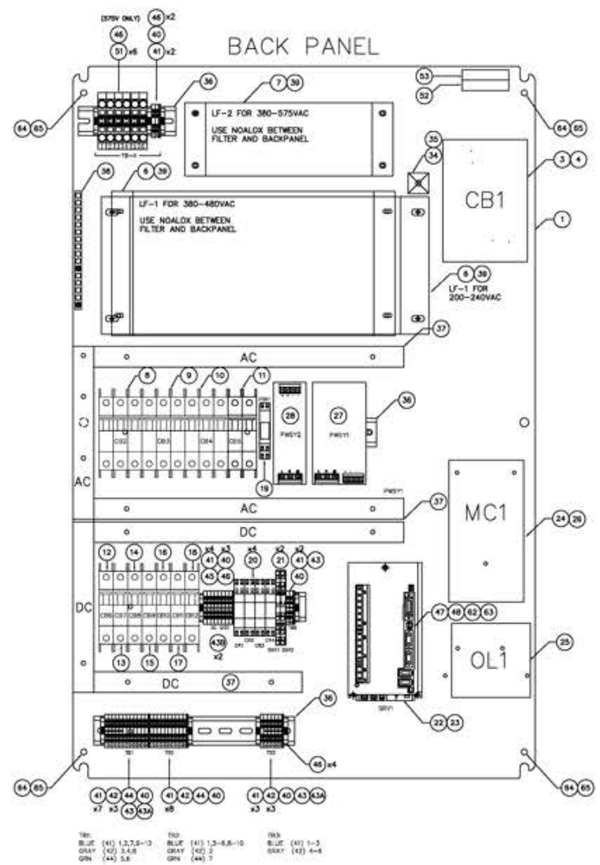

ITEM	QTY	DESCRIPTION	MFG	P/N
50	2	LARGE FERRITE	STEWARD	28A3851-0A2
49	1	SMALL FERRITE	STEWARD	28A0640-0A2
48	1	CN3 CONNECTOR	3M	10120-3000PE
47	1	CN3 CONNECTOR	3M	10320-52F0-008
46	19	STOP BLOCK	WAGO	249-116
45	1	END PLATE	WAGO	2006-1292
44	5	TERM BLOCK, 5mm, GREEN/YELLOW, GROUND	WAGO	2002-1207
43C	1	JUMPER, 5 PIN	WAGO	2002-405
43B	3	JUMPER, 4 PIN	WAGO	2002-404
43A	3	JUMPER, 3 PIN	WAGO	2002-403
43	3	JUMPER, 2 PIN	WAGO	2002-402
42	10	TERM BLOCK, 5mm, GRAY	WAGO	2002-1201
41	28	TERM BLOCK, 5mm, BLUE	WAGO	2002-1204
40	8	END PLATE, GRN	WAGO	2002-1292
39	12	TERMINAL INSULATORS, BLACK, 380-460VAC	VTE	800NSV14
39	6	TERMINAL INSULATORS, BLACK, 200-230VAC & 575VAC	VTE	800NSV14
38	1	GROUND BAR	EATON	GBK14
37	3	WIRE DUCT	ABB	QD100X300HW
36	3	DIN RAIL	EATON	XBANS3575PL
35	1	STANDOFF FOR SWING OUT PANEL, CUT TO 6"	MCMASTER	4706ST209
34	1	THUMB SCREW FOR SWING OUT PANEL STANDOFF	MCMASTER	97008A612
33	1	SSCNET III CABLE, 1 METER	MITSUBISHI	MR-J3BUS1M
32	1	PLC	MITSUBISHI	FX3U-16MT/DSS
31	1	8 PIN MINI-DIN 8-CABLE - P/N CS-DNPDMBMMQ2-015	AMPHENOL	SEE DESCRIPTION
30	1	FX3U SSCNENT 2 AXIS POSITIONING MODULE	MITSUBISHI	FX3U-20SSC-H
29	1	MC2, CONTACTOR, NON-REVERSING, 9A, 24VDC COIL	EATON	XTRMC10A40TD
28	1	PWS2, POWER SUPPLY, 24VDC, 120W FOR 380-575VAC	PULS	CTS.241
28	1	PWS2, POWER SUPPLY, 24VDC, 120W FOR 200-230VAC	PULS	CSS.241
27	1	PWS1, POWER SUPPLY, 24VDC, 480W, FOR 380-575VAC	PULS	QT70.241
27	1	PWS1, POWER SUPPLY, 24VDC, 480W, FOR 200-230VAC	PULS	QS20.241
26	1	AUX CONTACTS FOR MC1	EATON	XTCE018G20
25	1	OVERLOAD RELAY, 24A-40A, FOR 460V-575VAC	EATON	XTOB040DC1
25	1	OVERLOAD RELAY, 50A-65A, FOR 380-415VAC	EATON	XTOB057DC1
25	1	OVERLOAD RELAY, 70A-100A, FOR 200-230VAC	EATON	XTOB100DC1
24	1	MC1, CONTACTOR, 40A, 24VDC, FOR 380 - 600VAC	EATON	XTCE040G00TD
24	1	MC1, CONTACTOR, 80A, 24VDC, FOR 200 -230VAC	EATON	XTCE080F00TD
23	1	ENCODER CABLE, 2M	MITSUBISHI	MR-J3ENSCBL2M-H
22	1	SERVO AMP, 2KW, 400V FOR 380 - 575VAC	MITSUBISHI	MR-J3-200B4
22	1	SERVO AMP, 2KW, 400V FOR 200 - 230VAC	MITSUBISHI	MR-J3-200B5
21	2	SSR1, SSR2, SOLID STATE RELAY	WAGO	859-740
20	4	CR1, CR2, CR3, CR4, RELAY, DPDT	WAGO	788-312
19	1	PHASE SEQUENCE RELAY	TELEMECANIQUE	RM4TG20
18	1	CB12, CIRCUIT BREAKER, 1 POLE, 3A, FOR ALL VOLTAGES	TELEMECANIQUE	60104
17	1	CB11, CIRCUIT BREAKER, 1 POLE, 2A, FOR ALL VOLTAGES	TELEMECANIQUE	60103
16	1	CB10, CIRCUIT BREAKER, 1 POLE, 1A, FOR ALL VOLTAGES	TELEMECANIQUE	60101
15	1	CB9, CIRCUIT BREAKER, 1 POLE, 5A, FOR ALL VOLTAGES	TELEMECANIQUE	60106
14	1	CB8, CIRCUIT BREAKER, 1 POLE, 2A, FOR ALL VOLTAGES	TELEMECANIQUE	60103
13	1	CB7, CIRCUIT BREAKER, 1 POLE, 8A, FOR ALL VOLTAGES	TELEMECANIQUE	60109
12	1	CB6, CIRCUIT BREAKER, 1 POLE, 2A, FOR ALL VOLTAGES	TELEMECANIQUE	60103
11	1	CB5, CIRCUIT BREAKER, 2 POLE, 6A, FOR 380-575VAC	TELEMECANIQUE	MGN61317
11	1	CB5, CIRCUIT BREAKER, 2 POLE, 10A, FOR 200 230VAC	TELEMECANIQUE	60144
10	1	CB4, CIRCUIT BREAKER, 3 POLE, 6A, FOR 380-575VAC	TELEMECANIQUE	MGN61328
10	1	CB4, CIRCUIT BREAKER, 2 POLE, 10A, FOR 200-230VAC	TELEMECANIQUE	60144
9	1	CB3, CIRCUIT BREAKER, 3 POLE, 15A, FOR 380-575VAC	TELEMECANIQUE	MGN61331
9	1	CB3, CIRCUIT BREAKER, 3 POLE, 20A, FOR 200-230VAC	TELEMECANIQUE	60180
8	1	CB2, CIRCUIT BREAKER, 3 POLE, 1A, FOR 380-575VAC	TELEMECANIQUE	MGN61336
8	1	CB2, CIRCUIT BREAKER, 3 POLE, 1A, FOR 200-230VAC	TELEMECANIQUE	60168
7	1	LF2, LINE FILTER, 15A, FOR 380 - 460VAC	RADIUS POWER	RP325-15-1000-S
7	1	LF2, LINE FILTER, 15A, FOR 575VAC	RADIUS POWER	RP380-15-1000-S
6A	1	LF1, MOUNTING KIT, FOR 380 - 460VAC	CORCOM	AA405
6	1	LF1, LINE FILTER, 60A, FOR 380 - 460VAC	CORCOM	6GAYT6C-F7477
6	1	LF1, LINE FILTER, 100A FOR 200 - 230VAC	RADIUS POWER	RP325-100-1000S
		SEE ITEMS 60 & 61 FOR DISCONNECT LUG KITS		
4	1	DISCONNECT KIT FOR TS3N BREAKER - 575VAC	ABB	KTS3-VDM
4	1	DISCONNECT KIT FOR T1N & T3N BREAKER	ABB	KT3VD-M
3	1	CB1, MAIN BREAKER, 60A, FOR 575VAC	ABB	TS3N060TW
3	1	CB1, MAIN BREAKER, 80A, FOR 380 - 460VAC	ABB	T1N080TL
3	1	CB1, MAIN BREAKER, 150A, FOR 200 - 230VAC	ABB	T3N150TW
2	1	SWING OUT PANEL	AUTOMATION SOLUTIONS	K00031
1	1	BACK PANEL	AUTOMATION SOLUTIONS	H00029

NOTE: FOR DUPLICATE ITEM NUMBERS, SELECT ITEM BY INPUT VOLTAGE OF PANEL. SEE SCHEMATIC C00088 FOR REFERENCE.

BILL OF MATERIALS

65	10	1/4-20 KEPS NUT	McMASTER	90675A029	60	1	CB1, LUG KIT FOR MAIN BREAKER FOR 200 - 230VAC	ABB	KT3225-3	S3	1	575V LABEL - 2.25 X .5	MCMASTER	58947923			
64	5	1/4-20 x 3/4" GND BOLT	McMASTER	91309A540	58	2	3/8" GRADE 2 NYLON-INSERT THIN HEX LOCKNUT	MCMASTER	90566A031	S3	1	460V LABEL - 2.25 X .5	MCMASTER	58947863			
63	1	ENCODER CONNECTOR KIT	MITSUBISHI	MR-J3SCNS	57	2	3/4" OD NEOPRENE SEALING WASHER	MCMASTER	9470VA418	S3	1	415V LABEL - 2.25 X .5	PANDUIT	PCV-415CY			
62	1	SERVO SAFETY CABLE PIGTAIL	MITSUBISHI	MR-D05UDL3M-B	56	2	1.5" OD, ZINC PLATED STEEL FLAT WASHER	MCMASTER	91090A115	S3	1	380V LABEL - 2.25 X .5	MCMASTER	58947913			
61	1	CB1, LUG KIT FOR MAIN BREAKER, OUTGOING LUGS FOR 575V	ABB	K41BC	55	4	1.5" OD LOW-FRICTION PTFE FLAT WASHER	MCMASTER	9563VA487	S3	1	230V LABEL - 2.25 X .5	MCMASTER	58947833			
60	1	CB1, LUG KIT FOR MAIN BREAKER, INCOMING LUGS FOR 575V	ABB	K3TA	54	2	3/8 X 1" MS, 18-8SS PAN HEAD	MCMASTER	91772A677	S3	1	208V LABEL - 2.25 X .5	MCMASTER	58947843			
										S2	1	THREE PHASE LABEL - 2.25 X .5	MCMASTER	58947416			
										S1	6	TERM BLOCK, 10MM, GRAY, 575VAC	WAGO	2006-1201			

EXCEPT AS NOTED DIMENSIONS ARE IN INCHES PER ASME Y14.5
.X ±.030
.XX ±.010
.XXX ±.005
ANGLES ±.5°
MATERIAL
COSMETIC CLASS EXCEPT AS NOTED A

CLIMAX
Portable Machining & Welding Systems

CM6200 ROTARY MILL
MULTIPLE VOLTAGES

SIZE D | CAGE CODE 15509 | DWG NO. B00116 | REVISION K
SCALE NONE | SHEET 2 OF 2

ABBILDUNG B-7. MR-J3 BEDIENFELD INNENMONTAGEBLECH 2 (P/N B00116)

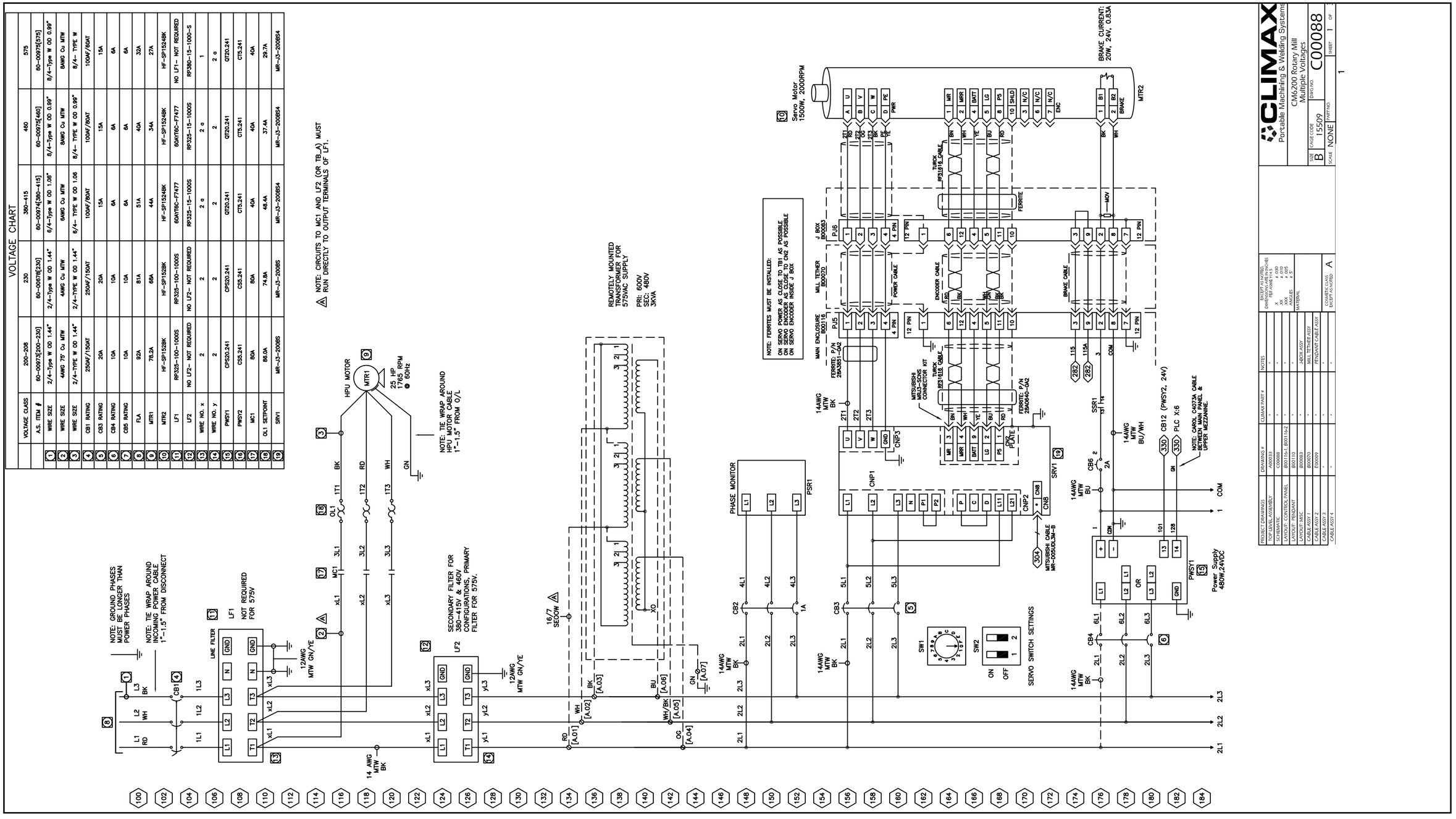

ABBILDUNG B-8. MR-J3 SCHALTPLAN 1 (P/N C00088)

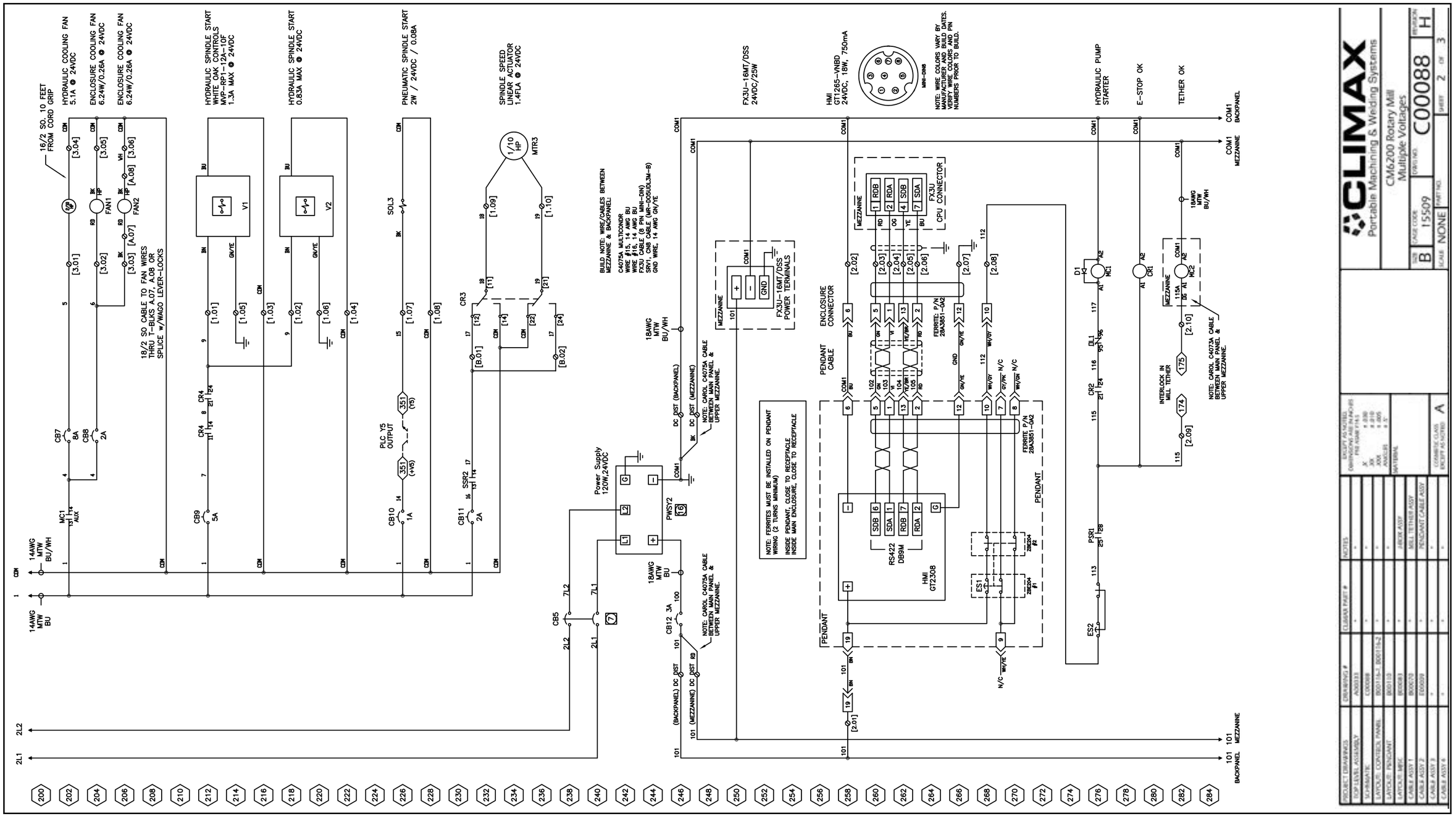

ABBILDUNG B-9. MR-J3 SCHALTPLAN 2 (P/N C00088)

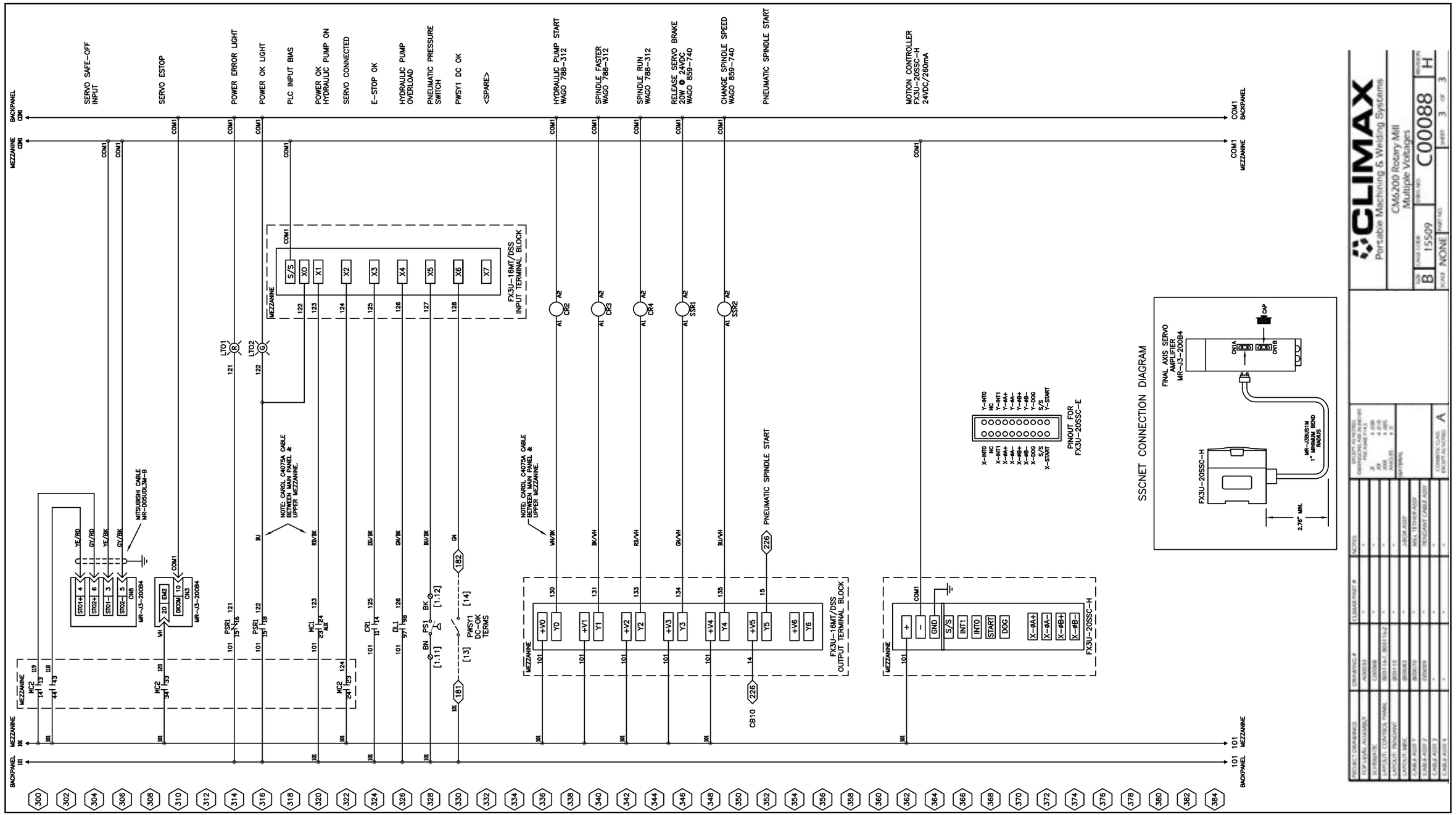

ABBILDUNG B-10. MR-J3 SCHALTPLAN 3 (P/N C00088)

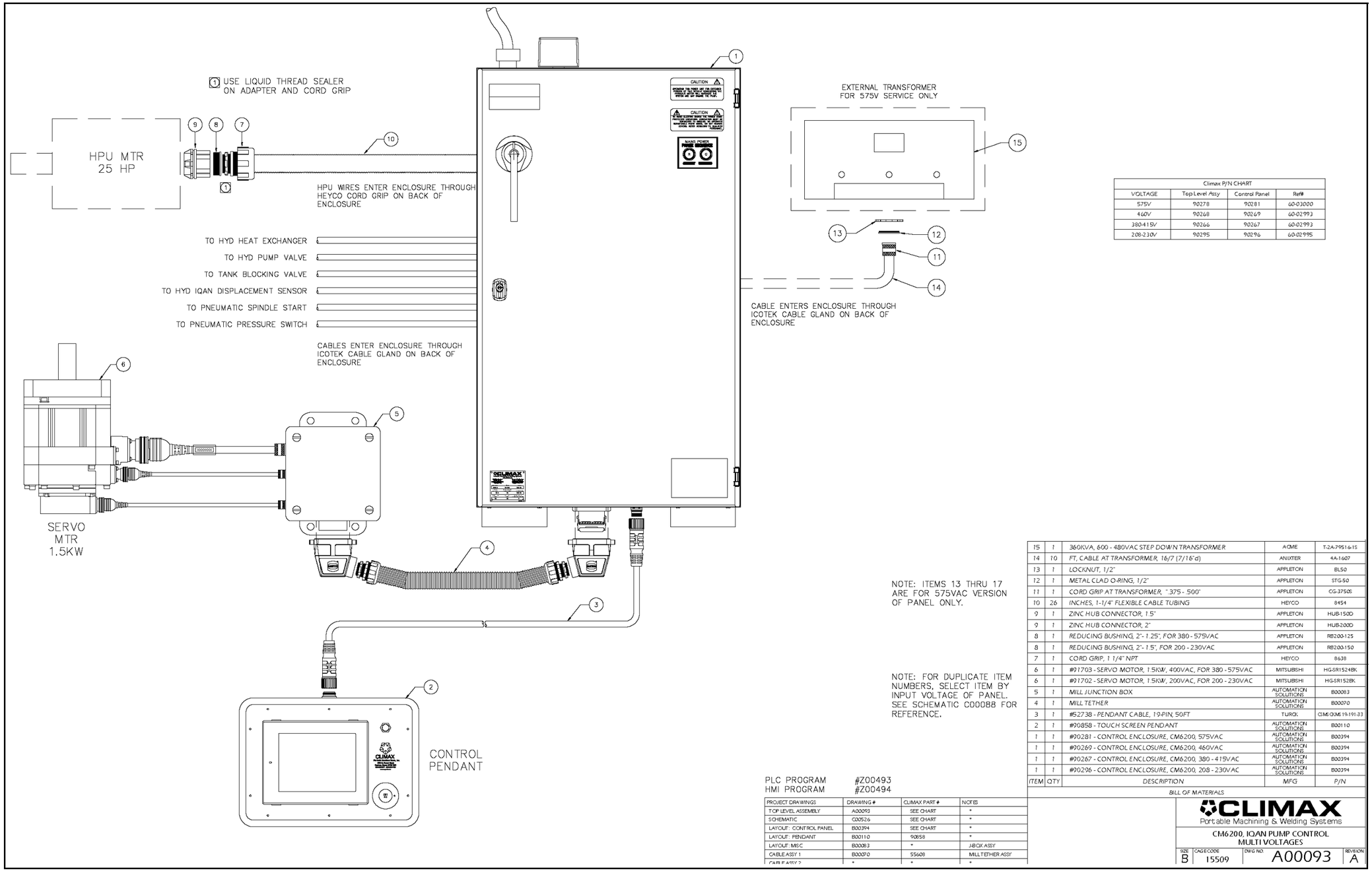

Climax P/N CHART			
VOLTAGE	Top Level Assy	Control Panel	Ref#
575V	90278	90281	60-03000
460V	90268	90269	60-02993
380-415V	90266	90267	60-02993
208-230V	90295	90296	60-02995

NOTE: ITEMS 13 THRU 17 ARE FOR 575VAC VERSION OF PANEL ONLY.

NOTE: FOR DUPLICATE ITEM NUMBERS, SELECT ITEM BY INPUT VOLTAGE OF PANEL. SEE SCHEMATIC C00088 FOR REFERENCE.

ITEM	QTY	DESCRIPTION	MFG	P/N
15	1	360KVA, 600 - 480VAC STEP DOWN TRANSFORMER	ACME	T-2A-79516-1S
14	10	FT, CABLE AT TRANSFORMER, 16/7 (7/16"d)	ANIXTER	4A-1607
13	1	LOCKNUT, 1/2"	APPLETON	BL50
12	1	METAL CLAD O-RING, 1/2"	APPLETON	STG-50
11	1	CORD GRIP AT TRANSFORMER, ".375 - .500"	APPLETON	CG-3750S
10	26	INCHES, 1-1/4" FLEXIBLE CABLE TUBING	HEYCO	8454
9	1	ZINC HUB CONNECTOR, 1.5"	APPLETON	HUB-150D
9	1	ZINC HUB CONNECTOR, 2"	APPLETON	HUB-200D
8	1	REDUCING BUSHING, 2"- 1.25", FOR 380 - 575VAC	APPLETON	RB200-125
8	1	REDUCING BUSHING, 2"- 1.5", FOR 200 - 230VAC	APPLETON	RB200-150
7	1	CORD GRIP, 1 1/4" NPT	HEYCO	8638
6	1	#91703 - SERVO MOTOR, 1.5KW, 400VAC, FOR 380 - 575VAC	MITSUBISHI	HG-SR1524BK
6	1	#91702 - SERVO MOTOR, 1.5KW, 200VAC, FOR 200 - 230VAC	MITSUBISHI	HG-SR152BK
5	1	MILL JUNCTION BOX	AUTOMATION SOLUTIONS	B00083
4	1	MILL TETHER	AUTOMATION SOLUTIONS	B00070
3	1	#52738 - PENDANT CABLE, 19-PIN, 50FT	TUROL	CIMS-CKM-19-191-33
2	1	#90858 - TOUCH SCREEN PENDANT	AUTOMATION SOLUTIONS	B00110
1	1	#90281 - CONTROL ENCLOSURE, CM6200, 575VAC	AUTOMATION SOLUTIONS	B00394
1	1	#90269 - CONTROL ENCLOSURE, CM6200, 460VAC	AUTOMATION SOLUTIONS	B00394
1	1	#90267 - CONTROL ENCLOSURE, CM6200, 380 - 415VAC	AUTOMATION SOLUTIONS	B00394
1	1	#90296 - CONTROL ENCLOSURE, CM6200, 208 - 230VAC	AUTOMATION SOLUTIONS	B00394

BILL OF MATERIALS

PLC PROGRAM #Z00493
HMI PROGRAM #Z00494

PROJECT DRAWINGS	DRAWING #	CLIMAX PART #	NOTES
TOP LEVEL ASSEMBLY	A00093	SEE CHART	*
SCHEMATIC	C00526	SEE CHART	*
LAYOUT: CONTROL PANEL	B00394	SEE CHART	*
LAYOUT: PENDANT	B00110	90858	*
LAYOUT: MISC	B00083	*	JBOX ASSY
CABLE ASSY 1	B00070	55608	MILL TETHER ASSY
CABLE ASSY 2	*	*	*

ABBILDUNG B-11. MR-J4 LAYOUT (P/N A00093)

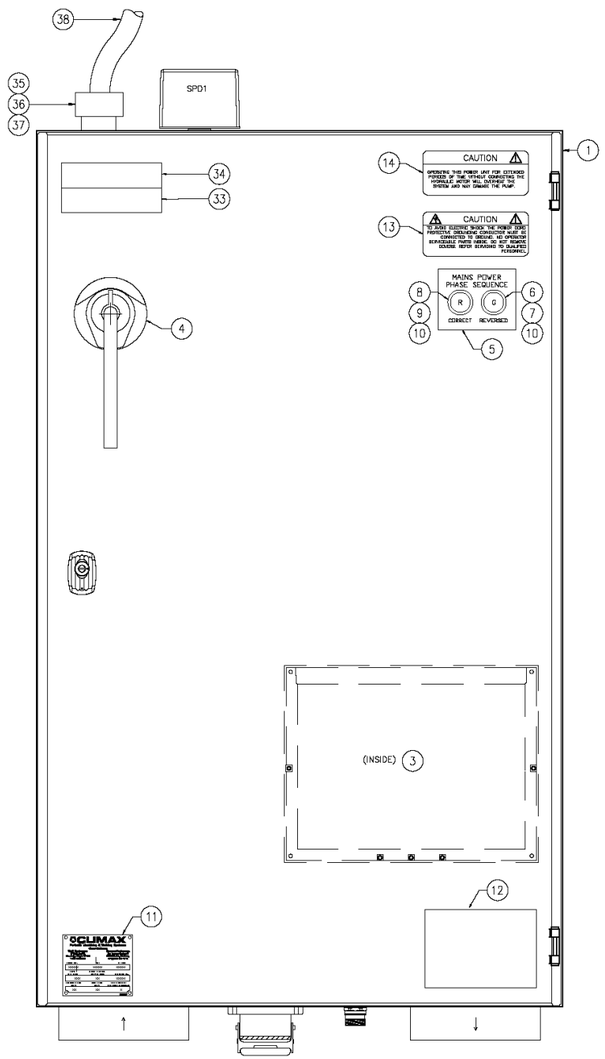

ENCLOSURE FRONT VIEW

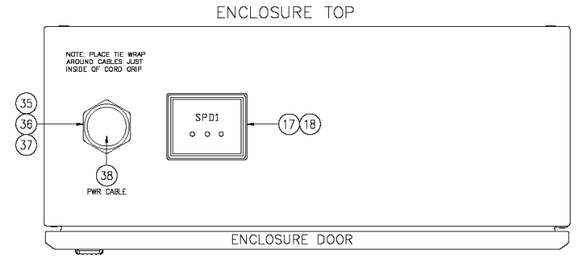

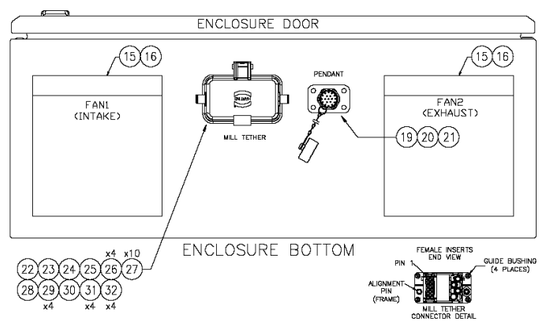

ITEM	QTY	DESCRIPTION	MFG	P/N
38	11	FT, PORTABLE POWER CORD, 8/4, TYPE W/ FOR 460-575VAC	ANIXTER	SB-0804C
38	11	FT, PORTABLE POWER CORD, 4/4, TYPE W/ FOR 208-240VAC	ANIXTER	SB-0404C
37	1	SEALING GASKET, 1-1/4", FOR 380-460VAC	APPLETON	STG-125
37	1	SEALING GASKET, 1-1/2", FOR 208-240VAC	APPLETON	STG-150
36	1	LOCKNUT, 1-1/4", FOR 380-460VAC	APPLETON	BL125
36	1	LOCKNUT, 1-1/2", FOR 208-240VAC	APPLETON	BL150
35	1	CORD GRIP, 1-1/4", MAIN POWER, FOR 380-460VAC	APPLETON	CG-100125B
35	1	CORD GRIP, 1-1/2", MAIN POWER, FOR 208-240VAC	APPLETON	CG-128150B
34	1	575V LABEL - 4.5 X 1.125	MCMASTER	5894T922
34	1	460V LABEL - 4.5 X 1.125	MCMASTER	5894T862
34	1	380V LABEL - 4.5 X 1.125	MCMASTER	5894T912
34	1	230V LABEL - 4.5 X 1.125	MCMASTER	5894T832
34	1	208V LABEL - 4.5 X 1.125	MCMASTER	5894T842
33	1	THREE PHASE LABEL - 4.5 X 1.125	MCMASTER	5894T4
32	4	GUIDE BUSHINGS	HARTING	09 14 000 9909
31	4	HAN MODULAR CONNECTOR, CONTACT, FEMALE, AWG 18	HARTING	09 15 000 6262
30	1	HAN MODULAR CONNECTOR, FEMALE INSERT, 7 PIN	HARTING	09 14 007 3101
29	4	HAN MODULAR CONNECTOR, CONTACT, FEMALE, AWG 14	HARTING	09 32 000 6205
28	1	HAN MODULAR CONNECTOR, HOUSING, BULKHEAD MOUNT	HARTING	09 30 010 0318
27	10	HAN MODULAR CONNECTOR, CONTACT, FEMALE AWG 26-22	HARTING	09 15 000 6224
26	4	HAN MODULAR CONNECTOR, CONTACT, FEMALE AWG 16	HARTING	09 15 000 6201
25	1	HAN MODULAR CONNECTOR, FEMALE INSERT, 12 PIN	HARTING	09 14 012 3101
24	1	HAN MODULAR CONECTOR, FRAME FOR 3 MODULES	HARTING	09 14 010 0303
23	1	HAN MODULAR CONNECTOR, FEMALE INSERT, 4 PINS	HARTING	09 14 004 3141
22	1	HAN MODULAR CONNECTOR, DUMMY MODULE	HARTING	09 14 000 9950
21	1	CLOSURE CAP, PENDANT CONNECTOR	TURCK	CK-CC
20	1	SUPPORT PLATE FOR CKM CMS SUPPORT PLATE	AUTOMATION SOLUTIONS	H00052
19	1	CONNECTOR, PENDANT, 19 PIN, FEMALE	TURCK	CKFD 19-19-1
18	1	NEOPRENE SEALING GASKET, 1/2"	APPLETON	STG-50
17	1	SURGE ARRESTER & POWER CONDITIONER	SCHNEIDER	SDEA3 050
16	2	EXHAUST	HABWA	3142-0148-00-07
15	2	FANS, 24VDC	ORION	OD1238-24HB
14	1	15396 - LABEL, CAUTION HYDRAULIC OVERHEAT	CLIMAX	15396
13	1	37576 - CAUTION LABEL	CLIMAX	N00042
12	1	ARC FLASH WARNING LABEL	SAFETYSIGN	JS543-JF
11	1	39125 - NAMEPLATE FOR ELECTRICAL PANELS	AUTOMATION SOLUTIONS	N00002
10	2	MOUNTING BASE	TELEMECANIQUE	ZB4BZ009
9	1	LIGHT MODULE, RED, 24V-120V	SCHNEIDER	ZBVB64
8	1	PILOT LIGHT HEAD, RED	SCHNEIDER	ZB4BV043
7	1	LIGHT MODULE, GREEN, 24V-120V	SCHNEIDER	ZBVB63
6	1	PILOT LIGHT HEAD, GREEN	SCHNEIDER	ZB4BV033
5	1	PHASE SEQUENCE LEGEND PLATE	AUTOMATION SOLUTIONS	F00011
4	1	MAIN DISCONNECT NEMA4 HANDLE ASSY	SCHNEIDER	9421LH4GRY
3	1	PRINT POCKET, A4 (INSIDE FRONT DOOR)	SCHNEIDER	NSYDPA4
2	1	DOOR RETAINER	SCHNEIDER	NSYAEDRC3T
1	1	ENCLOSURE, 36"X24"X12"	SCHNEIDER	NSYS3DC10625

BILL OF MATERIALS

Climax P/N CHART		
VOLTAGE	Control Panel	Ref#
575V	90281	60-03000
380-460V	90267/90269	60-02993
208-230V	90296	60-02995

PROJECT DRAWINGS	DRAWING #	CLIMAX PART #	NOTES
TOP LEVEL ASSEMBLY	A00093	*	*
SCHEMATIC	C00526	*	*
LAYOUT: CONTROL PANEL	B00394	SEE CHART	*
LAYOUT: PENDANT	B00110	90858	*
LAYOUT: MISC	B00283	*	J-BOX ASSY
CABLE ASSY 1	B00070	55608	MILL TETHER ASSY
CABLE ASSY 2	*	*	*
ENCLOSURE TEMPLATE			*

EXCEPT AS NOTED, DIMENSIONS ARE IN INCHES PER ASME Y14.5
.X ± .010
.XX ± .010
.XXX ± .005
ANGLES ± 5°

MATERIAL

COSMETIC CLASS EXCEPT AS NOTED A

ADDITIONAL INFORMATION AND SPECIFICATIONS REQUIRED TO MANUFACTURE THE PART ARE PROVIDED IN CLIMAX SPEC. P100

DRAWN RG DATE 5/26/18
CHECKED DATE
APPROVED: DATE
CAD/CAM STD 4

CLIMAX
Portable Machining & Welding Systems

CM6200 w/ IQAN PUMP CONTROL
MULTI VOLTAGES

SIZE B | CAGE CODE 15509 | DWG NO. B00394 | REVISION A
SCALE 1:1 | P/N SEE CHART | SHEET 1 OF 2

ABBILDUNG B-12. MR-J4 BEDIENFELD BAUGRUPPE AUßEN (P/N B000394)

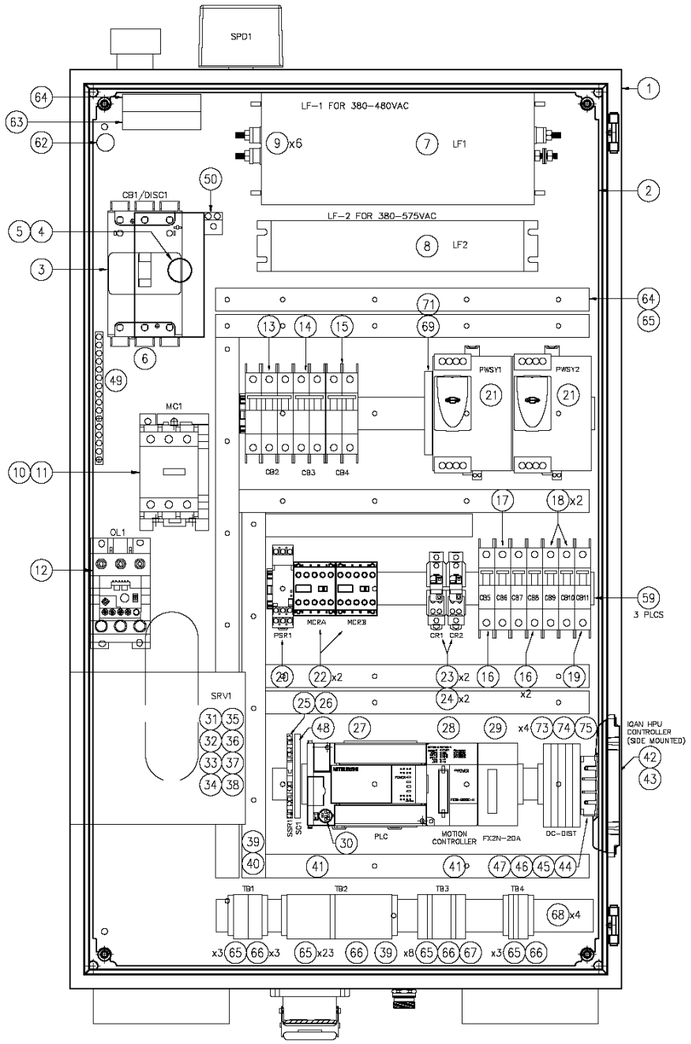

CONTROLS ENCLOSURE
(INSIDE VIEW)

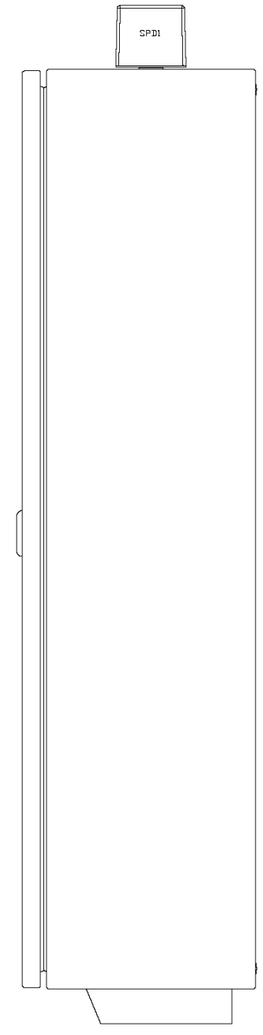

RIGHT SIDE VIEW

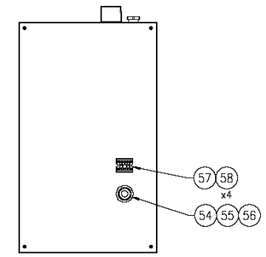

BACK VIEW
(¼ SCALE)

ITEM	QTY	DESCRIPTION	MFG	P/N
78	4	1/4-20 HEX NUT	McMASTER	90473A029
77	4	1/4-20 KEPS NUT	McMASTER	90675A029
76	2	1/4-20 x 3/4" GND BOLT	McMASTER	91309A540
75	1	JUMPER, 4 PIN	WAGO	2002-404
74	1	JUMPER, 3 PIN	WAGO	2002-403
73	3	JUMPER, 2 PIN	WAGO	2002-402
72	18	T-BLOCK END STOPS	WAGO	249-116
71	3	END PLATE, ORANGE	WAGO	2002-1492
70	1	T-BLOCK, 4 CONDR, GRN/YE	WAGO	2002-1407
69	5	T-BLOCK, 4 CONDR, GRAY	WAGO	2002-1401
68	4	END PLATE, ORN	WAGO	2002-1292
67	1	TERM BLOCK, 5mm, GREEN/YELLOW, GROUND	WAGO	2002-1207
66	6	TERM BLOCK, 5mm, GRAY	WAGO	2002-1201
65	37	TERM BLOCK, 5mm, BLUE	WAGO	2002-1204
64	1	460V LABEL - 2.25 X.5	McMASTER	5894TB63
64	1	380V LABEL - 2.25 X.5	McMASTER	5894T913
64	1	230V LABEL - 2.25 X.5	McMASTER	5894TB33
64	1	208V LABEL - 2.25 X.5	McMASTER	5894TB43
63	1	THREE PHASE LABEL - 2.25 X.5	McMASTER	5894T6
62	1	PROTECTIVE EARTH LABEL	PANDUIT	PRESS-A-PE
61	1	WIRE DUCT COVER	MULTIPLE	MULTIPLE
60	1	WIRE DUCT	MULTIPLE	MULTIPLE
59	1	DINRAIL	MULTIPLE	MULTIPLE

ITEM	QTY	DESCRIPTION	MFG	P/N
58	4	10-32 x5/8" BHCS, GLAND MOUNTINGSCREW	McMASTER	92949A267
57	1	CABLE GLAND	ICOTEK	KEL-DPZ-817 GY
56	1	SEALING GASKET, 1-1/4"	APPLETON	STG-125
55	1	LOCKNUT, 1-1/4"	APPLETON	EL125
54	1	PVC CONNECTOR, 1-1/4", BLACK	HEYCO	8638
53	1	GROUND LUG	MULTIPLE	MULTIPLE
52	1	GROUND BAR	EATON	GBK14
48	1	SIGNAL CONDITIONER	WAGO	857-412
47	2	TERMINAL, 14AWG	Yazaki	7116-4152-02
46	23	TERMINAL	MOLEX	33467-0024
45	1	CONNECTOR COVER	MOLEX	34505-0003
44	1	DUAL ROW RT ANGLE HEADER	MOLEX	34822-0013
43	1	IQAN HPU CONTROLLER ID TAG	PARKER	20085110
42	1	IQAN HPU CONTROLLER	PARKER	MC41
41	2	FERRITE, 122 OHMS 100MHz	LAIRD	28B0870-100
40	1	SMALL FERRITE, SPLIT/SNAP-ON, 240 OHMS 100MHZ	LAIRD	28A0640-0A2
39	2	LARGE FERRITE, SPLIT/SNAP-ON, 260 OHMS 100MHz	LAIRD	28A3851-0A2
38	1	CN3 CONNECTOR	3M	10120-3000PE
37	1	CN3 CONNECTOR	3M	10320-52F0-008
36	1	SERVO SAFETY CABLE PIGTAIL	MITSUBISHI	MR-D05UDL3M-B
35	3	FT, ENCODER CABLE	TUROK	RF51616
34	1	ENCODER CONNECTOR KIT	MITSUBISHI	MR-J3SCN8
33	1	SSCNET III CABLE, 1 METER	MITSUBISHI	MR-J3BUS1M
32	1	SERVO AMP, 2KW, 400V FOR 380 - 575VAC	MITSUBISHI	MR-J4-200B4-RJ
31	1	SERVO AMP, 2KW, 200V FOR 200 - 230VAC	MITSUBISHI	MR-J4-200B-RJ
30	1	8 PIN MINI-DIN 8 CABLE	L-COM	DX238MM-15
29	1	DIGITAL TO ANALOG MODULE	MITSUBISHI	FX2N-2DA
28	1	FX3U SSCNENT 2 AXIS POSITIONING MODULE	MITSUBISHI	FX3U-20SSC-H
27	1	PLC BASE, 8 IN/ 8 OUT	MITSUBISHI	FX3U-16MT/DS
26	1	SSR1: SOLID STATE RELAY	SCHNEIDER	SSL1D038D
25	1	SSR1: RELAY BASE	SCHNEIDER	SSL2RA1
24	2	CR1, CR2: RELAY SOCKET	SCHNEIDER	RPZF1
23	2	CR1, CR2: RELAY, 1 C/O	SCHNEIDER	RPM12BD
22	2	MCRA, MCRB: RELAY, 3NO, 1NC, 24VDC COIL	SCHNEIDER	CA3KN40BD
21	2	POWER SUPPLY, 24VDC, 10A	SCHNEIDER	ABL8RPS24100
20	1	PSR1: PHASE SEQUENCE RELAY	SCHNEIDER	RM22TG20
19	1	CB11, CIRCUIT BREAKER, 1A, 1 POLE	SCHNEIDER	60101
18	2	CB9, CB10: CIRCUIT BREAKER, 10A, 1 POLE	SCHNEIDER	60110
17	1	CB6, CIRCUIT BREAKER, 9A, 1 POLE	SCHNEIDER	60109
16	3	CB5, CB7, CB8: CIRCUIT BREAKER, 2A, 1 POLE	SCHNEIDER	60103
15	1	CB4: CIRCUIT BREAKER, 10A, 2 POLE, FOR 460VAC	SCHNEIDER	MGN61319
14	1	CB3: CIRCUIT BREAKER, 15A, 3 POLE, FOR 380-575VAC	SCHNEIDER	MGN61331
14	1	CB3, CIRCUIT BREAKER, 20A, 3 POLE, FOR 200-230VAC	SCHNEIDER	60180
13	1	CB2: CIRCUIT BREAKER, 1A, 3 POLE	SCHNEIDER	MGN61323
12	1	OL1: ELECTRONIC OVERLOAD RELAY	SCHNEIDER	LR9D1110S
11	1	MC1: AUX CONTACTS	SCHNEIDER	LADN20
10	1	MC1: CONTACTOR, 40A 24VDC, FOR 380-575VAC	SCHNEIDER	LC1D40BD
10	1	MC1: CONTACTOR, 80A 24VDC, FOR 208-240VAC	SCHNEIDER	LC1D80BD
9	6	TERMINAL INSULATORS, BLACK	VTE	800N5V14
8	1	LF2, LINE FILTER, 15A, FOR 575VAC	SCHAFFNER	FN2581-16-29
8	1	LF2, LINE FILTER, 15A, FOR 380 - 460VAC	SCHAFFNER	FN2581-16-29
7A	1	LF1, MOUNTING KIT, FOR 380 - 460VAC	CORCOM	AA465
7	1	LF1, LINE FILTER, 60A, FOR 380 - 460VAC	CORCOM	60AVT6-GF7477
7	1	LF1, LINE FILTER, 75A FOR 200 - 230VAC	SCHAFFNER	FN2581-75-34
6	1	DISTRIBUTION SET, 3/6, 14-6AWG	SCHNEIDER	PDC6BD6
5	1	DISC1: DISCONNECT SHAFT	SCHNEIDER	9421LS8
4	1	DISC1: MAIN DISCONNECT OPERATING MECHANISM	SCHNEIDER	9421LB7
3	1	CB1: CIRCUIT BREAKER, 35A, 3 POLE, FOR 575VAC	SCHNEIDER	BDL36035
3	1	CB1: CIRCUIT BREAKER, 60A, 3 POLE, FOR 380-460VAC	SCHNEIDER	BDL36060
3	1	CB1: CIRCUIT BREAKER, 90A, 3 POLE, FOR 230-240VAC	SCHNEIDER	BDL36090
3	1	CB1: CIRCUIT BREAKER, 110A, 3 POLE, FOR 208VAC	SCHNEIDER	BDL36110
2	1	BACK PANEL	AUTOMATION SOLUTIONS	H99603
1	1	ENCLOSURE, 36" X 24" X12"	SCHNEIDER	NSYS3DC10625

BILL OF MATERIALS

PLC PROGRAM #Z00493
HMI PROGRAM #Z00494

Climax P/N CHART		
VOLTAGE	Control Panel	Ref#
575V	90281	60-03000
380-460V	90267/90269	60-02993
208-230V	90296	60-02995

PROJECT DRAWINGS	DRAWING #	CLIMAX PART #	NOTES
TOP LEVEL ASSEMBLY	A00093	*	*
SCHEMATIC	C00526	*	*
LAYOUT: CONTROL PANEL	B00394	SEE CHART	*
LAYOUT: PENDANT	B00110	90858	*
LAYOUT: MISC	B00083	*	J-BOX ASSY
CABLE ASSY 1	B00070	55608	MILL TETHER ASSY
CABLE ASSY 2	*	*	*

EXCEPT AS NOTED DIMENSIONS ARE IN INCHES PER ASME Y14.5
.X ±.030
.XX ±.010
.XXX ±.005
ANGLES ±5°
MATERIAL

ADDITIONAL INFORMATION AND SPECIFICATIONS REQUIRED TO MANUFACTURE THE PART ARE PROVIDED IN CLIMAX SPEC. P100
DRAWN RG DATE 5/26/18
CHECKED DATE
APPROVED DATE

CLIMAX
Portable Machining & Welding Systems
CM6200 w/ IQAN PUMP CONTROL
MULTI VOLTAGES
SIZE B | CAGE CODE 15509 | DWG NO. B00394 | REVISION A

ABBILDUNG B-13. MR-J4 BEDIENFELD BAUGRUPPE INNEN (P/N B00394)

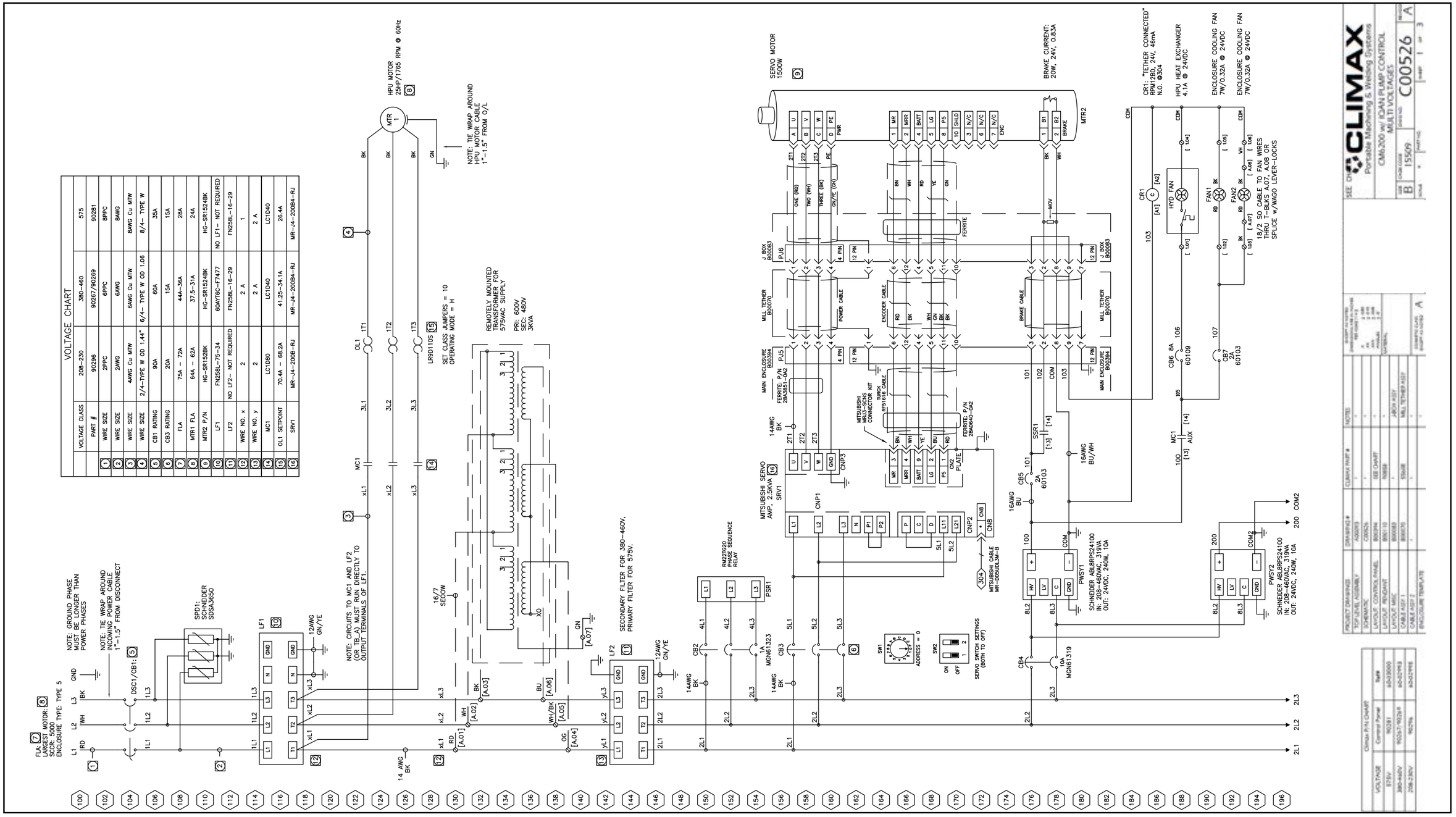

ABBILDUNG B-14. MR-J4 SCHALTPLAN 1 (P/N C00526)

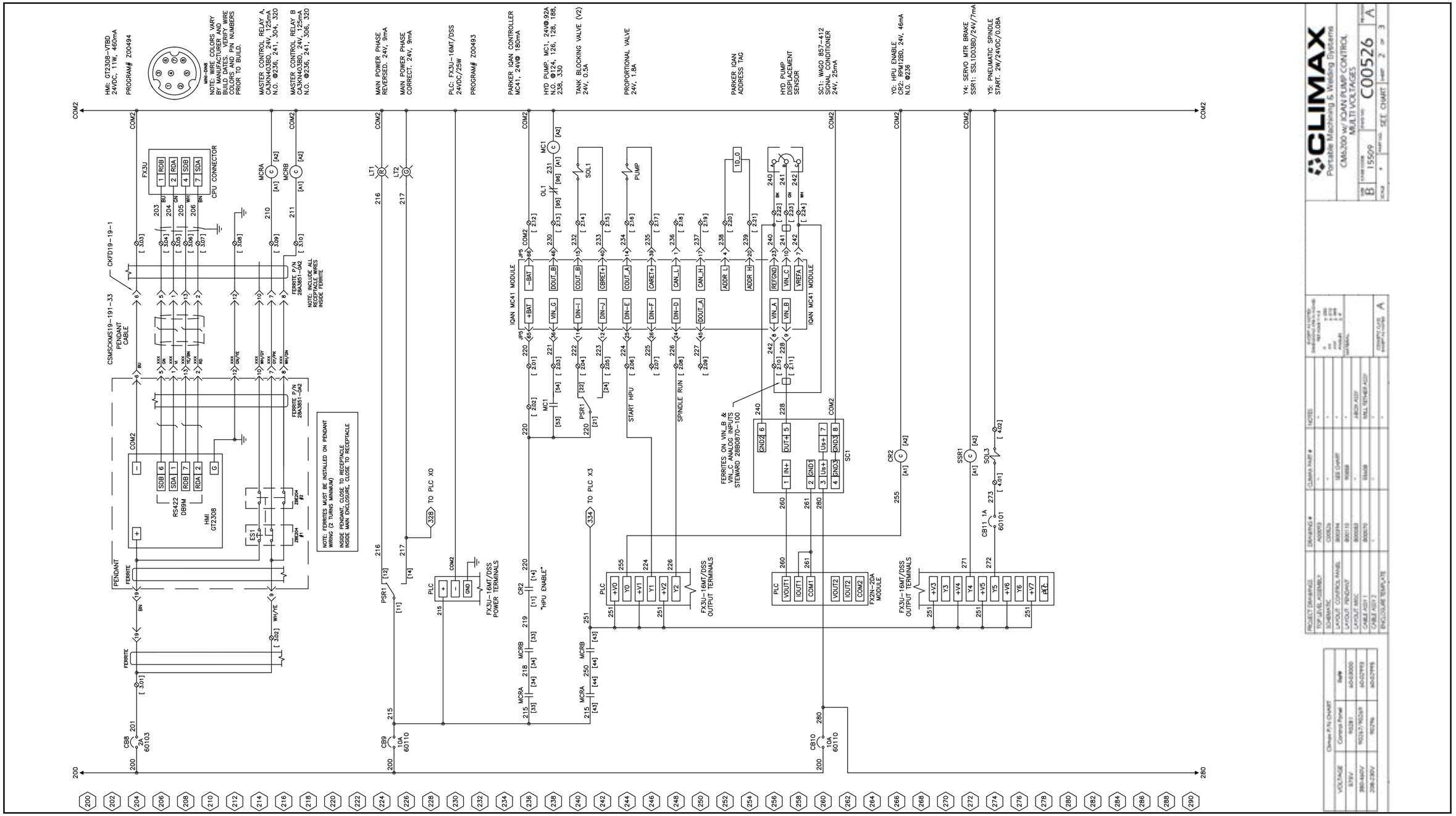

ABBILDUNG B-15. MR-J4 SCHALTPLAN2 (P/N C00526)

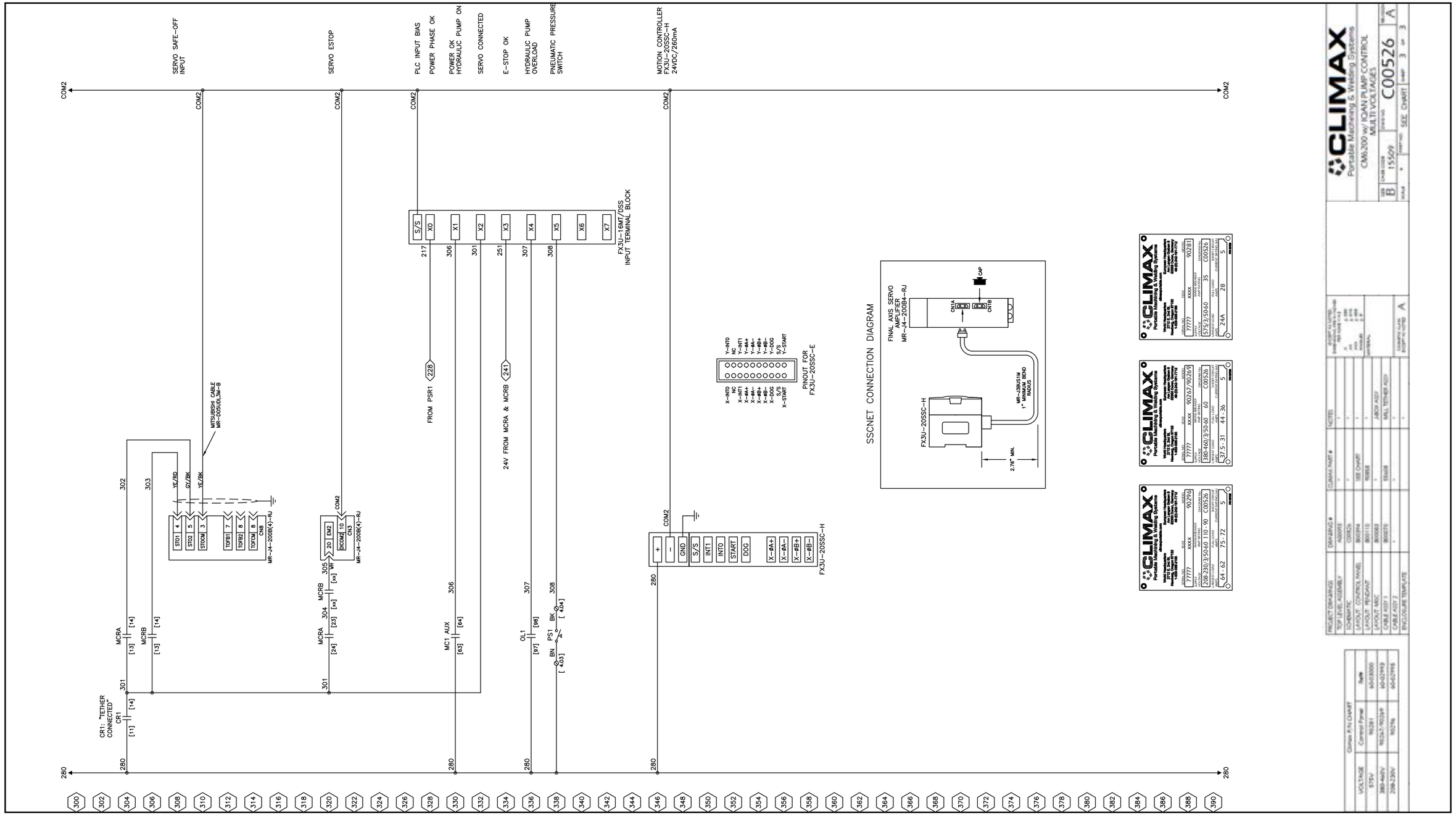

ABBILDUNG B-16. MR-J4 SCHALTPLAN 3 (P/N C00526)

Diese Seite bleibt leer

ANHANG C SDS

Die aktuellen Sicherheitsdatenblätter erhalten Sie von CLIMAX.

This page intentionally left blank

ANHANG D MR-J4 SERVO AMPLIFIER MANUAL

Für Probleme mit dem Anschlusskasten des MR-J4-Servomotors siehe folgende Seiten.

This page intentionally left blank

1 TROUBLESHOOTING FOR SERVO AMPLIFIER (DRIVE UNIT)

Point

- As soon as an alarm occurs, turn SON (Servo-on) off and interrupt the power.
- [AL. 37 Parameter error] and warnings (except [AL. F0 Tough drive warning]) are not recorded in the alarm history.
- [AL. 8D.1 CC-Link IE communication error 1] and [AL. 8D.2 CC-Link IE communication error 2] are not recorded in the alarm history. For MR-J4-_GF_(-RJ), these alarms are recorded by setting [Pr. PN06] to "_ _ _ 1".

When an error occurs during operation, the corresponding alarm or warning is displayed.

When an alarm occurs, ALM will turn off. Refer to the following and take the appropriate action.

☞ Page 30 Remedies for alarms

When an warning is displayed, refer to the following and take the appropriate action.

☞ Page 103 Remedies for warnings

1.1 Explanation for the lists

No./Name/Detail No./Detail name

Indicates each No./Name/Detail No./Detail name of alarms or warnings.

Stop method

For the alarms and warnings in which "SD" is written in the stop method column, the servo motor stops with the dynamic brake after forced stop deceleration. For the alarms and warnings in which "DB" or "EDB" is written in the stop method column, the servo motor stops with the dynamic brake without forced stop deceleration.

Alarm deactivation

After its cause has been removed, the alarm can be deactivated in any of the methods marked ○ in the alarm deactivation column. Warnings are automatically canceled after the cause of occurrence is removed. Alarms are deactivated with alarm reset, CPU reset, or cycling the power.

■MR-J4-_A_(-RJ)/MR-J4-DU_A_(-RJ)

Alarm deactivation	Explanation
Alarm reset	1. Turning on RES (Reset) with input device 2. Pushing the "SET" button while the display of the servo amplifier is the current alarm display status 3. Click "Occurring Alarm Reset" in the "Alarm Display" window of MR Configurator2
Cycling the power	Turning the power off and then turning it on again.

■MR-J4-_B_(-RJ010)/MR-J4W_-_B/MR-J4-DU_B_(-RJ)/MR-J4-_GF_(-RJ)

Alarm deactivation	Explanation
Alarm reset	1. Reset command from controller 2. Click "Occurring Alarm Reset" in the "Alarm Display" window of MR Configurator2
CPU reset	Resetting the controller itself
Cycling the power	Turning the power off and then turning it on again.

Processing system (only for MR-J4W_-_B_)

Processing system of alarms is as follows.

Each axis: Alarm is detected for each axis.

Common: Alarm is detected as the whole servo amplifier.

Stop system (only for MR-J4W_-_B_)

This means target axis to stop when the alarm occurs.
Each axis: Only alarming axis will stop.
All axes: All axes will stop.

Alarm code (only MR-J4-_A_(-RJ)/MR-J4-DU_A_(-RJ))

To output alarm codes, set [Pr. PD34] to "_ _ _ 1" when using an MR-J4-_A_(-RJ)/MR-J4-DU_A_(-RJ). Alarm codes are outputted by on/off of bit 0 to bit 2. Warnings ([AL. 90] to [AL. F3]) do not have alarm codes. The alarm codes in the following table will be outputted when they occur. The alarm codes will not be outputted in normal condition.
When using an MR-D01 extension IO unit, you can output alarm codes by setting [Pr. Po12] to "_ _ _ 1". Alarm codes are outputted by on/off of bit 0 to bit 3.

1.2 Alarm list

Alarm		Detail		Stop method *2*3	Alarm deactivation			Processing system *9	Stop system *9	Alarm code *8			
No.	Name	No.	Name		Alarm reset	CPU reset	Cycling the power			ACD3 (Bit 3)	ACD2 (Bit 2)	ACD1 (Bit 1)	ACD0 (Bit 0)
10	Undervoltage	10.1	Voltage drop in the control circuit power	EDB	○	○	○	Common	All axes	0	0	1	0
		10.2	Voltage drop in the main circuit power	SD	○	○	○	Common	All axes				
11	Switch setting error	11.1	Axis number setting error/ Station number setting error	DB	—	—	○	Common	All axes	—	—	—	—
		11.2	Disabling control axis setting error	DB	—	—	○	Common	All axes	—	—	—	—
12	Memory error 1 (RAM)	12.1	RAM error 1	DB	—	—	○	Common	All axes	0	0	0	0
		12.2	RAM error 2	DB	—	—	○	Common	All axes				
		12.3	RAM error 3	DB	—	—	○	Common	All axes				
		12.4	RAM error 4	DB	—	—	○	Common	All axes				
		12.5	RAM error 5	DB	—	—	○	Common	All axes				
		12.6	RAM error 6	DB	—	—	○	—	—	—	—	—	—
13	Clock error	13.1	Clock error 1	DB	—	—	○	Common	All axes	0	0	0	0
		13.2	Clock error 2	DB	—	—	○	Common	All axes				
		13.3	Clock error 3	DB	—	—	○	—	—	—	—	—	—
14	Control process error	14.1	Control process error 1	DB	—	—	○	Common	All axes	0	0	0	0
		14.2	Control process error 2	DB	—	—	○	Common	All axes				
		14.3	Control process error 3	DB	—	—	○	Common	All axes				
		14.4	Control process error 4	DB	—	—	○	Common	All axes				
		14.5	Control process error 5	DB	—	—	○	Common	All axes				
		14.6	Control process error 6	DB	—	—	○	Common	All axes				
		14.7	Control process error 7	DB	—	—	○	Common	All axes				
		14.8	Control process error 8	DB	—	—	○	Common	All axes				
		14.9	Control process error 9	DB	—	—	○	Common	All axes				
		14.A	Control process error 10	DB	—	—	○	Common	All axes				
		14.B	Control process error 11	DB	—	—	○	—	—	—	—	—	—
		14.C	Control process error 12	DB	—	—	○	—	—	—	—	—	—
		14.D	Control process error 13	DB	—	—	○	—	—	—	—	—	—

Alarm		Detail		Stop method *2*3	Alarm deactivation			Processing system *9	Stop system *9	Alarm code *8			
No.	Name	No.	Name		Alarm reset	CPU reset	Cycling the power			ACD3 (Bit 3)	ACD2 (Bit 2)	ACD1 (Bit 1)	ACD0 (Bit 0)
15	Memory error 2 (EEP-ROM)	15.1	EEP-ROM error at power on	DB	—	—	○	Common	All axes	0	0	0	0
		15.2	EEP-ROM error during operation	DB	—	—	○	Common	All axes				
		15.4	Home position information read error	DB	—	—	○	—	—				

Alarm		Detail		Stop method *2*3	Alarm deactivation			Processing system *9	Stop system *9	Alarm code *8			
No.	Name	No.	Name		Alarm reset	CPU reset	Cycling the power			ACD3 (Bit 3)	ACD2 (Bit 2)	ACD1 (Bit 1)	ACD0 (Bit 0)
16	Encoder initial communication error 1	16.1	Encoder initial communication - Receive data error 1	DB	—	—	○	Each axis	Each axis	0	1	1	0
		16.2	Encoder initial communication - Receive data error 2	DB	—	—	○	Each axis	Each axis				
		16.3	Encoder initial communication - Receive data error 3	DB	—	—	○	Each axis	Each axis				
		16.4	Encoder initial communication - Encoder malfunction *6	DB	—	—	○	Each axis	Each axis				
		16.5	Encoder initial communication - Transmission data error 1	DB	—	—	○	Each axis	Each axis				
		16.6	Encoder initial communication - Transmission data error 2	DB	—	—	○	Each axis	Each axis				
		16.7	Encoder initial communication - Transmission data error 3	DB	—	—	○	Each axis	Each axis				
		16.8	Encoder initial communication - Incompatible encoder *6	DB	—	—	○	Each axis	Each axis				
		16.A	Encoder initial communication - Process error 1	DB	—	—	○	Each axis	Each axis				
		16.B	Encoder initial communication - Process error 2	DB	—	—	○	Each axis	Each axis				
		16.C	Encoder initial communication - Process error 3	DB	—	—	○	Each axis	Each axis				
		16.D	Encoder initial communication - Process error 4	DB	—	—	○	Each axis	Each axis				
		16.E	Encoder initial communication - Process error 5	DB	—	—	○	Each axis	Each axis				
		16.F	Encoder initial communication - Process error 6	DB	—	—	○	Each axis	Each axis				

Alarm		Detail		Stop method *2*3	Alarm deactivation			Processing system *9	Stop system *9	Alarm code *8			
No.	Name	No.	Name		Alarm reset	CPU reset	Cycling the power			ACD3 (Bit 3)	ACD2 (Bit 2)	ACD1 (Bit 1)	ACD0 (Bit 0)
17	Board error	17.1	Board error 1	DB	—	—	○	Common	All axes	0	0	0	0
		17.3	Board error 2	DB	—	—	○	Common	All axes				
		17.4	Board error 3	DB	—	—	○	Common	All axes				
		17.5	Board error 4	DB	—	—	○	Common	All axes				
		17.6	Board error 5	DB	—	—	○	Common	All axes				
		17.7	Board error 7	DB	—	—	○	—	—				
		17.8	Board error 6 *5	EDB	—	—	○	Common	All axes				
		17.9	Board error 8	DB	—	—	○	—	—	—	—	—	—
19	Memory error 3 (Flash-ROM)	19.1	Flash-ROM error 1	DB	—	—	○	Common	All axes	0	0	0	0
		19.2	Flash-ROM error 2	DB	—	—	○	Common	All axes				
		19.3	Flash-ROM error 3	DB	—	—	○	—	—	—	—	—	—
1A	Servo motor combination error	1A.1	Servo motor combination error 1	DB	—	—	○	Each axis	Each axis	0	1	1	0
		1A.2	Servo motor control mode combination error	DB	—	—	○	Each axis	Each axis				
		1A.4	Servo motor combination error 2	DB	—	—	○	Each axis	Each axis				
1B	Converter error	1B.1	Converter unit error	DB	—	—	○	—	—	0	0	1	0
1E	Encoder initial communication error 2	1E.1	Encoder malfunction	DB	—	—	○	Each axis	Each axis	0	1	1	0
		1E.2	Load-side encoder malfunction	DB	—	—	○	Each axis	Each axis				
1F	Encoder initial communication error 3	1F.1	Incompatible encoder	DB	—	—	○	Each axis	Each axis	0	1	1	0
		1F.2	Incompatible load-side encoder	DB	—	—	○	Each axis	Each axis				

Alarm		Detail		Stop method *2*3	Alarm deactivation			Processing system *9	Stop system *9	Alarm code *8			
No.	Name	No.	Name		Alarm reset	CPU reset	Cycling the power			ACD3 (Bit 3)	ACD2 (Bit 2)	ACD1 (Bit 1)	ACD0 (Bit 0)
20	Encoder normal communication error 1	20.1	Encoder normal communication - Receive data error 1	EDB	—	—	○	Each axis	Each axis	0	1	1	0
		20.2	Encoder normal communication - Receive data error 2	EDB	—	—	○	Each axis	Each axis				
		20.3	Encoder normal communication - Receive data error 3	EDB	—	—	○	Each axis	Each axis				
		20.5	Encoder normal communication - Transmission data error 1	EDB	—	—	○	Each axis	Each axis				
		20.6	Encoder normal communication - Transmission data error 2	EDB	—	—	○	Each axis	Each axis				
		20.7	Encoder normal communication - Transmission data error 3	EDB	—	—	○	Each axis	Each axis				
		20.9	Encoder normal communication - Receive data error 4	EDB	—	—	○	Each axis	Each axis				
		20.A	Encoder normal communication - Receive data error 5	EDB	—	—	○	Each axis	Each axis				
21	Encoder normal communication error 2	21.1	Encoder data error 1	EDB	—	—	○	Each axis	Each axis	0	1	1	0
		21.2	Encoder data update error	EDB	—	—	○	Each axis	Each axis				
		21.3	Encoder data waveform error	EDB	—	—	○	Each axis	Each axis				
		21.4	Encoder non-signal error	EDB	—	—	○	Each axis	Each axis				
		21.5	Encoder hardware error 1	EDB	—	—	○	Each axis	Each axis				
		21.6	Encoder hardware error 2	EDB	—	—	○	Each axis	Each axis				
		21.9	Encoder data error 2	EDB	—	—	○	Each axis	Each axis				
24	Main circuit error	24.1	Ground fault detected by hardware detection circuit	DB	—	—	○	Each axis	All axes	1	1	0	0
		24.2	Ground fault detected by software detection function	DB	○	○	○	Each axis	All axes				

Alarm		Detail		Stop method *2*3	Alarm deactivation			Processing system *9	Stop system *9	Alarm code *8			
No.	Name	No.	Name		Alarm reset	CPU reset	Cycling the power			ACD3 (Bit 3)	ACD2 (Bit 2)	ACD1 (Bit 1)	ACD0 (Bit 0)
25	Absolute position erased	25.1	Servo motor encoder - Absolute position erased	DB	—	—	○	Each axis	Each axis	1	1	1	0
		25.2	Scale measurement encoder - Absolute position erased	DB	—	—	○	Each axis	Each axis				
27	Initial magnetic pole detection error	27.1	Initial magnetic pole detection - Abnormal termination	DB	○	—	○	Each axis	Each axis	1	1	1	0
		27.2	Initial magnetic pole detection - Time out error	DB	○	—	○	Each axis	Each axis				
		27.3	Initial magnetic pole detection - Limit switch error	DB	○	—	○	Each axis	Each axis				
		27.4	Initial magnetic pole detection - Estimated error	DB	○	—	○	Each axis	Each axis				
		27.5	Initial magnetic pole detection - Position deviation error	DB	○	—	○	Each axis	Each axis				
		27.6	Initial magnetic pole detection - Speed deviation error	DB	○	—	○	Each axis	Each axis				
		27.7	Initial magnetic pole detection - Current error	DB	○	—	○	Each axis	Each axis				
28	Linear encoder error 2	28.1	Linear encoder - Environment error	EDB	—	—	○	Each axis	Each axis	0	1	1	0
2A	Linear encoder error 1	2A.1	Linear encoder error 1-1	EDB	—	—	○	Each axis	Each axis	0	1	1	0
		2A.2	Linear encoder error 1-2	EDB	—	—	○	Each axis	Each axis				
		2A.3	Linear encoder error 1-3	EDB	—	—	○	Each axis	Each axis				
		2A.4	Linear encoder error 1-4	EDB	—	—	○	Each axis	Each axis				
		2A.5	Linear encoder error 1-5	EDB	—	—	○	Each axis	Each axis				
		2A.6	Linear encoder error 1-6	EDB	—	—	○	Each axis	Each axis				
		2A.7	Linear encoder error 1-7	EDB	—	—	○	Each axis	Each axis				
		2A.8	Linear encoder error 1-8	EDB	—	—	○	Each axis	Each axis				
2B	Encoder counter error	2B.1	Encoder counter error 1	EDB	—	—	○	Each axis	Each axis	1	1	1	0
		2B.2	Encoder counter error 2	EDB	—	—	○	Each axis	Each axis				

Alarm		Detail		Stop method *2*3	Alarm deactivation			Processing system *9	Stop system *9	Alarm code *8			
No.	Name	No.	Name		Alarm reset	CPU reset	Cycling the power			ACD3 (Bit 3)	ACD2 (Bit 2)	ACD1 (Bit 1)	ACD0 (Bit 0)
30	Regenerative error	30.1	Regeneration heat error	DB	○*1	○*1	○*1	Common	All axes	0	0	0	1
		30.2	Regeneration signal error	DB	○*1	○*1	○*1	Common	All axes				
		30.3	Regeneration feedback signal error	DB	○*1	○*1	○*1	Common	All axes				
31	Overspeed	31.1	Abnormal motor speed	SD	○	○	○	Each axis	Each axis	0	1	0	1
32	Overcurrent	32.1	Overcurrent detected at hardware detection circuit (during operation)	DB	—	—	○	Each axis	All axes	0	1	0	0
		32.2	Overcurrent detected at software detection function (during operation)	DB	○	○	○	Each axis	All axes				
		32.3	Overcurrent detected at hardware detection circuit (during a stop)	DB	—	—	○	Each axis	All axes				
		32.4	Overcurrent detected at software detection function (during a stop)	DB	○	○	○	Each axis	All axes				
33	Overvoltage	33.1	Main circuit voltage error	EDB	○	○	○	Common	All axes	1	0	0	1
34	SSCNET receive error 1	34.1	SSCNET receive data error	SD*10	○	○*9	○	Common	All axes	—	—	—	—
		34.2	SSCNET connector connection error	SD*10	○	○	○	Common	All axes	—	—	—	—
		34.3	SSCNET communication data error	SD*10	○	○	○	Each axis	Each axis	—	—	—	—
		34.4	Hardware error signal detection	SD*10	○	○	○	Common	All axes	—	—	—	—
		34.5	SSCNET receive data error (safety observation function)	SD*10	○	○	○	—	—	—	—	—	—
		34.6	SSCNET communication data error (safety observation function)	SD*10	○	○	○	—	—	—	—	—	—
35	Command frequency error	35.1	Command frequency error	SD	○	○	○	Each axis	Each axis	1	1	0	1

Alarm		Detail		Stop method *2*3	Alarm deactivation			Processing system *5	Stop system *9	Alarm code *8			
No.	Name	No.	Name		Alarm reset	CPU reset	Cycling the power			ACD3 (Bit 3)	ACD2 (Bit 2)	ACD1 (Bit 1)	ACD0 (Bit 0)
36	SSCNET receive error 2	36.1	Continuous communication data error	SD*10	○	○	○	Each axis	Each axis	—	—	—	—
		36.2	Continuous communication data error (safety observation function)	SD*10	○	○	○	—	—	—	—	—	—
37	Parameter error	37.1	Parameter setting range error	DB	—	○	○	Each axis	Each axis	1	0	0	0
		37.2	Parameter combination error	DB	—	○	○	Each axis	Each axis				
		37.3	Point table setting error	DB	—	—	○	—	—				
39	Program error	39.1	Program error	DB	—	—	○	—	—	0	0	0	0
		39.2	Instruction argument external error	DB	—	—	○	—	—				
		39.3	Register No. error	DB	—	—	○	—	—				
		39.4	Non-correspondence instruction error	DB	—	—	○	—	—				
3A	Inrush current suppression circuit error	3A.1	Inrush current suppression circuit error	EDB	—	—	○	Common	All axes	0	0	0	0
3D	Parameter setting error for driver communication	3D.1	Parameter combination error for driver communication on slave	DB	—	—	○	—	—	—	—	—	—
		3D.2	Parameter combination error for driver communication on master	DB	—	—	○	—	—	—	—	—	—
3E	Operation mode error	3E.1	Operation mode error	DB	—	○	○	Each axis	Each axis	—	—	—	—
		3E.6	Operation mode switch error	DB	—	—	○	—	—	1	0	0	0
		3E.8	MR-D30 combination error	DB	—	○	○	—	—	—	—	—	—

Alarm		Detail		Stop method *2*3	Alarm deactivation			Processing system *9	Stop system *9	Alarm code *8			
No.	Name	No.	Name		Alarm reset	CPU reset	Cycling the power			ACD3 (Bit 3)	ACD2 (Bit 2)	ACD1 (Bit 1)	ACD0 (Bit 0)
42	Servo control error (for linear servo motor and direct drive motor)	42.1	Servo control error by position deviation	EDB	*4	*4	○	Each axis	Each axis	0	1	1	0
		42.2	Servo control error by speed deviation	EDB	*4	*4	○	Each axis	Each axis				
		42.3	Servo control error by torque/ thrust deviation	EDB	*4	*4	○	Each axis	Each axis				
	Fully closed loop control error (for fully closed loop control)	42.8	Fully closed loop control error by position deviation	EDB	*4	*4	○	Each axis	Each axis				
		42.9	Fully closed loop control error by speed deviation	EDB	*4	*4	○	Each axis	Each axis				
		42.A	Fully closed loop control error by position deviation during command stop	EDB	*4	*4	○	Each axis	Each axis				
45	Main circuit device overheat	45.1	Main circuit device overheat error 1	SD	○*1	○*1	○*1	Common	All axes	0	0	1	1
		45.2	Main circuit device overheat error 2	SD	○*1	○*1	○*1	Common	All axes				
46	Servo motor overheat	46.1	Abnormal temperature of servo motor 1	SD	○*1	○*1	○*1	Each axis	Each axis	0	0	1	1
		46.2	Abnormal temperature of servo motor 2	SD	○*1	○*1	○*1	Each axis	Each axis				
		46.3	Thermistor disconnected error	SD	○*1	○*1	○*1	Each axis	Each axis				
		46.4	Thermistor circuit error	SD	○*1	○*1	○*1	Each axis	Each axis				
		46.5	Abnormal temperature of servo motor 3	DB	○*1	○*1	○*1	Each axis	Each axis				
		46.6	Abnormal temperature of servo motor 4	DB	○*1	○*1	○*1	Each axis	Each axis				
47	Cooling fan error	47.1	Cooling fan stop error	SD	—	—	○	Common	All axes	0	0	1	1
		47.2	Cooling fan speed reduction error	SD	—	—	○	Common	All axes				

Alarm		Detail		Stop method *2*3	Alarm deactivation			Processing system *9	Stop system *9	Alarm code *8			
No.	Name	No.	Name		Alarm reset	CPU reset	Cycling the power			ACD3 (Bit 3)	ACD2 (Bit 2)	ACD1 (Bit 1)	ACD0 (Bit 0)
50	Overload 1	50.1	Thermal overload error 1 during operation	SD	○*1	○*1	○*1	Each axis	Each axis	0	0	1	1
		50.2	Thermal overload error 2 during operation	SD	○*1	○*1	○*1	Each axis	Each axis				
		50.3	Thermal overload error 4 during operation	SD	○*1	○*1	○*1	Each axis	Each axis				
		50.4	Thermal overload error 1 during a stop	SD	○*1	○*1	○*1	Each axis	Each axis				
		50.5	Thermal overload error 2 during a stop	SD	○*1	○*1	○*1	Each axis	Each axis				
		50.6	Thermal overload error 4 during a stop	SD	○*1	○*1	○*1	Each axis	Each axis				
51	Overload 2	51.1	Thermal overload error 3 during operation	DB	○*1	○*1	○*1	Each axis	Each axis	0	0	1	1
		51.2	Thermal overload error 3 during a stop	DB	○*1	○*1	○*1	Each axis	Each axis				
52	Error excessive	52.1	Excess droop pulse 1	SD	○	○	○	Each axis	Each axis	0	1	0	1
		52.3	Excess droop pulse 2	SD	○	○	○	Each axis	Each axis				
		52.4	Error excessive during 0 torque limit	SD	○	○	○	Each axis	Each axis				
		52.5	Excess droop pulse 3	EDB	○	○	○	Each axis	Each axis				
54	Oscillation detection	54.1	Oscillation detection error	EDB	○	○	○	Each axis	Each axis	0	0	1	1
56	Forced stop error	56.2	Over speed during forced stop	EDB	○	○	○	Each axis	Each axis	0	1	1	0
		56.3	Estimated distance over during forced stop	EDB	○	○	○	Each axis	Each axis				
		56.4	Forced stop start error	EDB	○	○	○	Each axis	Each axis				
61	Operation error	61.1	Point table setting range error	DB	○	—	○	—	—	0	1	0	1
63	STO timing error	63.1	STO1 off	DB	○	○	○	Common	All axes	0	1	1	0
		63.2	STO2 off	DB	○	○	○	Common	All axes				
		63.5	STO by functional safety unit	DB	○	○	○	—	—				
64	Functional safety unit setting error	64.1	STO input error	DB	—	—	○	—	—	1	0	0	0
		64.2	Compatibility mode setting error	DB	—	—	○	—	—				
		64.3	Operation mode setting error	DB	—	—	○	—	—				

Alarm		Detail		Stop method *2*3	Alarm deactivation			Processing system *9	Stop system *9	Alarm code *8			
No.	Name	No.	Name		Alarm reset	CPU reset	Cycling the power			ACD3 (Bit 3)	ACD2 (Bit 2)	ACD1 (Bit 1)	ACD0 (Bit 0)
65	Functional safety unit connection error	65.1	Functional safety unit communication error 1	SD	—	—	○	—	—	0	0	0	0
		65.2	Functional safety unit communication error 2	SD	—	—	○	—	—				
		65.3	Functional safety unit communication error 3	SD	—	—	○	—	—				
		65.4	Functional safety unit communication error 4	SD	—	—	○	—	—				
		65.5	Functional safety unit communication error 5	SD	—	—	○	—	—				
		65.6	Functional safety unit communication error 6	SD	—	—	○	—	—				
		65.7	Functional safety unit communication error 7	SD	—	—	○	—	—				
		65.8	Functional safety unit shut-off signal error 1	DB	—	—	○	—	—				
		65.9	Functional safety unit shut-off signal error 2	DB	—	—	○	—	—				

Alarm		Detail		Stop method *2*3	Alarm deactivation			Processing system *5	Stop system *5	Alarm code *8			
No.	Name	No.	Name		Alarm reset	CPU reset	Cycling the power			ACD3 (Bit 3)	ACD2 (Bit 2)	ACD1 (Bit 1)	ACD0 (Bit 0)
66	Encoder initial communication error (safety observation function)	66.1	Encoder initial communication - Receive data error 1 (safety observation function)	DB	—	—	○	—	—	0	1	1	0
		66.2	Encoder initial communication - Receive data error 2 (safety observation function)	DB	—	—	○	—	—				
		66.3	Encoder initial communication - Receive data error 3 (safety observation function)	DB	—	—	○	—	—				
		66.7	Encoder initial communication - Transmission data error 1 (safety observation function)	DB	—	—	○	—	—				
		66.9	Encoder initial communication - Process error 1 (safety observation function)	DB	—	—	○	—	—				
67	Encoder normal communication error 1 (safety observation function)	67.1	Encoder normal communication - Receive data error 1 (safety observation function)	DB	—	—	○	—	—	0	1	1	0
		67.2	Encoder normal communication - Receive data error 2 (safety observation function)	DB	—	—	○	—	—				
		67.3	Encoder normal communication - Receive data error 3 (safety observation function)	DB	—	—	○	—	—				
		67.4	Encoder normal communication - Receive data error 4 (safety observation function)	DB	—	—	○	—	—				
		67.7	Encoder normal communication - Transmission data error 1 (safety observation function)	DB	—	—	○	—	—				
68	STO diagnosis error	68.1	Mismatched STO signal error	DB	—	—	○	Common	Common	0	0	0	0

Alarm		Detail		Stop method *2*3	Alarm deactivation			Processing system *9	Stop system *9	Alarm code *8			
No.	Name	No.	Name		Alarm reset	CPU reset	Cycling the power			ACD3 (Bit 3)	ACD2 (Bit 2)	ACD1 (Bit 1)	ACD0 (Bit 0)
69	Command error	69.1	Forward rotation-side software limit detection - Command excess error	SD	○	○	○	—	—	—	—	—	—
		69.2	Reverse rotation-side software limit detection - Command excess error	SD	○	○	○	—	—	—	—	—	—
		69.3	Forward rotation stroke end detection - Command excess error	SD	○	○	○	—	—	—	—	—	—
		69.4	Reverse rotation stroke end detection - Command excess error	SD	○	○	○	—	—	—	—	—	—
		69.5	Upper stroke limit detection - Command excess error	SD	○	○	○	—	—	—	—	—	—
		69.6	Lower stroke limit detection - Command excess error	SD	○	○	○	—	—	—	—	—	—
70	Load-side encoder initial communication error 1	70.1	Load-side encoder initial communication - Receive data error 1	DB	—	—	○	Each axis	Each axis	0	1	1	0
		70.2	Load-side encoder initial communication - Receive data error 2	DB	—	—	○	Each axis	Each axis				
		70.3	Load-side encoder initial communication - Receive data error 3	DB	—	—	○	Each axis	Each axis				
		70.4	Load-side encoder initial communication - Encoder malfunction *6	DB	—	—	○	Each axis	Each axis				
		70.5	Load-side encoder initial communication - Transmission data error 1	DB	—	—	○	Each axis	Each axis				
		70.6	Load-side encoder initial communication - Transmission data error 2	DB	—	—	○	Each axis	Each axis				

Alarm		Detail		Stop method *2*5	Alarm deactivation			Processing system *8	Stop system *9	Alarm code *8			
No.	Name	No.	Name		Alarm reset	CPU reset	Cycling the power			ACD3 (Bit 3)	ACD2 (Bit 2)	ACD1 (Bit 1)	ACD0 (Bit 0)
70	Load-side encoder initial communication error 1	70.7	Load-side encoder initial communication - Transmission data error 3	DB	—	—	○	Each axis	Each axis	0	1	1	0
		70.8	Load-side encoder initial communication - Incompatible encoder*6	DB	—	—	○	Each axis	Each axis				
		70.A	Load-side encoder initial communication - Process error 1	DB	—	—	○	Each axis	Each axis				
		70.B	Load-side encoder initial communication - Process error 2	DB	—	—	○	Each axis	Each axis				
		70.C	Load-side encoder initial communication - Process error 3	DB	—	—	○	Each axis	Each axis				
		70.D	Load-side encoder initial communication - Process error 4	DB	—	—	○	Each axis	Each axis				
		70.E	Load-side encoder initial communication - Process error 5	DB	—	—	○	Each axis	Each axis				
		70.F	Load-side encoder initial communication - Process error 6	DB	—	—	○	Each axis	Each axis				
71	Load-side encoder normal communication error 1	71.1	Load-side encoder normal communication - Receive data error 1	EDB	—	—	○	Each axis	Each axis	0	1	1	0
		71.2	Load-side encoder normal communication - Receive data error 2	EDB	—	—	○	Each axis	Each axis				
		71.3	Load-side encoder normal communication - Receive data error 3	EDB	—	—	○	Each axis	Each axis				
		71.5	Load-side encoder normal communication - Transmission data error 1	EDB	—	—	○	Each axis	Each axis				

Alarm		Detail		Stop method *2*3	Alarm deactivation			Processing system *9	Stop system *9	Alarm code *8			
No.	Name	No.	Name		Alarm reset	CPU reset	Cycling the power			ACD3 (Bit 3)	ACD2 (Bit 2)	ACD1 (Bit 1)	ACD0 (Bit 0)
71	Load-side encoder normal communication error 1	71.6	Load-side encoder normal communication - Transmission data error 2	EDB	—	—	○	Each axis	Each axis	0	1	1	0
		71.7	Load-side encoder normal communication - Transmission data error 3	EDB	—	—	○	Each axis	Each axis				
		71.9	Load-side encoder normal communication - Receive data error 4	EDB	—	—	○	Each axis	Each axis				
		71.A	Load-side encoder normal communication - Receive data error 5	EDB	—	—	○	Each axis	Each axis				
72	Load-side encoder normal communication error 2	72.1	Load-side encoder data error 1	EDB	—	—	○	Each axis	Each axis	0	1	1	0
		72.2	Load-side encoder data update error	EDB	—	—	○	Each axis	Each axis				
		72.3	Load-side encoder data waveform error	EDB	—	—	○	Each axis	Each axis				
		72.4	Load-side encoder non-signal error	EDB	—	—	○	Each axis	Each axis				
		72.5	Load-side encoder hardware error 1	EDB	—	—	○	Each axis	Each axis				
		72.6	Load-side encoder hardware error 2	EDB	—	—	○	Each axis	Each axis				
		72.9	Load-side encoder data error 2	EDB	—	—	○	Each axis	Each axis				
74	Option card error 1	74.1	Option card error 1	DB	—	—	○	—	—	—	—	—	—
		74.2	Option card error 2	DB	—	—	○	—	—	—	—	—	—
		74.3	Option card error 3	DB	—	—	○	—	—	—	—	—	—
		74.4	Option card error 4	DB	—	—	○	—	—	—	—	—	—
		74.5	Option card error 5	DB	—	—	○	—	—	—	—	—	—
75	Option card error 2	75.3	Option card connection error	EDB	—	—	○	—	—	—	—	—	—
		75.4	Option card disconnected	DB	—	—	○	—	—	—	—	—	—

Alarm		Detail		Stop method *2*3	Alarm deactivation			Processing system *9	Stop system *9	Alarm code *8			
No.	Name	No.	Name		Alarm reset	CPU reset	Cycling the power			ACD3 (Bit 3)	ACD2 (Bit 2)	ACD1 (Bit 1)	ACD0 (Bit 0)
79	Functional safety unit diagnosis error	79.1	Functional safety unit power voltage error	DB	○*7	—	○	—	—	1	1	1	1
		79.2	Functional safety unit internal error	DB	—	—	○	—	—				
		79.3	Abnormal temperature of functional safety unit	SD	○*7	—	○	—	—				
		79.4	Servo amplifier error	SD	—	—	○	—	—				
		79.5	Input device error	SD	—	—	○	—	—				
		79.6	Output device error	SD	—	—	○	—	—				
		79.7	Mismatched input signal error	SD	—	—	○	—	—				
		79.8	Position feedback fixing error	DB	—	—	○	—	—				
7A	Parameter setting error (safety observation function)	7A.1	Parameter verification error (safety observation function)	DB	—	—	○	—	—	1	0	0	0
		7A.2	Parameter setting range error (safety observation function)	DB	—	—	○	—	—				
		7A.3	Parameter combination error (safety observation function)	DB	—	—	○	—	—				
		7A.4	Functional safety unit combination error (safety observation function)	DB	—	—	○	—	—				

Alarm		Detail		Stop method *2*3	Alarm deactivation			Processing system *9	Stop system *9	Alarm code *8			
No.	Name	No.	Name		Alarm reset	CPU reset	Cycling the power			ACD3 (Bit 3)	ACD2 (Bit 2)	ACD1 (Bit 1)	ACD0 (Bit 0)
7B	Encoder diagnosis error (safety observation function)	7B.1	Encoder diagnosis error 1 (safety observation function)	DB	—	—	○	—	—	0	1	1	0
		7B.2	Encoder diagnosis error 2 (safety observation function)	DB	—	—	○	—	—				
		7B.3	Encoder diagnosis error 3 (safety observation function)	DB	—	—	○	—	—				
		7B.4	Encoder diagnosis error 4 (safety observation function)	DB	—	—	○	—	—				
7C	Functional safety unit communication diagnosis error (safety observation function)	7C.1	Functional safety unit communication setting error (safety observation function)	SD	○*7	○	○	—	—	0	0	0	0
		7C.2	Functional safety unit communication data error (safety observation function)	SD	○*7	○	○	—	—				
7D	Safety observation error	7D.1	Stop observation error	DB	○*5	—	○	—	—	1	1	1	1
		7D.2	Speed observation error	DB	○*7	—	○	—	—				
82	Master-slave operation error 1	82.1	Master-slave operation error 1	EDB	○	○	○	—	—	—	—	—	—
84	Network module initialization error	84.1	Network module undetected error	DB	—	—	○	—	—	—	—	—	—
		84.2	Network module initialization error 1	DB	—	—	○	—	—	—	—	—	—
		84.3	Network module initialization error 2	DB	—	—	○	—	—	—	—	—	—
85	Network module error	85.1	Network module error 1	SD	—	—	○	—	—	—	—	—	—
		85.2	Network module error 2	SD	—	—	○	—	—	—	—	—	—
		85.3	Network module error 3	SD	—	—	○	—	—	—	—	—	—

Alarm		Detail		Stop method *2*3	Alarm deactivation			Processing system *9	Stop system *9	Alarm code *8			
No.	Name	No.	Name		Alarm reset	CPU reset	Cycling the power			ACD3 (Bit 3)	ACD2 (Bit 2)	ACD1 (Bit 1)	ACD0 (Bit 0)
86	Network communication error	86.1	Network communication error 1	SD	○	—	○	—	—	—	—	—	—
		86.2	Network communication error 2	SD	○	—	○	—	—	—	—	—	—
		86.3	Network communication error 3	SD	○	—	○	—	—	—	—	—	—
		86.4	Network communication error 4	SD	○	—	○	—	—	—	—	—	—
8A	USB communication time-out error/ serial communication time-out error/ Modbus RTU communication time-out error	8A.1	USB communication time-out error/ serial communication time-out error	SD	○	○	○	Common	All axes	0	0	0	0
		8A.2	Modbus RTU communication time-out error	SD	○	○	○	—	—				
8D	CC-Link IE communication error	8D.1	CC-Link IE communication error 1	SD	○	—	○	—	—	—	—	—	—
		8D.2	CC-Link IE communication error 2	SD	○	—	○	—	—	—	—	—	—
		8D.3	Master station setting error 1	DB	○	—	○	—	—	—	—	—	—
		8D.5	Master station setting error 2	DB	—	—	○	—	—	—	—	—	—
		8D.6	CC-Link IE communication error 3	SD	○	—	○	—	—	—	—	—	—
		8D.7	CC-Link IE communication error 4	SD	○	—	○	—	—	—	—	—	—
		8D.8	CC-Link IE communication error 5	SD	○	—	○	—	—	—	—	—	—
		8D.9	Synchronization error 1	SD	—	—	○	—	—	—	—	—	—
		8D.A	Synchronization error 2	SD	—	—	○	—	—	—	—	—	—
8E	USB communication error/serial communication error/Modbus RTU communication error	8E.1	USB communication receive error/ serial communication receive error	SD	○	○	○	Common	All axes	0	0	0	0
		8E.2	USB communication checksum error/ serial communication checksum error	SD	○	○	○	Common	All axes				
		8E.3	USB communication character error/ serial communication character error	SD	○	○	○	Common	All axes				

Alarm		Detail		Stop method *2*3	Alarm deactivation			Processing system *9	Stop system *9	Alarm code *8			
No.	Name	No.	Name		Alarm reset	CPU reset	Cycling the power			ACD3 (Bit 3)	ACD2 (Bit 2)	ACD1 (Bit 1)	ACD0 (Bit 0)
8E	USB communication error/serial communication error/Modbus RTU communication error	8E.4	USB communication command error/ serial communication command error	SD	○	○	○	Common	All axes	0	0	0	0
		8E.5	USB communication data number error/serial communication data number error	SD	○	○	○	Common	All axes				
		8E.6	Modbus RTU communication receive error	SD	○	○	○	—	—				
		8E.7	Modbus RTU communication message frame error	SD	○	○	○	—	—				
		8E.8	Modbus RTU communication CRC error	SD	○	○	○	—	—				
888 88	Watchdog	8888 _	Watchdog	DB	—	—	○	Common	All axes	—	—	—	—

*1 After resolving the source of trouble, cool the equipment for approximately 30 minutes.

*2 The following shows three stop methods of DB, EDB, and SD.
DB: Stops with dynamic brake. (Coasts for the servo amplifier without dynamic brake.)
Coasts for MR-J4-03A6(-RJ) and MR-J4W2-0303B6. Note that EDB is applied when an alarm below occurs:
[AL. 30.1], [AL. 32.2], [AL. 32.4], [AL. 51.1], [AL. 51.2], [AL. 888]
SD: Forced stop deceleration
EDB: Electronic dynamic brake stop (available with specified servo motors)
Refer to the following table for the specified servo motors. The stop method for other than the specified servo motors will be DB.

Series	Servo motor
HG-KR	HG-KR053/HG-KR13/HG-KR23/HG-KR43
HG-MR	HG-MR053/HG-MR13/HG-MR23/HG-MR43
HG-SR	HG-SR51/HG-SR52
HG-AK	HG-AK0136/HG-AK0236/HG-AK0336

*3 This is applicable when [Pr. PA04] is set to the initial value. The stop system of SD can be changed to DB using [Pr. PA04].

*4 The alarm can be canceled by setting as follows:
For the fully closed loop control: set [Pr. PE03] to "1 _ _ _".
When a linear servo motor or direct drive motor is used: set [Pr. PL04] to "1 _ _ _".

*5 In some controller communication status, the alarm factor may not be removed.

*6 This alarm will occur only in the J3 compatibility mode.

*7 Reset this while all the safety observation functions are stopped.

*8 Alarm codes are outputted only from MR-J4-_A_(-RJ)/MR-J4-DU_A_(-RJ). Refer to the following for details.
☞ Page 6 Explanation for the lists

*9 The processing and stop systems are applicable only for the multi-axis servo amplifiers (MR-J4W_-_B_). Refer to the following for details.
☞ Page 6 Explanation for the lists

*10 In the parallel drive system, the stop method is DB.

1.3 Warning list

Warning		Detail		Stop method *2*3	Processing system *5	Stop system *6
No.	Name	No.	Name			
90	Home position return incomplete warning	90.1	Home position return incomplete	—	—	—
		90.2	Home position return abnormal termination	—	—	—
		90.5	Z-phase unpassed	—	—	—
91	Servo amplifier overheat warning*1	91.1	Main circuit device overheat warning	—	Common	—
92	Battery cable disconnection warning	92.1	Encoder battery cable disconnection warning	—	Each axis	—
		92.3	Battery degradation	—	Each axis	—
93	ABS data transfer warning	93.1	ABS data transfer requirement warning during magnetic pole detection	—	—	—
95	STO warning	95.1	STO1 off detection	DB	Common	All axes
		95.2	STO2 off detection	DB	Common	All axes
		95.3	STO warning 1 (safety observation function)	DB	—	—
		95.4	STO warning 2 (safety observation function)	DB	—	—
		95.5	STO warning 3 (safety observation function)	DB	—	—
96	Home position setting warning	96.1	In-position warning at home positioning	—	Each axis	—
		96.2	Command input warning at home positioning	—	Each axis	—
		96.3	Servo off warning at home positioning	—	—	—
		96.4	Home positioning warning during magnetic pole detection	—	—	—
97	Positioning specification warning	97.1	Program operation disabled warning	—	—	—
		97.2	Next station position warning	—	—	—
98	Software limit warning	98.1	Forward rotation-side software stroke limit reached	—	—	—
		98.2	Reverse rotation-side software stroke limit reached	—	—	—
99	Stroke limit warning	99.1	Forward rotation stroke end off	*4*7	—	—
		99.2	Reverse rotation stroke end off	*4*7	—	—
		99.4	Upper stroke limit off	*7	Each axis	—
		99.5	Lower stroke limit off	*7	Each axis	—
9A	Optional unit input data error warning	9A.1	Optional unit input data sign error	—	—	—
		9A.2	Optional unit BCD input data error	—	—	—
9B	Error excessive warning	9B.1	Excess droop pulse 1 warning	—	Each axis	—
		9B.3	Excess droop pulse 2 warning	—	Each axis	—
		9B.4	Error excessive warning during 0 torque limit	—	Each axis	—
9C	Converter error	9C.1	Converter unit error	—	—	—
9D	CC-Link IE warning 1	9D.1	Station number switch change warning	—	—	—
		9D.2	Master station setting warning	—	—	—
		9D.3	Overlapping station number warning	—	—	—
		9D.4	Mismatched station number warning	—	—	—
9E	CC-Link IE warning 2	9E.1	CC-Link IE communication warning	—	—	—
9F	Battery warning	9F.1	Low battery	—	Each axis	—
		9F.2	Battery degradation warning	—	Each axis	—
E0	Excessive regeneration warning	E0.1	Excessive regeneration warning	—	Common	—

Warning		Detail		Stop method *2*3	Processing system *5	Stop system *5
No.	Name	No.	Name			
E1	Overload warning 1	E1.1	Thermal overload warning 1 during operation	—	Each axis	—
		E1.2	Thermal overload warning 2 during operation	—	Each axis	—
		E1.3	Thermal overload warning 3 during operation	—	Each axis	—
		E1.4	Thermal overload warning 4 during operation	—	Each axis	—
		E1.5	Thermal overload error 1 during a stop	—	Each axis	—
		E1.6	Thermal overload error 2 during a stop	—	Each axis	—
		E1.7	Thermal overload error 3 during a stop	—	Each axis	—
		E1.8	Thermal overload error 4 during a stop	—	Each axis	—
E2	Servo motor overheat warning	E2.1	Servo motor temperature warning	—	Each axis	—
E3	Absolute position counter warning	E3.1	Multi-revolution counter travel distance excess warning	—	—	—
		E3.2	Absolute position counter warning	—	Each axis	—
		E3.4	Absolute positioning counter EEP-ROM writing frequency warning	—	—	—
		E3.5	Encoder absolute positioning counter warning	—	Each axis	—
E4	Parameter warning	E4.1	Parameter setting range error warning	—	Each axis	—
E5	ABS time-out warning	E5.1	Time-out during ABS data transfer	—	—	—
		E5.2	ABSM off during ABS data transfer	—	—	—
		E5.3	SON off during ABS data transfer	—	—	—
E6	Servo forced stop warning	E6.1	Forced stop warning	SD	Common	All axes
		E6.2	SS1 forced stop warning 1 (safety observation function)	SD	—	—
		E6.3	SS1 forced stop warning 2 (safety observation function)	SD	—	—
E7	Controller forced stop warning	E7.1	Controller forced stop input warning	SD	Common	All axes
E8	Cooling fan speed reduction warning	E8.1	Decreased cooling fan speed warning	—	Common	—
		E8.2	Cooling fan stop	—	Common	—
E9	Main circuit off warning	E9.1	Servo-on signal on during main circuit off	DB	Common	All axes
		E9.2	Bus voltage drop during low speed operation	DB	Common	All axes
		E9.3	Ready-on signal on during main circuit off	DB	Common	All axes
		E9.4	Converter unit forced stop	DB	—	—
EA	ABS servo-on warning	EA.1	ABS servo-on warning	—	—	—
EB	The other axis error warning	EB.1	The other axis error warning	DB	Each axis	*6
EC	Overload warning 2	EC.1	Overload warning 2	—	Each axis	—
ED	Output watt excess warning	ED.1	Output watt excess warning	—	Each axis	—
F0	Tough drive warning	F0.1	Instantaneous power failure tough drive warning	—	Each axis	—
		F0.3	Vibration tough drive warning	—	Each axis	—
F2	Drive recorder - Miswriting warning	F2.1	Drive recorder - Area writing time-out warning	—	Common	—
		F2.2	Drive recorder - Data miswriting warning	—	Common	—
F3	Oscillation detection warning	F3.1	Oscillation detection warning	—	Each axis	—
F4	Positioning warning	F4.4	Target position setting range error warning	—	—	—
		F4.6	Acceleration time constant setting range error warning	—	—	—
		F4.7	Deceleration time constant setting range error warning	—	—	—
		F4.9	Home position return type error warning	—	—	—

Warning		Detail		Stop method *2*3	Processing system *5	Stop system *5
No.	Name	No.	Name			
F5	Simple cam function - Cam data miswriting warning	F5.1	Cam data - Area writing time-out warning	—	—	—
		F5.2	Cam data - Area miswriting warning	—	—	—
		F5.3	Cam data checksum error	—	—	—
F6	Simple cam function - Cam control warning	F6.1	Cam axis one cycle current value restoration failed	—	—	—
		F6.2	Cam axis feed current value restoration failed	—	—	—
		F6.3	Cam unregistered error	—	—	—
		F6.4	Cam control data setting range error	—	—	—
		F6.5	Cam No. external error	—	—	—
		F6.6	Cam control inactive	—	—	—
F7	Machine diagnosis warning	F7.1	Vibration failure prediction warning	—	Each axis	—
		F7.2	Friction failure prediction warning	—	Each axis	—
		F7.3	Total travel distance failure prediction warning	—	Each axis	—

*1 After resolving the source of trouble, cool the equipment for approximately 30 minutes.

*2 The following shows two stop methods of DB and SD.
DB: Stops with dynamic brake. (Coasts for the servo amplifier without dynamic brake.)
Coasts for MR-J4-03A6(-RJ) and MR-J4W2-0303B6.
SD: Forced stop deceleration

*3 This is applicable when [Pr. PA04] is set to the initial value. The stop system of SD can be changed to DB using [Pr. PA04].

*4 For MR-J4-_A_ servo amplifier, quick stop or slow stop can be selected using [Pr. PD30].

*5 The processing and stop systems are applicable only for the multi-axis servo amplifiers (MR-J4W_-_B_). Refer to the following for details.
☞ Page 6 Explanation for the lists

*6 As the initial value, it is applicable only for [AL. 24] and [AL. 32]. All-axis stop can be selected using [Pr. PF02].

*7 For MR-J4-_GF_ servo amplifier, quick stop or slow stop can be selected using [Pr. PD12]. (I/O mode only)

1.4 Remedies for alarms

⚠CAUTION

- When any alarm has occurred, eliminate its cause, ensure safety, and deactivate the alarm before restarting operation. Otherwise, it may cause injury.
- If [AL. 25 Absolute position erased] occurs, always make home position setting again. Otherwise, it may cause an unexpected operation.
- As soon as an alarm occurs, make the Servo-off status and interrupt the main circuit power.

Point

When any of the following alarms has occurred, do not cycle the power repeatedly to restart. Doing so will cause a malfunction of the servo amplifier and servo motor. Remove its cause and allow about 30 minutes for cooling before resuming the operation.

- [AL. 30 Regenerative error]
- [AL. 45 Main circuit device overheat]
- [AL. 46 Servo motor overheat]
- [AL. 50 Overload 1]
- [AL. 51 Overload 2]

[AL. 37 Parameter error] is not recorded in the alarm history.

Remove the cause of the alarm in accordance with this section. Use MR Configurator2 to refer to the cause of alarm occurrence.

Alarm No.: 10		Name: Undervoltage					
Alarm content		· The voltage of the control circuit power supply has dropped. · The voltage of the main circuit power supply has dropped.					
Detail No.	Detail name	Cause		Check method	Check result	Action	Target
10.1	Voltage drop in the control circuit power	(1)	The control circuit power supply connection is incorrect.	Check the connection of the control circuit power supply.	It has a failure.	Connect it correctly.	[A] [B] [WB] [RJ010] [GF]
					It has no failure.	Check (2).	
		(2)	The voltage of the control circuit power supply is low.	Check if the voltage of the control circuit power supply is lower than prescribed value. 200 V class: 160 V AC 400 V class: 280 V AC 100 V class: 83 V AC 24 V DC input: 17 V DC	The voltage is the prescribed value or lower.	Review the voltage of the control circuit power supply.	
					The voltage is higher than the prescribed value.	Check (3).	
		(3)	The power was cycled before the internal control circuit power supply stopped.	Check the power-on method if it has a problem.	It has a problem.	Cycle the power after the seven-segment LED of the servo amplifier is turned off.	
					It has no problem.	Check (4).	
		(4)	An instantaneous power failure has occurred for longer time than the specified time. The time will be 60 ms when [Pr. PA20] is "_ 0 _ _". The time will be the value set in [Pr. PF25] when [Pr. PA20] is "_ 1 _ _". The time will be 60 ms when [Pr. PX25] is "_ 0 _ _" and the J3 extension function is used. The time will be the value set in [Pr. PX26] when [Pr. PX25] is "_ 1 _ _". An instantaneous power failure of 15 ms or longer has occurred on MR-J4-03A6(-RJ) or MR-J4W2-0303B6.	Check if the power has a problem.	It has a problem.	Review the power.	
					It has no problem.	Check (5).	
		(5)	When a power regeneration converter is used, the voltage of the control circuit power supply is distorted.	Check if the power has a problem. When power supply impedance is high, power supply voltage will be distorted due to current at power regeneration, and it may be recognized as undervoltage.	It has a problem.	Review the setting of "[AL. 10 Undervoltage] detection method selection" with the following parameters. [A]: [Pr. PC27] [B] [WB] [RJ010] [GF]: [Pr. PC20] Review the power.	

Alarm No.: 10		Name: Undervoltage					
Alarm content		· The voltage of the control circuit power supply has dropped. · The voltage of the main circuit power supply has dropped.					
Detail No.	Detail name	Cause		Check method	Check result	Action	Target
10.2	Voltage drop in the main circuit power	(1)	The main circuit power supply wiring was disconnected. For the drive unit, the main circuit power supply wiring of the converter unit was disconnected.	Check the main circuit power supply wiring. Check the main circuit power supply wiring of the converter unit.	It is disconnected.	Connect it correctly.	[A] [B] [WB] [RJ010] [GF]
					It is connected.	Check (2).	
		(2)	The wiring between P3 and P4 was disconnected. For the drive unit, the wiring between P1 and P2 of the converter unit was disconnected.	Check the wiring between P3 and P4. Check the wiring between P1 and P2 of the converter unit.	It is disconnected.	Connect it correctly.	
					It is connected.	Check (3).	
		(3)	For the drive unit, the magnetic contactor control connector of the converter unit was disconnected.	Check the magnetic contactor control connector of the converter unit.	It is disconnected.	Connect it correctly.	
					It has no failure.	Check (4).	
		(4)	For the drive unit, the bus bar between the converter unit and drive unit was disconnected.	Check the bus bar between the converter unit and drive unit.	It is disconnected.	Connect it correctly.	
					It has no failure.	Check (5).	
		(5)	The voltage of the main circuit power supply is low.	Check if the voltage of the main circuit power supply is the prescribed value or lower. 200 V class: 160 V AC 400 V class: 280 V AC 100 V class: 83 V AC 48 V DC setting: 35 V DC 24 V DC setting: 15 V DC	The voltage is the prescribed value or lower.	Increase the voltage of the main circuit power supply.	
					The voltage is higher than the prescribed value.	Check (6).	
		(6)	The alarm has occurred during acceleration.	Check if the bus voltage during acceleration is lower than the prescribed value. 200 V class: 200 V DC 400 V class: 380 V DC 100 V class: 158 V DC 48 V DC setting: 35 V DC 24 V DC setting: 15 V DC	The voltage is lower than the prescribed value.	Increase the acceleration time constant. Or increase the power supply capacity.	
					The voltage is equal to or higher than the prescribed value.	Check (7).	
		(7)	The servo amplifier is malfunctioning.	Check the bus voltage value.	The bus voltage is less than the prescribed value although the voltage of the main circuit power supply is within specifications. 200 V class: 200 V DC 400 V class: 380 V DC 100 V class: 158 V DC 48 V DC setting: 35 V DC 24 V DC setting: 15 V DC	Replace the servo amplifier.	
		(8)	For the drive unit, the converter unit is malfunctioning.	Replace the converter unit, and then check the repeatability.	It is not repeatable.	Replace the converter unit.	

Alarm No.: 11	Name: Switch setting error						
Alarm content	· The setting of the axis selection rotary switch or auxiliary axis number setting switch is incorrect. · The setting of the disabling control axis switch is incorrect. · The setting of the station number selection rotary switch is incorrect.						
Detail No.	Detail name	Cause		Check method	Check result	Action	Target
11.1	Axis number setting error	(1)	The setting of the axis No. is incorrect.	Check the settings of the auxiliary axis number setting switches (SW2-5/ SW2-6) and axis selection rotary switch (SW1).	When both of the auxiliary axis number setting switches are on, check the axis selection rotary switch if "F" is selected for MR-J4W2, ("E" or "F" is selected for MR-J4W3).	Set the axis No. correctly.	[WB]
					Both of the auxiliary axis number setting switches are off.	Replace the servo amplifier.	
	Station number setting error	(2)	The station number is set to a value other than "1" to "120" with the station number selection rotary switch.	Check the settings of the station number selection rotary switches (SW2/ SW3).	The setting of the station number selection rotary switch is set to "0" or "121" or more.	Set the station number correctly.	[GF]
					The station number is set to a value from "1" to "120" with the station number selection rotary switch.	Replace the servo amplifier.	
11.2	Disabling control axis setting error	(1)	The setting of the disabling control axis switch is incorrect.	Check the setting of the disabling control axis switch.	Check if the setting is as follows. 1) Only A-axis is disabled. 2) Only B-axis is disabled. 3) A-axis and B-axis are disabled. 4) A-axis and C-axis are disabled. 5) All axes are disabled.	Set it correctly.	[WB]
					The setting is other than above.	Replace the servo amplifier.	

Alarm No.: 12	Name: Memory error 1 (RAM)						
Alarm content	· A part (RAM) in the servo amplifier is failure.						
Detail No.	Detail name	Cause		Check method	Check result	Action	Target
12.1	RAM error 1	(1)	A part in the servo amplifier is failure.	Disconnect the cables except for the control circuit power supply, and then check the repeatability.	It is repeatable.	Replace the servo amplifier.	[A] [B] [WB] [RJ010] [GF]
					It is not repeatable.	Check (2).	
		(2)	Something near the device caused it.	Check the power supply for noise.	There is a problem in the surrounding.	Take countermeasures against its cause.	
12.2	RAM error 2	Check it with the check method for [AL. 12.1].					
12.3	RAM error 3						
12.4	RAM error 4						
12.5	RAM error 5						
12.6	RAM error 6						

Alarm No.: 13		Name: Clock error					
Alarm content		· A part in the servo amplifier is failure. · A clock error transmitted from the controller occurred. · [RJ010]: MR-J3-T10 came off.					
Detail No.	Detail name	Cause		Check method	Check result	Action	Target
13.1	Clock error 1	(1)	The MR-J3-T10 came off during the CC-Link IE communication.	Check if [AL. 74 Option card error 1] occurred with alarm history.	It is occurring.	Check it with the check method for [AL. 74].	[RJ010]
					It did not occur.	Check (2).	
		(2)	A part in the servo amplifier is failure.	Disconnect the cables except for the control circuit power supply, and then check the repeatability.	It is repeatable.	Replace the servo amplifier.	[A] [B] [WB] [RJ010] [GF]
					It is not repeatable.	Check (3).	
		(3)	A clock error transmitted from the controller occurred.	Check if the alarm occurs when you connect the amplifier to the controller.	It occurs.	Replace the controller.	[B] [WB]
					It does not occur.	Check (4).	
		(4)	The servo amplifier of the next axis is malfunctioning.	Check if the servo amplifier of the next axis is malfunctioning.	It is malfunctioning.	Replace the servo amplifier of the next axis.	
					It is not malfunctioning.	Check (5).	
		(5)	Something near the device caused it.	Check the power supply for noise. Check if the connector is shorted.	There is a problem in the surrounding.	Take countermeasures against its cause.	[A] [B] [WB] [RJ010] [GF]
13.2	Clock error 2	Check it with the check method for [AL. 13.1].					
13.3	Clock error 3						

Alarm No.: 14	Name: Control process error						
Alarm content	The process did not complete within the specified time. [RJ010]: MR-J3-T10 came off. [GF]: A part (communication IC) in the servo amplifier is failure.						
Detail No.	Detail name	Cause		Check method	Check result	Action	Target
14.1	Control process error 1	(1)	The MR-J3-T10 came off during the CC-Link IE communication.	Check if [AL. 74 Option card error 1] occurred with alarm history.	It is occurring.	Check it with the check method for [AL. 74].	[RJ010]
					It did not occur.	Check (2).	
		(2)	The parameter setting is incorrect.	Check if the parameter setting is incorrect.	It is incorrect.	Set it correctly.	[A] [B] [WB] [RJ010] [GF]
					It is correct.	Check (3).	
		(3)	Something near the device caused it.	Check the power supply for noise. Check if the connector is shorted.	There is a problem in the surrounding.	Take countermeasures against its cause.	
					There is no problem in the surrounding.	Check (4).	
		(4)	The servo amplifier is malfunctioning.	Replace the servo amplifier, and then check the repeatability.	It is not repeatable.	Replace the servo amplifier.	
14.2	Control process error 2	(1)	The MR-J3-T10 came off during the CC-Link IE communication.	Check if [AL. 74 Option card error 1] occurred with alarm history.	It is occurring.	Check it with the check method for [AL. 74].	[RJ010]
					It did not occur.	Check (2).	
		(2)	A synchronous signal error transmitted from the controller occurred.	Replace the controller, and then check the repeatability.	It is repeatable.	Replace the servo amplifier.	[B] [WB]
					It is not repeatable.	Check (3).	
		(3)	Adaptive tuning mode or vibration suppression control tuning mode has been executed for multiple axes simultaneously.	Check the setting of [Pr. PB01] or [Pr. PB02]. With the J3 extension function, Check the setting of [Pr. PB01], [Pr. PB02], or [Pr. PX03].	It has been executed for multiple axes simultaneously.	Execute it for each axis.	[WB]
					It has not been executed for multiple axes simultaneously.	Check (4).	
		(4)	The parameter setting is incorrect.	Check if the parameter setting is incorrect.	It is incorrect.	Set it correctly.	[A] [B] [WB] [RJ010] [GF]
					It is correct.	Check (5).	
		(5)	Something near the device caused it.	Check the power supply for noise. Check if the connector is shorted.	There is a problem in the surrounding.	Take countermeasures against its cause.	
					There is no problem in the surrounding.	Check (6).	
		(6)	The servo amplifier is malfunctioning.	Replace the servo amplifier, and then check the repeatability.	It is not repeatable.	Replace the servo amplifier.	
14.3	Control process error 3	Check it with the check method for [AL. 14.1].					
14.4	Control process error 4						
14.5	Control process error 5						
14.6	Control process error 6						
14.7	Control process error 7						
14.8	Control process error 8						
14.9	Control process error 9						
14.A	Control process error 10						

Alarm No.: 14		Name: Control process error						
Alarm content		· The process did not complete within the specified time. · [RJ010]: MR-J3-T10 came off. · [GF]: A part (communication IC) in the servo amplifier is failure.						
Detail No.	Detail name	Cause		Check method	Check result	Action	Target
14.B	Control process error 11	(1)	The MR-J3-T10 came off during the CC-Link IE communication.	Check if [AL. 74 Option card error 1] occurred with alarm history.	It is occurring.	Check it with the check method for [AL. 74].	[RJ010]
					It did not occur.	Check (2).	
		(2)	The parameter setting is incorrect.	Check if the parameter setting is incorrect.	It is incorrect.	Set it correctly.	[A] [B] [WB] [RJ010]
					It is correct.	Check (3).	
		(3)	Something near the device caused it.	Check the power supply for noise. Check if the connector is shorted.	It has a failure.	Take countermeasures against its cause.	[A] [B] [WB] [RJ010] [GF]
					It has no failure.	Check (4).	
		(4)	The servo amplifier is malfunctioning.	Replace the servo amplifier, and then check the repeatability.	It is not repeatable.	Replace the servo amplifier.	
14.C	Control process error 12	Check it with the check method for [AL. 14.B].					
14.D	Control process error 13						

Alarm No.: 15		Name: Memory error 2 (EEP-ROM)					
Alarm content		· A part (EEP-ROM) in the servo amplifier is failure. · [RJ010]: MR-J3-T10 came off.					
Detail No.	Detail name	Cause		Check method	Check result	Action	Target
15.1	EEP-ROM error at power on	(1)	EEP-ROM is malfunctioning at power on.	Disconnect the cables except for the control circuit power supply, and then check the repeatability.	It is repeatable.	Replace the servo amplifier.	[A] [B] [WB] [RJ010] [GF]
					It is not repeatable.	Check (2).	
		(2)	Something near the device caused it.	Check the power supply for noise. Check if the connector is shorted.	There is a problem in the surrounding.	Take countermeasures against its cause.	
					There is no problem in the surrounding.	Check (3).	
		(3)	The number of write times exceeded 100,000.	Check if parameters, point tables, or programs are changed very frequently.	It was changed.	Replace the servo amplifier. Change the process to use parameters, point tables, and programs less frequently after replacement.	
15.2	EEP-ROM error during operation	(1)	The MR-J3-T10 came off during the CC-Link IE communication.	Check if [AL. 74 Option card error 1] occurred with alarm history.	It is occurring.	Check it with the check method for [AL. 74].	[RJ010]
					It did not occur.	Check (2).	
		(2)	EEP-ROM is malfunctioning during normal operation.	Check if the error occurs when you change parameters during normal operation.	It occurs.	Replace the servo amplifier.	[A] [B] [WB] [RJ010] [GF]
					It does not occur.	Check (3).	
		(3)	A write error occurred while adjustment results were processed.	Check if the alarm occurs after an hour from power on.	It takes an hour or more.	Replace the servo amplifier.	
					It takes less than an hour.	Check (4).	
		(4)	Something near the device caused it.	Check the power supply for noise. Check if the connector is shorted.	There is a problem in the surrounding.	Take countermeasures against its cause.	
15.4	Home position information read error	(1)	EEP-ROM is malfunctioning at power on.	Disconnect the cables except for the control circuit power supply, and then check the repeatability.	It is repeatable.	Replace the servo amplifier.	[A] [GF]
					It is not repeatable.	Check (2).	
		(2)	Multiple rotation data saved as a home position and read from EEP-ROM were failure.	Check if the home position was set correctly.	It has a failure.	Make home position setting again.	
					It has no failure.	Check (3).	
		(3)	Something near the device caused it.	Check the power supply for noise. Check if the connector is shorted.	There is a problem in the surrounding.	Take countermeasures against its cause.	
					There is no problem in the surrounding.	Check (4).	
		(4)	The number of write times exceeded 100,000.	Check if parameters has been used very frequently.	It was changed.	Replace the servo amplifier. Change the process to use parameters less frequently after replacement.	

Alarm No.: 16		Name: Encoder initial communication error 1					
Alarm content		An error occurred in the communication between an encoder and servo amplifier.					
Detail No.	Detail name	Cause		Check method	Check result	Action	Target
16.1	Encoder initial communication - Receive data error 1	(1)	An encoder cable is malfunctioning.	Check if the encoder cable is disconnected or shorted.	It has a failure.	Replace or repair the cable.	[A] [B] [WB] [RJ010] [GF]
					It has no failure.	Check (2).	
		(2)	When you use a linear servo motor with an A/B/Z-phase differential output linear encoder, the servo amplifier is not compatible with the linear encoder.	Check if the servo amplifier (MR-J4-_-RJ) is compatible with the A/B/Z-phase differential output linear encoder.	The servo amplifier is not compatible with it.	Use a servo amplifier which is compatible with it.	[A] [B] [GF]
					The servo amplifier is compatible with it.	Check (3).	
		(3)	When you use a linear servo motor with an A/B/Z-phase differential output linear encoder, the connection with the linear encoder is incorrect.	Check if the wiring of the linear encoder is correct. (Check if it is wired to PSEL.)	The wiring is incorrect.	Wire it correctly.	
					The wiring is correct.	Check (4).	
		(4)	The servo amplifier is malfunctioning.	Replace the servo amplifier, and then check the repeatability.	It is not repeatable.	Replace the servo amplifier.	[A] [B] [WB] [RJ010] [GF]
					It is repeatable.	Check (5).	
		(5)	An encoder is malfunctioning.	Replace the servo motor or linear encoder, and then check the repeatability.	It is not repeatable.	Replace the servo motor.	
					It is repeatable.	Check (6).	
		(6)	Something near the device caused it.	Check the noise, ambient temperature, vibration, etc.	There is a problem in the surrounding.	Take countermeasures against its cause.	
16.2	Encoder initial communication - Receive data error 2	Check it with the check method for [AL. 16.1].					

Alarm No.: 16		Name: Encoder initial communication error 1					
Alarm content		· An error occurred in the communication between an encoder and servo amplifier.					
Detail No.	Detail name	Cause		Check method	Check result	Action	Target
16.3	Encoder initial communication - Receive data error 3	(1)	An axis not used is not set as disabled-axis.	Check the setting of the disabling control axis switches (SW2-2/SW2-3/SW2-4).	It is not set as disabled-axis.	Set it as disabled-axis.	[WB]
					It is set as disabled-axis.	Check (2).	
		(2)	An encoder cable was disconnected.	Check if the encoder cable is connected correctly.	It is not connected.	Connect it correctly.	[A] [B] [WB] [RJ010] [GF]
					It is connected.	Check (3).	
		(3)	The parameter setting of communication method is incorrect. [A]: [Pr. PC22] [B] [WB] [RJ010] [GF]: [Pr. PC04]	Check the parameter setting.	The setting is incorrect.	Set it correctly.	
					The setting is correct.	Check (4).	
		(4)	In the parallel drive system, the setting of [Pr. PF40] is incorrect.	Check the parameter setting.	The setting is incorrect.	Set it correctly.	[B]
					The setting is correct.	Check (5).	
		(5)	An encoder cable is malfunctioning.	Check if the encoder cable is disconnected or shorted.	It has a failure.	Replace or repair the cable.	[A] [B] [WB] [RJ010] [GF]
					It has no failure.	Check (6).	
		(6)	When you use a linear servo motor with an A/B/Z-phase differential output linear encoder, the connection with the linear encoder is incorrect.	Check if the wiring of the linear encoder is correct. (Check if it is wired to PSEL.)	The wiring is incorrect.	Wire it correctly.	[A] [B] [GF]
					The wiring is correct.	Check (7).	
		(7)	The voltage of the control circuit power supply has been unstable.	Check the voltage of the control circuit power supply.	An instantaneous power failure is occurring at the control circuit power supply.	Review the power and related parts.	[A] [B] [WB] [RJ010] [GF]
					It has no failure.	Check (8).	
		(8)	The servo amplifier is malfunctioning.	Replace the servo amplifier, and then check the repeatability.	It is not repeatable.	Replace the servo amplifier.	
					It is repeatable.	Check (9).	
		(9)	An encoder is malfunctioning.	Replace the servo motor, and then check the repeatability.	It is not repeatable.	Replace the servo motor.	
					It is repeatable.	Check (10).	
		(10)	Something near the device caused it.	Check the noise, ambient temperature, vibration, etc.	There is a problem in the surrounding.	Take countermeasures against its cause.	
16.4	Encoder initial communication - Encoder malfunction	(1)	An encoder is malfunctioning.	Replace the servo motor, and then check the repeatability.	It is not repeatable.	Replace the servo motor.	[B] [WB]
					It is repeatable.	Check (2).	
		(2)	Something near the device caused it.	Check the noise, ambient temperature, vibration, etc.	There is a problem in the surrounding.	Take countermeasures against its cause.	
16.5	Encoder initial communication - Transmission data error 1	Check it with the check method for [AL. 16.1].					
16.6	Encoder initial communication - Transmission data error 2						
16.7	Encoder initial communication - Transmission data error 3						

Alarm No.: 16		Name: Encoder initial communication error 1					
Alarm content		An error occurred in the communication between an encoder and servo amplifier.					
Detail No.	Detail name	Cause		Check method	Check result	Action	Target
16.8	Encoder initial communication - Incompatible encoder	(1)	A servo motor or linear encoder, which is not compatible with the servo amplifier, was connected.	Check the model of the servo motor/linear encoder.	It is not compatible with the servo amplifier.	Replace it with a compatible one.	[B] [WB]
					It is compatible with the servo amplifier.	Check (2).	
		(2)	The software version of the servo amplifier does not support the servo motor or linear encoder.	Check if the software version supports the servo motor/linear encoder.	It is not compatible.	Replace the servo amplifier to one which software version supports the servo motor/linear encoder.	
					It is compatible.	Check (3).	
		(3)	An encoder is malfunctioning.	Replace the servo motor or linear encoder, and then check the repeatability.	It is not repeatable.	Replace the servo motor or linear encoder.	
					It is repeatable.	Replace the servo amplifier.	
16.A	Encoder initial communication - Process error 1	(1)	The servo amplifier is malfunctioning.	Replace the servo amplifier, and then check the repeatability.	It is not repeatable.	Replace the servo amplifier.	[A] [B] [WB] [RJ010] [GF]
					It is repeatable.	Check (2).	
		(2)	An encoder is malfunctioning.	Replace the servo motor, and then check the repeatability.	It is not repeatable.	Replace the servo motor.	
					It is repeatable.	Check (3).	
		(3)	Something near the device caused it.	Check the noise, ambient temperature, vibration, etc.	There is a problem in the surrounding.	Take countermeasures against its cause.	
16.B	Encoder initial communication - Process error 2	Check it with the check method for [AL. 16.A].					
16.C	Encoder initial communication - Process error 3						
16.D	Encoder initial communication - Process error 4						
16.E	Encoder initial communication - Process error 5						
16.F	Encoder initial communication - Process error 6						

Alarm No.: 17		Name: Board error					
Alarm content		A part in the servo amplifier is malfunctioning.					
Detail No.	Detail name	Cause		Check method	Check result	Action	Target
17.1	Board error 1	(1)	A current detection circuit is malfunctioning.	Check if the alarm occurs during the servo-on status.	It occurs.	Replace the servo amplifier.	[A] [B] [WB] [RJ010] [GF]
					It does not occur.	Check (2).	
		(2)	Something near the device caused it.	Check the noise, ambient temperature, etc.	There is a problem in the surrounding.	Take countermeasures against its cause.	
17.3	Board error 2	Check it with the check method for [AL. 17.1].					

Alarm No.: 17	Name: Board error						
Alarm content	A part in the servo amplifier is malfunctioning.						
Detail No.	Detail name	Cause		Check method	Check result	Action	Target
17.4	Board error 3	(1)	The servo amplifier recognition signal was not read properly.	Disconnect the cables except for the control circuit power supply, and then check the repeatability.	It is repeatable.	Replace the servo amplifier.	[A] [B] [WB] [RJ010] [GF]
					It is not repeatable.	Check (2).	
		(2)	Something near the device caused it.	Check the noise, ambient temperature, etc.	There is a problem in the surrounding.	Take countermeasures against its cause.	
17.5	Board error 4	(1)	The setting value of the axis selection rotary switch (SW1) was not read properly.	Disconnect the cables except for the control circuit power supply, and then check the repeatability.	It is repeatable.	Replace the servo amplifier.	[B] [WB]
					It is not repeatable.	Check (2).	
		(2)	Something near the device caused it.	Check the noise, ambient temperature, etc.	There is a problem in the surrounding.	Take countermeasures against its cause.	
17.6	Board error 5	(1)	The setting value of the control axis setting switch (SW2) was not read properly.	Disconnect the cables except for the control circuit power supply, and then check the repeatability.	It is repeatable.	Replace the servo amplifier.	[B] [WB]
					It is not repeatable.	Check (2).	
		(2)	Something near the device caused it.	Check the noise, ambient temperature, etc.	There is a problem in the surrounding.	Take countermeasures against its cause.	
17.7	Board error 7	Check it with the check method for [AL. 17.4].					
17.8	Board error 6	(1)	Inrush current suppressor circuit is malfunctioning.	Replace the servo amplifier, and then check the repeatability.	It is not repeatable.	Replace the servo amplifier.	[B] [WB]
17.9	Board error 8	(1)	Something near the device caused it.	Check the noise, ambient temperature, etc.	There is a problem in the surrounding.	Take countermeasures against its cause.	[GF]
					There is no problem in the surrounding.	Check (2).	
		(2)	The servo amplifier is malfunctioning.	Replace the servo amplifier, and then check the repeatability.	It is not repeatable.	Replace the servo amplifier.	

Alarm No.: 19	Name: Memory error 3 (Flash-ROM)						
Alarm content	A part (Flash-ROM) in the servo amplifier is failure.						
Detail No.	Detail name	Cause		Check method	Check result	Action	Target
19.1	Flash-ROM error 1	(1)	The Flash-ROM is malfunctioning.	Disconnect the cables except for the control circuit power supply, and then check the repeatability.	It is repeatable.	Replace the servo amplifier.	[A] [B] [WB] [RJ010] [GF]
					It is not repeatable.	Check (2).	
		(2)	Something near the device caused it.	Check the noise, ambient temperature, etc.	There is a problem in the surrounding.	Take countermeasures against its cause.	
19.2	Flash-ROM error 2	Check it with the check method for [AL. 19.1].					
19.3	Flash-ROM error 3						

Alarm No.: 1A		Name: Servo motor combination error					
Alarm content		The combination of servo amplifier and servo motor is incorrect.					
Detail No.	Detail name	Cause		Check method	Check result	Action	Target
1A.1	Servo motor combination error 1	(1)	The servo amplifier and the servo motor was connected incorrectly.	Check the model name of the servo motor and corresponding servo amplifier.	The combination is incorrect.	Use them in the correct combination.	[A] [B] [WB] [RJ010] [GF]
					The combination is correct.	Check (2).	
		(2)	The setting of [Pr. PA01] is not corresponding to the connected servo motor.	Check the [Pr. PA01] setting. Rotary servo motor: "_ _ 0 _" Linear servo motor: "_ _ 4 _" Direct drive motor: "_ _ 6 _"	The combination is incorrect.	Set [Pr. PA01] correctly. When using a linear servo motor, also check (3).	[A] [B] [WB] [GF]
					The combination is correct.	Check (4).	
		(3)	[Pr. PA17] and [Pr. PA18] were not set according to the linear servo motor to be used.	Check if [Pr. PA17] and [Pr. PA18] are set correctly.	It is not set correctly.	Set them correctly according to the linear servo motor to be used.	
		(4)	The software version of the servo amplifier does not support the TM-RG2M/TM-RU2M series direct drive motor.	Check if the software version of the servo amplifier supports the TM-RG2M/TM-RU2M series.	It is C7 or earlier.	Replace the servo amplifier with a one whose software version supports the TM-RG2M/ TM-RU2M series.	
					It is C8 or later.	Check (5).	
		(5)	An encoder is malfunctioning.	Replace the servo motor, and then check the repeatability.	It is not repeatable.	Replace the servo motor.	[A] [B] [WB] [RJ010] [GF]
1A.2	Servo motor control mode combination error	(1)	The setting of [Pr. PA01] is not corresponding to the connected servo motor.	Check the [Pr. PA01] setting. Rotary servo motor: "_ _ 0 _" Linear servo motor: "_ _ 4 _" Direct drive motor: "_ _ 6 _"	The combination is incorrect.	Set [Pr. PA01] correctly.	[A] [B] [WB] [GF]
		(2)	When the fully closed loop control mode is selected, encoders of the servo motor side and the machine side are connected reversely.	Check the connection destination of the encoder.	The connection destination of the encoder is incorrect.	Connect it correctly.	
1A.4	Servo motor combination error 2	(1)	The servo amplifier is malfunctioning.	Replace the servo amplifier, and then check the repeatability.	It is not repeatable.	Replace the servo amplifier.	

Alarm No.: 1B		Name: Converter alarm					
Alarm content		An alarm occurred in the converter unit during the servo-on.					
Detail No.	Detail name	Cause		Check method	Check result	Action	Target
1B.1	Converter unit error	(1)	The protection coordination cable is not correctly connected.	Check the protection coordination cable connection.	It is not connected.	Connect it correctly.	[A] [B]
					It is connected.	Check (2).	
		(2)	An alarm occurred in the converter unit during the servo-on.	Check the alarm of the converter unit, and take the action following the remedies for alarms of the converter unit.			

Alarm No.: 1E		Name: Encoder initial communication error 2					
Alarm content		· An encoder is malfunctioning.					
Detail No.	Detail name	Cause		Check method	Check result	Action	Target
1E.1	Encoder malfunction	(1)	An encoder is malfunctioning.	Replace the servo motor, and then check the repeatability.	It is not repeatable.	Replace the servo motor.	[A] [B] [WB] [RJ010] [GF]
					It is repeatable.	Check (2).	
		(2)	Something near the device caused it.	Check the noise, ambient temperature, vibration, etc.	There is a problem in the surrounding.	Take countermeasures against its cause.	
1E.2	Load-side encoder malfunction	(1)	A load-side encoder is malfunctioning.	Replace the load-side encoder, and then check the repeatability.	It is not repeatable.	Replace the load-side encoder.	[A] [B] [WB] [GF]
					It is repeatable.	Check (2).	
		(2)	Something near the device caused it.	Check the noise, ambient temperature, vibration, etc.	There is a problem in the surrounding.	Take countermeasures against its cause.	

Alarm No.: 1F		Name: Encoder initial communication error 3					
Alarm content		· The connected encoder is not compatible with the servo amplifier.					
Detail No.	Detail name	Cause		Check method	Check result	Action	Target
1F.1	Incompatible encoder	(1)	A servo motor or linear encoder, which is not compatible with the servo amplifier, was connected.	Check the model of the servo motor/linear encoder.	It is not compatible with the servo amplifier.	Replace it with a compatible one.	[A] [B] [WB] [RJ010] [GF]
					It is compatible with the servo amplifier.	Check (2).	
		(2)	The software version of the servo amplifier does not support the servo motor or linear encoder.	Check if the software version supports the servo motor/linear encoder.	It is not compatible.	Replace the servo amplifier to one which software version supports the servo motor/linear encoder.	
					It is compatible.	Check (3).	
		(3)	An encoder is malfunctioning.	Replace the servo motor or linear encoder, and then check the repeatability.	It is not repeatable.	Replace the servo motor or linear encoder.	
					It is repeatable.	Replace the servo amplifier.	
1F.2	Incompatible load-side encoder	(1)	A load-side encoder, which is not compatible with the servo amplifier, was connected.	Check the model of the load-side encoder.	It is not compatible with the servo amplifier.	Use a load-side encoder which is compatible with the servo amplifier.	[A] [B] [WB] [GF]
					It is compatible with the servo amplifier.	Check (2).	
		(2)	The software version of the servo amplifier does not support the load-side encoder.	Check if the software version of the servo amplifier supports the load-side encoder.	It is not compatible.	Replace the servo amplifier to one which software version supports the load-side encoder.	
					It is compatible.	Check (3).	
		(3)	A load-side encoder is malfunctioning.	Replace the load-side encoder, and then check the repeatability.	It is not repeatable.	Replace the load-side encoder.	
					It is repeatable.	Replace the servo amplifier.	

Alarm No.: 20		Name: Encoder normal communication error 1					
Alarm content		An error occurred in the communication between an encoder and servo amplifier.					
Detail No.	Detail name	Cause		Check method	Check result	Action	Target
20.1	Encoder normal communication - Receive data error 1	(1)	An encoder cable is malfunctioning.	Check if the encoder cable is disconnected or shorted. When you use an A/B/Z-phase differential output linear encoder, check the wiring of the linear encoder.	It has a failure.	Repair or replace the cable.	[A] [B] [WB] [RJ010] [GF]
					It has no failure.	Check (2).	
		(2)	The external conductor of the encoder cable is not connected to the ground plate of the connector.	Check if it is connected.	It is not connected.	Connect it correctly.	
					It is connected.	Check (3).	
		(3)	The parameter setting of communication method is incorrect. [A]: [Pr. PC22] [B] [WB] [RJ010] [GF]: [Pr. PC04]	Check the parameter setting.	The setting is incorrect.	Set it correctly.	
					The setting is correct.	Check (4).	
		(4)	In the parallel drive system, the setting of [Pr. PF40] is incorrect.	Check the parameter setting.	The setting is incorrect.	Set it correctly.	
					The setting is correct.	Check (5).	
		(5)	The servo amplifier is malfunctioning.	Replace the servo amplifier, and then check the repeatability.	It is not repeatable.	Replace the servo amplifier.	
					It is repeatable.	Check (6).	
		(6)	An encoder is malfunctioning.	Replace the servo motor or linear encoder, and then check the repeatability.	It is not repeatable.	Replace the servo motor or linear encoder.	
					It is repeatable.	Check (7).	
		(7)	Something near the device caused it.	Check the noise, ambient temperature, vibration, etc.	There is a problem in the surrounding.	Take countermeasures against its cause.	
20.2	Encoder normal communication - Receive data error 2	Check it with the check method for [AL. 20.1].					
20.3	Encoder normal communication - Receive data error 3						

Alarm No.: 20		Name: Encoder normal communication error 1					
Alarm content		An error occurred in the communication between an encoder and servo amplifier.					
Detail No.	Detail name	Cause		Check method	Check result	Action	Target
20.5	Encoder normal communication - Transmission data error 1	(1)	When you use an A/B/Z-phase differential output linear encoder, the wiring of the linear encoder is incorrect.	Check if the A/B-phase pulse signals (PA, PAR, PB, and PBR) of the encoder cable are disconnected or shorted.	It is disconnected or shorted.	Repair the encoder cable.	[A] [B] [GF]
					It is not disconnected or shorted.	Check (2).	
		(2)	An encoder cable is malfunctioning.	Check it with the check method for [AL. 20.1].			[A] [B] [WB] [RJ010] [GF]
		(3)	The external conductor of the encoder cable is not connected to the ground plate of the connector.				
		(4)	When you use an A/B/Z-phase differential output linear encoder, the parameter setting is incorrect.				
		(5)	The servo amplifier is malfunctioning.				
		(6)	An encoder is malfunctioning.				
		(7)	Something near the device caused it.				
20.6	Encoder normal communication - Transmission data error 2	(1)	When you use an A/B/Z-phase differential output linear encoder, the wiring of the linear encoder is incorrect.	Check if the Z-phase pulse signals (PZ/PZR) of the encoder cable are disconnected or shorted.	It is disconnected or shorted.	Repair the encoder cable.	[A] [B] [GF]
					It is not disconnected or shorted.	Check (2).	
		(2)	An encoder cable is malfunctioning.	Check it with the check method for [AL. 20.1].			[A] [B] [WB] [RJ010] [GF]
		(3)	The external conductor of the encoder cable is not connected to the ground plate of the connector.				
		(4)	When you use an A/B/Z-phase differential output linear encoder, the parameter setting is incorrect.				
		(5)	The servo amplifier is malfunctioning.				
		(6)	An encoder is malfunctioning.				
		(7)	Something near the device caused it.				
20.7	Encoder normal communication - Transmission data error 3	Check it with the check method for [AL. 20.1].					
20.9	Encoder normal communication - Receive data error 4						
20.A	Encoder normal communication - Receive data error 5						

Alarm No.: 21	Name: Encoder normal communication error 2						
Alarm content	· The encoder detected an error signal.						
Detail No.	Detail name	Cause		Check method	Check result	Action	Target
21.1	Encoder data error 1	(1)	The encoder detected a high speed/ acceleration rate due to an oscillation or other factors.	Decrease the loop gain, and then check the repeatability.	It is not repeatable.	Use the encoder with low loop gain.	[A] [B] [WB] [RJ010] [GF]
					It is repeatable.	Check (2).	
		(2)	The external conductor of the encoder cable is not connected to the ground plate of the connector.	Check if it is connected.	It is not connected.	Connect it correctly.	
					It is connected.	Check (3).	
		(3)	An encoder is malfunctioning.	Replace the servo motor, and then check the repeatability.	It is not repeatable.	Replace the servo motor.	
					It is repeatable.	Check (4).	
		(4)	Something near the device caused it.	Check the noise, ambient temperature, vibration, etc.	There is a problem in the surrounding.	Take countermeasures against its cause.	
21.2	Encoder data update error	(1)	An encoder is malfunctioning.	Replace the servo motor, and then check the repeatability.	It is not repeatable.	Replace the servo motor.	[A] [B] [WB] [RJ010] [GF]
					It is repeatable.	Check (2).	
		(2)	The external conductor of the encoder cable is not connected to the ground plate of the connector.	Check if it is connected.	It is not connected.	Connect it correctly.	
					It is connected.	Check (3).	
		(3)	Something near the device caused it.	Check the noise, ambient temperature, etc.	There is a problem in the surrounding.	Take countermeasures against its cause.	
21.3	Encoder data waveform error	Check it with the check method for [AL. 21.2].					
21.4	Encoder non-signal error	(1)	A signal of the encoder has not been inputted.	Check if the encoder cable is wired correctly.	It has a failure.	Review the wiring.	[A] [B] [WB] [GF]
					It has no failure.	Check (2).	
		(2)	The external conductor of the encoder cable is not connected to the ground plate of the connector.	Check if it is connected.	It is not connected.	Connect it correctly.	
					It is connected.	Check (3).	
		(3)	Something near the device caused it.	Check the noise, ambient temperature, etc.	There is a problem in the surrounding.	Take countermeasures against its cause.	
21.5	Encoder hardware error 1	Check it with the check method for [AL. 21.2].					
21.6	Encoder hardware error 2						
21.9	Encoder data error 2	Check it with the check method for [AL. 21.1].					

Alarm No.: 24		Name: Main circuit error					
Alarm content		· A ground fault occurred on the servo motor power lines. · A ground fault occurred at the servo motor. · Power supply voltage for inverter circuit control is low. (Only for MR-J4W2-0303B6)					
Detail No.	Detail name	Cause		Check method	Check result	Action	Target
24.1	Ground fault detected by hardware detection circuit	(1)	The servo amplifier is malfunctioning.	Disconnect the servo motor power cables (U/V/W) and check if the alarm occurs.	It occurs.	Replace the servo amplifier.	[A] [B] [WB] [RJ010] [GF]
					It does not occur.	Check (2).	
		(2)	A ground fault or short occurred at the servo motor power cable.	Check if only the servo motor power cable is shorted.	It is shorted.	Replace the servo motor power cable.	
					It is not shorted.	Check (3).	
		(3)	A ground fault occurred at the servo motor.	Disconnect the servo motor power cables on motor side, and check insulation of the motor (between U/V/W/⏚).	It is shorted.	Replace the servo motor.	
					It is not shorted.	Check (4).	
		(4)	The main circuit power supply cable and servo motor power cable were shorted.	Shut off the power, and check if the main circuit power supply cable and servo motor power cable are in contact.	They are in contact.	Correct the wiring.	
					They are not in contact.	Check (5).	
		(5)	Something near the device caused it.	Check the noise, ambient temperature, etc.	There is a problem in the surrounding.	Take countermeasures against its cause.	
24.2	Ground fault detected by software detection function	(1)	For MR-J4W2-0303B6, the servo-on command was inputted when the control circuit power supply voltage was below 20 V.	Check the control circuit power supply voltage when the servo-on command was inputted.	The control circuit power supply voltage was below 20 V.	Input the servo-on command after the control circuit power supply voltage reaches 20 V or higher.	[WB]
					The control circuit power supply voltage was 20 V or higher.	Check (2).	
		(2)	The servo amplifier is malfunctioning.	Disconnect the servo motor power cable (U/V/W), and check if the alarm occurs.	It occurs.	Replace the servo amplifier.	[A] [B] [WB] [RJ010] [GF]
					It does not occur.	Check (3).	
		(3)	A ground fault or short occurred at the servo motor power cable.	Check if only the servo motor power cable is shorted.	It is shorted.	Replace the servo motor power cable.	
					It is not shorted.	Check (4).	
		(4)	A ground fault occurred at the servo motor.	Disconnect the servo motor power cables on motor side, and check insulation between phases (U/V/W/⏚).	It is shorted.	Replace the servo motor.	
					It is not shorted.	Check (5).	
		(5)	The main circuit power supply cable and servo motor power cable were shorted.	Shut off the power, and check if the main circuit power supply cable and servo motor power cable are in contact.	They are in contact.	Correct the wiring.	
					They are not in contact.	Check (6).	
		(6)	Something near the device caused it.	Check the noise, ambient temperature, etc.	There is a problem in the surrounding.	Take countermeasures against its cause.	

Alarm No.: 25		Name: Absolute position erased					
Alarm content		· The absolute position data is faulty. · Power was switched on for the first time in the absolute position detection system. · After the scale measurement encoder was set to the absolute position detection system, the power was switched on for the first time.					
Detail No.	Detail name	Cause		Check method	Check result	Action	Target
25.1	Servo motor encoder - Absolute position erased	(1)	Power was switched on for the first time in the absolute position detection system.	Check if this is the first time you switched on the power in the absolute position detection system.	This is the first time.	Check that the battery is mounted correctly, and make home position return.	[A] [B] [WB] [RJ010] [GF]
					This is not the first time.	Check (2).	
		(2)	1) When an MR-BAT6V1SET(-A) battery or MR-BT6VCASE battery case was used, CN4 of the servo amplifier was disconnected during control circuit power supply off. 2) When an MR-BAT6V1BJ battery for junction battery cable was used, both CN4 of the servo amplifier and MR-BAT6V1BJ battery for junction battery cable were disconnected from the MR-BT6VCBL03M junction battery cable.	Check if the battery was removed in this way when the control circuit power supply was off.	It was removed.	Check that the battery is mounted correctly, and make home position return.	
					It was not removed.	Check (3).	
		(3)	1) When an MR-BAT6V1SET(-A) battery or MR-BT6VCASE battery case was used, the power was turned off with the battery disconnected from CN4. 2) When an MR-BAT6V1BJ battery for junction battery cable was used, the power was turned off with the battery disconnected from CN4 and MR-BT6VCBL03M junction battery cable.	Check if the power was turned off in this state.	It was turned off.	Check that the battery is mounted correctly, and make home position return.	
					It was not turned off.	MR-BAT6V1BJ battery for junction battery cable: Refer to (4). MR-BAT6V1SET(-A) battery or MR-BT6VCASE battery case: Refer to (6).	
		(4)	The encoder cable was disconnected with the MR-BAT6V1BJ battery disconnected from MR-BT6VCBL03M junction battery cable.	Check if the encoder cable was disconnected in this state.	It was disconnected.	Check that the MR-BAT6V1BJ battery is connected to CN4 and MR-BT6VCBL03M junction battery cable, and execute a home position return.	[A] [B] [RJ010] [GF]
					It was not disconnected.	Check (5).	

Alarm No.: 25		Name: Absolute position erased					
Alarm content		· The absolute position data is faulty. · Power was switched on for the first time in the absolute position detection system. · After the scale measurement encoder was set to the absolute position detection system, the power was switched on for the first time.					
Detail No.	Detail name	Cause		Check method	Check result	Action	Target
25.1	Servo motor encoder - Absolute position erased	(5)	The MR-BT6VCBL03M junction battery cable is not connected to the encoder cable.	Check if the MR-BT6VCBL03M junction battery cable is connected to the encoder cable.	It is not connected.	Connect the MR-BT6VCBL03M junction battery cable to the encoder cable	[A] [B] [RJ010] [GF]
					It is connected.	Check (6).	
		(6)	The battery voltage is low. The battery is consumed.	Check the battery voltage with a tester. When an MR-BAT6V1BJ battery for junction battery cable was used, check the voltage of the connector (orange) for servo amplifier.	It is less than 3 V DC.	Replace the battery.	[A] [B] [WB] [RJ010] [GF]
					It is 3 V DC or more.	Check (7).	
		(7)	The voltage has dropped greatly in the encoder cable wired to the battery.	Check if a recommended cable is used for the encoder cable.	It is not used.	Use a recommended wire.	
					It is used.	Check (8).	
		(8)	A battery cable is malfunctioning.	Check for the loose connection with a tester.	It has a failure.	Replace the battery cable.	
					It has no failure.	Check (9).	
		(9)	There is a loose connection of the encoder cable on the servo motor side.	Check for the loose connection with a tester. Measure the voltage on the servo motor side.	It has a failure.	Repair or replace the encoder cable.	
					It has no failure.	Check (10).	
		(10)	The absolute position storage unit was not connected for using a direct drive motor.	Check if the absolute position storage unit is connected correctly.	It is not connected.	Connect the absolute position storage unit correctly.	[A] [B] [WB] [GF]
					It is connected.	Check (11).	
		(11)	The servo amplifier is malfunctioning.	Replace the servo amplifier, and then check the repeatability.	It is not repeatable.	Replace the servo amplifier.	[A] [B] [WB] [RJ010] [GF]
					It is repeatable.	Check (12).	
		(12)	An encoder is malfunctioning.	Replace the servo motor, and then check the repeatability.	It is not repeatable.	Replace the servo motor.	

Alarm No.: 25		Name: Absolute position erased					
Alarm content		· The absolute position data is faulty. · Power was switched on for the first time in the absolute position detection system. · After the scale measurement encoder was set to the absolute position detection system, the power was switched on for the first time.					
Detail No.	Detail name	Cause		Check method	Check result	Action	Target
25.2	Scale measurement encoder - Absolute position erased	(1)	After the scale measurement encoder was set to the absolute position detection system, the power was switched on for the first time.	Check if this is the first time to switch on the power after the scale measurement encoder was set to the absolute position detection system.	This is the first time.	Check that the battery is mounted correctly, and make home position return.	[B] [WB] [GF]
					This is not the first time.	Check (2).	
		(2)	The battery was removed (replaced) when the control circuit power supply was off.	Check if the battery was removed when the control circuit power supply was off.	It was removed.	Check that the battery is mounted correctly, and make home position return.	
					It was not removed.	Check (3).	
		(3)	The power was turned off with the battery disconnected from CN4.	Check if the power was turned off in this state.	It was turned off.	Check that the battery is mounted correctly, and make home position return.	
					It was not turned off.	Check (4).	
		(4)	The battery voltage is low. The battery is consumed.	Check the battery voltage with a tester.	It is less than 3 V DC.	Replace the battery.	
					It is 3 V DC or more.	Check (5).	
		(5)	The voltage has dropped greatly in the encoder cable wired to the battery.	Check if a recommended cable is used for the encoder cable.	It is not used.	Use a recommended wire.	
					It is used.	Check (6).	
		(6)	A battery cable is malfunctioning.	Check for the loose connection with a tester.	It has a failure.	Replace the battery cable.	
					It has no failure.	Check (7).	
		(7)	There is a loose connection of the encoder cable on the scale measurement encoder side.	Check for the loose connection with a tester. Measure the voltage on the scale measurement encoder side.	It has a failure.	Repair or replace the encoder cable.	
					It has no failure.	Check (8).	
		(8)	The servo amplifier is malfunctioning.	Replace the servo amplifier, and then check the repeatability.	It is not repeatable.	Replace the servo amplifier.	
					It is repeatable.	Check (9).	
		(9)	The scale measurement encoder is malfunctioning.	Replace the scale measurement encoder, and then check the repeatability.	It is not repeatable.	Replace the scale measurement encoder.	

Alarm No.: 27		Name: Initial magnetic pole detection error					
Alarm content		· The initial magnetic pole detection was not completed properly.					
Detail No.	Detail name	Cause		Check method	Check result	Action	Target
27.1	Magnetic pole detection - Abnormal termination	(1)	A moving part collided against the machine.	Check if it collided.	It collided.	Move the start position of the magnetic pole detection.	[A] [B] [WB] [GF]
					It did not collided.	Check (2).	
		(2)	The wiring of the servo motor power cable is incorrect.	Check if the wiring of the servo motor power cable is correct.	It has a failure.	Correct the wiring.	
					It has no failure.	Check (3).	
		(3)	The linear encoder resolution setting differs from the setting value.	Check the setting of [Pr. PL02] and [Pr. PL03].	The setting is incorrect.	Set it correctly.	
					The setting is correct.	Check (4).	
		(4)	The direction of mounting linear encoder is incorrect.	Check polarities of the linear encoder and the linear servo motor.	The mounting direction is incorrect.	Mount it correctly. Review the "encoder pulse count polarity selection" setting of the parameter as required. [A]: [Pr. PC45] [B] [WB] [GF]: [Pr. PC27]	
					The mounting direction is correct.	Check (5).	
		(5)	An excitation level of the magnetic pole detection voltage level is small.	Check if the travel distance during the magnetic pole detection is too short (for a position detection method).	It is too short.	Increase it with the [Pr. PL09] setting.	
				Check if the travel distance during the magnetic pole detection is too long or if a vibration is occurring (for a minute position detection method).	The travel distance is too long or a vibration is occurring.	Review the [Pr. PL17] setting.	
27.2	Magnetic pole detection - Time out error	(1)	Servo-on was enabled when the primary side of linear servo motor or rotor of direct drive motor did not stop.	Check if servo-on was enabled when the motor did not stop.	Servo-on was enabled when the motor did not stop.	Stop the linear servo motor and the direct drive motor, and enable servo-on again.	
					Servo-on was enabled when the motor stopped.	Check (2).	
		(2)	Only one of the limit switches is on during magnetic pole detection.	Check the limit switches.	It has a failure.	Remove the cause. Move the start position of the magnetic pole detection.	
					It has no failure.	Check (3).	
		(3)	The magnetic pole detection voltage level is small.	Check if the travel distance during the magnetic pole detection is too short (for a position detection method).	It is too short.	Increase it with the [Pr. PL09] setting.	

Alarm No.: 27	Name: Initial magnetic pole detection error						
Alarm content	· The initial magnetic pole detection was not completed properly.						
Detail No.	Detail name	Cause		Check method	Check result	Action	Target
27.3	Magnetic pole detection - Limit switch error	(1)	Both of the limit switches are off during the magnetic pole detection.	Check the limit switches.	Both of them are off.	Turn on the limit switches. When using a direct drive motor, also check (2).	[A] [B] [WB] [GF]
		(2)	When using a direct drive motor in a system where the motor rotates one revolution or more, the following stroke limit signals are not enabled with a parameter. [A]: LSP and LSN [B] [WB]: FLS and RLS [GF]: LSP and LSN (FLS and RLS from the controller)	Check the [Pr. PL08] setting.	The [Pr. PL08] setting is "_ 0 _ _".	Set the [Pr. PL08] setting to "_ 1 _ _".	
27.4	Magnetic pole detection - Estimated error	Check it with the check method for [AL. 27.1].					
27.5	Magnetic pole detection - Position deviation error						
27.6	Magnetic pole detection - Speed deviation error						
27.7	Magnetic pole detection - Current error						

Alarm No.: 28	Name: Linear encoder error 2						
Alarm content	· Working environment of linear encoder is not normal.						
Detail No.	Detail name	Cause		Check method	Check result	Action	Target
28.1	Linear encoder - Environment error	(1)	The ambient temperature of the linear encoder is out of specifications.	Check the ambient temperature of the linear encoder.	It is out of specifications.	Lower the temperature. Contact the linear encoder manufacturer.	[A] [B] [WB] [GF]
					It is within specifications.	Check (2).	
		(2)	The signal level of the linear encoder has dropped.	Check the mounting condition of the linear encoder.	It has a failure.	Correct the mounting method of the linear encoder.	

Alarm No.: 2A		Name: Linear encoder error 1					
Alarm content		· An error of the linear encoder was detected. (The details vary depending on the linear encoder manufacturer.)					
Detail No.	Detail name	Cause		Check method	Check result	Action	Target
2A.1	Linear encoder error 1-1	(1)	Mounting condition of the linear encoder and head is failure.	Adjust the positions of the scale and head, and then check the repeatability.	It is not repeatable.	Use the equipment at the adjusted position.	[A] [B] [WB] [GF]
					It is repeatable.	Check (2).	
		(2)	The external conductor of the encoder cable is not connected to the ground plate of the connector.	Check if it is connected.	It is not connected.	Connect it correctly.	
					It is connected.	Check (3).	
		(3)	Something near the device caused it.	Check the noise, ambient temperature, vibration, etc.	There is a problem in the surrounding.	Take countermeasures against its cause.	
					There is no problem in the surrounding.	Check (4).	
		(4)	An alarm of the linear encoder was detected.	Check the content of the alarm detail list of the Linear Encoder Instruction Manual.	Remove its cause described in the instruction manual.	Contact each encoder manufacturer for how to deal with it.	
2A.2	Linear encoder error 1-2	Check it with the check method for [AL. 2A.1].					
2A.3	Linear encoder error 1-3						
2A.4	Linear encoder error 1-4						
2A.5	Linear encoder error 1-5						
2A.6	Linear encoder error 1-6						
2A.7	Linear encoder error 1-7						
2A.8	Linear encoder error 1-8						

Alarm No.: 2B		Name: Encoder counter error					
Alarm content		· Data which encoder created is failure.					
Detail No.	Detail name	Cause		Check method	Check result	Action	Target
2B.1	Encoder counter error 1	(1)	An encoder cable is malfunctioning.	Check if the encoder cable is disconnected or shorted.	It has a failure.	Repair or replace the cable.	[A] [B] [WB] [GF]
					It has no failure.	Check (2).	
		(2)	The external conductor of the encoder cable is not connected to the ground plate of the connector.	Check if it is connected.	It is not connected.	Connect it correctly.	
					It is connected.	Check (3).	
		(3)	Something near the device caused it.	Check the noise, ambient temperature, vibration, etc.	There is a problem in the surrounding.	Take countermeasures against its cause.	
					There is no problem in the surrounding.	Check (4).	
		(4)	An encoder is malfunctioning.	Replace the direct drive motor, and then check the repeatability.	It is not repeatable.	Replace the direct drive motor.	
2B.2	Encoder counter error 2	Check it with the check method for [AL. 2B.1].					

Alarm No.: 30		Name: Regenerative error					
Alarm content		· Permissible regenerative power of the built-in regenerative resistor or regenerative option is exceeded. · A regenerative transistor in the servo amplifier is malfunctioning.					
Detail No.	Detail name	Cause		Check method	Check result	Action	Target
30.1	Regeneration heat error	(1)	The setting of the regenerative resistor (regenerative option) is incorrect.	Check the regenerative resistor (regenerative option) and [Pr. PA02] setting.	The setting value is incorrect.	Set it correctly.	[A] [B] [WB] [RJ010] [GF]
					It is set correctly.	Check (2).	
		(2)	The regenerative resistor (regenerative option) is not connected.	Check if the regenerative resistor (regenerative option) is connected correctly.	It is not connected correctly.	Connect it correctly.	
					It is connected correctly.	Check (3).	
		(3)	The combination of regenerative resistor (regenerative option) and servo amplifier is incorrect.	Check if the regenerative resistor (regenerative option) and the servo amplifier are connected in the specified combination.	The combination is incorrect.	Use them in the correct combination.	
					The combination is correct.	Check (4).	
		(4)	The power supply voltage is high.	Check if the voltage of the input power supply is over the prescribed value. 200 V class: 264 V AC 400 V class: 528 V AC 100 V class: 132 V AC 48 V DC setting: 70 V DC 24 V DC setting: 50 V DC	It is higher than the prescribed value.	Reduce the power supply voltage.	
					It is at the prescribed value or lower.	Check (5).	
		(5)	The regenerative load ratio exceeded 100%.	Check the regenerative load ratio when alarm occurs.	It is 100% or more.	Reduce the frequency of positioning. Increase the deceleration time constant. Reduce the load. Use a regenerative option if it is not being used. Review the regenerative option capacity. For MR-J4-03A6(-RJ) and MR-J4W2-0303B6, check if the main circuit power supply voltage is 48 V DC even though the setting is 24 V DC.	
30.2	Regeneration signal error	(1)	A detection circuit of the servo amplifier is malfunctioning.	Check if the regenerative resistor (regenerative option) is overheating.	It is overheating abnormally.	Replace the servo amplifier.	
30.3	Regeneration feedback signal error	(1)	A detection circuit of the servo amplifier is malfunctioning.	Remove the regenerative option or built-in regenerative resistor, and then check if the alarm occurs at power on. For MR-J4-03A6(-RJ) and MR-J4W2-0303B, check if the alarm occurs at power on.	The alarm occurs.	Replace the servo amplifier.	
					The alarm does not occur.	Check (2).	
		(2)	Something near the device caused it.	Check the noise, ground fault, ambient temperature, etc.	There is a problem in the surrounding.	Take countermeasures against its cause.	

Alarm No.: 31		Name: Overspeed					
Alarm content		· The servo motor speed has exceeded the instantaneous permissible speed. · The linear servo motor speed has exceeded the instantaneous permissible speed.					
Detail No.	Detail name	Cause		Check method	Check result	Action	Target
31.1	Abnormal motor speed	(1)	The command pulse frequency is high.	Check the command pulse frequency.	The command pulse frequency is high.	Check operation pattern.	[A]
					The command pulse frequency is low.	Check (2).	
		(2)	The settings of the electronic gear are incorrect.	Check the setting value of the electronic gear.	The setting value is incorrect.	Review the settings.	
					The setting value is correct.	Check (5).	
		(3)	The command from the controller is excessive.	Check if the command from the controller is over the permissible speed.	It is over the permissible speed.	Check operation pattern.	[B] [WB] [RJ010] [GF]
					It is less than the permissible speed.	Check (4).	
		(4)	A larger speed command than the overspeed alarm level was inputted.	Check that the actual servo motor speed is higher than the setting value of [Pr. PC08 Overspeed alarm detection level].	The servo motor speed is higher than the overspeed alarm detection level.	Review the [Pr. PC08] setting.	
					The servo motor speed is lower than the overspeed alarm detection level.	Check (5).	
		(5)	The servo motor was at the maximum torque (maximum thrust) at the time of acceleration.	Check if the torque (thrust) at the time of acceleration is the maximum torque (maximum thrust).	It is the maximum torque (maximum thrust).	Increase the acceleration/deceleration time constant. Or reduce the load.	[A] [B] [WB] [RJ010] [GF]
					It is less than the maximum torque (maximum thrust).	Check (6).	
		(6)	The servo system is unstable and oscillating.	Check if the servo motor is oscillating.	It is oscillating.	Adjust the servo gain. Or reduce the load.	
					It is not oscillating.	Check (7).	
		(7)	The velocity waveform has overshot.	Check if it is overshooting because the acceleration time constant is too short.	It is overshooting.	Increase the acceleration/deceleration time constant.	
					It is not overshooting.	Check (8).	
		(8)	For MR-J4-03A6(-RJ) and MR-J4W2-0303B6, the speed has overshot when the power was restored from a temporary bus voltage drop during an operation.	Check if a bus voltage drops temporarily during an operation.	The bus voltage has dropped.	Review the capacity of the 24 V DC main circuit power supply. Increase the voltage of the 24 V DC main circuit power supply within the permissible voltage fluctuation range. Change the main circuit input voltage to 48 V DC. Check operation pattern.	[A] [WB]
					The bus voltage has not dropped.	Check (9).	
		(9)	The connection destination of the encoder cable is incorrect.	Check the connection destinations of CN2A, CN2B, and CN2C.	It is not correct.	Wire it correctly.	[WB]
					It is correct.	Check (10).	
		(10)	The connection of the servo motor is incorrect.	Check the wiring of U/V/W.	It is incorrect.	Set it correctly.	[A] [B] [WB] [RJ010] [GF]
					It is correct.	Check (11).	
		(11)	The encoder or linear encoder is malfunctioning.	Check if the alarm is occurring during less than instantaneous permissible speed.	It is occurring during less than instantaneous permissible speed.	Replace the servo motor or linear encoder.	

Alarm No.: 32		Name: Overcurrent					
Alarm content		A current higher than the permissible current was applied to the servo amplifier.					
Detail No.	Detail name	Cause		Check method	Check result	Action	Target
32.1	Overcurrent detected at hardware detection circuit (during operation)	(1)	The servo amplifier is malfunctioning.	Disconnect the servo motor power cables (U/V/W) and check if the alarm occurs.	It occurs.	Replace the servo amplifier.	[A] [B] [WB] [RJ010] [GF]
					It does not occur.	Check (2).	
		(2)	A ground fault or short occurred at the servo motor power cable.	Check if only the servo motor power cable is shorted.	It is shorted.	Replace the servo motor power cable.	
					It is not shorted.	Check (3).	
		(3)	The servo motor is malfunctioning.	Disconnect the servo motor power cables on motor side, and check insulation of the motor (between U/V/W/⏚/⏚).	A ground fault is occurring.	Replace the servo motor.	
					A ground fault is not occurring.	Check (4).	
		(4)	The dynamic brake is malfunctioning.	Check if the alarm occurs when you turn on the servo-on command.	It occurs.	Replace the servo amplifier.	
					It does not occur.	[WB]: Check (5). [A] [B] [RJ010] [GF]: Check (7).	
		(5)	The connection destination of the encoder cable is incorrect.	Check the connection destinations of CN2A, CN2B, and CN2C.	It is not correct.	Wire it correctly.	[WB]
					It is correct.	Check (6).	
		(6)	Something near the device caused it.	Check the noise, ambient temperature, etc.	There is a problem in the surrounding.	Take countermeasures against its cause.	
		(7)	Something near the device caused it.	Check the noise, ambient temperature, etc.	There is a problem in the surrounding.	Take countermeasures against its cause.	[A] [B] [RJ010] [GF]
					There is no problem in the surrounding.	Check it with the check method for [AL. 45.1].	
32.2	Overcurrent detected at software detection function (during operation)	(1)	The servo gain is high.	Check if an oscillation is occurring.	An oscillation is occurring.	Reduce the speed loop gain ([Pr. PB09]). For MR-J4-03A6(-RJ) and MR-J4W2-0303B6, check if the main circuit power supply voltage is 48 V DC even though the setting is 24 V DC.	[A] [B] [WB] [RJ010] [GF]
					An oscillation is not occurring.	Check (2).	
		(2)	The servo amplifier is malfunctioning.	Disconnect the servo motor power cables (U/V/W) and check if the alarm occurs.	It occurs.	Replace the servo amplifier.	
					It does not occur.	Check (3).	
		(3)	A ground fault or short occurred at the servo motor power cable.	Check if only the servo motor power cable is shorted.	It is shorted.	Replace the servo motor power cable.	
					It is not shorted.	Check (4).	
		(4)	The servo motor is malfunctioning.	Disconnect the servo motor power cables on motor side, and check insulation of the motor (between U/V/W/⏚/⏚).	A ground fault is occurring.	Replace the servo motor.	
					A ground fault is not occurring.	Check (5).	
		(5)	The connection destination of the encoder cable is incorrect.	Check the connection destinations of CN2A, CN2B, and CN2C.	It is not correct.	Connect it correctly.	[WB]
					It is correct.	Check (6).	
		(6)	Something near the device caused it.	Check the noise, ambient temperature, etc.	There is a problem in the surrounding.	Take countermeasures against its cause.	[A] [B] [WB] [RJ010] [GF]

Alarm No.: 32		Name: Overcurrent				
Alarm content		· A current higher than the permissible current was applied to the servo amplifier.				
Detail No.	Detail name	Cause	Check method	Check result	Action	Target
32.3	Overcurrent detected at hardware detection circuit (during a stop)	Check it with the check method for [AL. 32.1].				
32.4	Overcurrent detected at software detection function (during a stop)	Check it with the check method for [AL. 32.2].				

Alarm No.: 33		Name: Overvoltage					
Alarm content		· The value of the bus voltage exceeded the prescribed value. 200 V class: 400 V DC 400 V class: 800 V DC 100 V class: 400 V DC 48 V DC setting: 75 V DC 24 V DC setting: 55 V DC					
Detail No.	Detail name	Cause		Check method	Check result	Action	Target
33.1	Main circuit voltage error	(1)	The setting of the regenerative resistor (regenerative option) is incorrect.	Check the regenerative resistor (regenerative option) and [Pr. PA02] setting.	The setting value is incorrect.	Set it correctly.	[A] [B] [WB] [RJ010] [GF]
					It is set correctly.	Check (2).	
		(2)	The regenerative resistor (regenerative option) is not connected.	Check if the regenerative resistor (regenerative option) is connected correctly.	It is not connected correctly.	Connect it correctly.	
					It is connected correctly.	Check (3).	
		(3)	Wire breakage of built-in regenerative resistor or regenerative option	Measure the resistance of the built-in regenerative resistor or regenerative option.	The resistance is abnormal.	When using a built-in regenerative resistor, replace the servo amplifier. When using a regenerative option, replace the regenerative option.	
					The resistance is normal.	Check (4).	
		(4)	The regeneration capacity is insufficient.	Set a longer deceleration time constant, and then check the repeatability.	It is not repeatable.	When using a built-in regenerative resistor, use a regenerative option. When using a regenerative option, use a larger capacity one.	
					It is repeatable.	Check (5).	
		(5)	Power supply voltage high.	Check if the voltage of the input power supply is over the prescribed value. 200 V class: 264 V AC 400 V class: 528 V AC 100 V class: 132 V AC 48 V DC setting: 75 V DC 24 V DC setting: 55 V DC	It is higher than the prescribed value.	Reduce the power supply voltage.	
					It is at the prescribed value or lower.	Check (6).	
		(6)	Something near the device caused it.	Check the noise, ambient temperature, etc.	There is a problem in the surrounding.	Take countermeasures against its cause.	

Alarm No.: 34		Name: SSCNET receive error 1					
Alarm content		An error occurred in SSCNET III/H communication. (continuous communication error with 3.5 ms interval)					
Detail No.	Detail name	Cause		Check method	Check result	Action	Target
34.1	SSCNET receive data error	(1)	The SSCNET III cable was disconnected.	Check the SSCNET III cable connection.	It is disconnected.	Turn off the control circuit power supply of the servo amplifier, and then connect the SSCNET III cable.	[B] [WB]
					It is connected.	Check (2).	
		(2)	The surface at the end of SSCNET III cable got dirty.	Wipe off the dirt from the cable tip, and then check the repeatability.	It is not repeatable.	Take measure to keep the cable tip clean.	
					It is repeatable.	Check (3).	
		(3)	The SSCNET III cable is broken or severed.	Check if the SSCNET III cable is malfunctioning.	It has a failure.	Replace the SSCNET III cable.	
					It has no failure.	Check (4).	
		(4)	A vinyl tape is stacked to the SSCNET III cable. Or a wire insulator containing migrating plasticizer is adhered to the cable.	Check if a vinyl tape is used. Check if the cable is contacting with other cables.	It is used. They are in contact.	Take countermeasures against its cause.	
					It is not used. They are not in contact.	Check (5).	
		(5)	The servo amplifier is malfunctioning.	Replace the servo amplifier, and then check the repeatability.	It is not repeatable.	Replace the servo amplifier.	
					It is repeatable.	Check (6).	
		(6)	The previous or next axis servo amplifier of the alarm occurred is malfunctioning.	Replace the previous and next servo amplifier of the axis alarm occurred, and then check the repeatability.	It is not repeatable.	Replace the servo amplifier.	
					It is repeatable.	Check (7).	
		(7)	The controller is malfunctioning.	Replace the controller, and then check the repeatability.	It is not repeatable.	Replace the controller.	
					It is repeatable.	Check (8).	
		(8)	Something near the device caused it.	Check the noise, ambient temperature, etc.	There is a problem in the surrounding.	Take countermeasures against its cause.	
34.2	SSCNET connector connection error	Check it with the check method for [AL. 34.1].					
34.3	SSCNET communication data error						
34.4	Hardware error signal detection						
34.5	SSCNET receive data error (safety observation function)						
34.6	SSCNET communication data error (safety observation function)						

Alarm No.: 35		Name: Command frequency error					
Alarm content		Input pulse frequency of command pulse is too high.					
Detail No.	Detail name	Cause		Check method	Check result	Action	Target
35.1	Command frequency error	(1)	The command pulse frequency is high.	Check the command pulse frequency.	The command pulse frequency is high.	Check operation pattern.	[A]
					The command pulse frequency is low.	Check (2).	
		(2)	The setting of "Command input pulse train filter selection" in [Pr. PA13] is not correct.	Check if the command pulse frequency is within the setting range of the filter.	It is out of setting range.	Review the filter setting.	
					It is within the setting range.	Check (6).	
		(3)	Inputted frequency with a manual pulse generator is high.	Check the inputted frequency of the manual pulse generator.	The command pulse frequency is high.	Reduce the inputted frequency of the manual pulse generator.	
					The command pulse frequency is low.	Check (6).	
		(4)	The command from the controller is excessive.	Check if the command from the controller is the permissible speed or higher.	It is the permissible speed or higher.	Check operation pattern.	[B] [WB] [RJ010] [GF]
					It is lower than the permissible speed.	Check (5).	
		(5)	The controller is malfunctioning.	Replace the controller, and then check the repeatability.	It is not repeatable.	Replace the controller.	
					It is repeatable.	Check (6).	
		(6)	The command pulse frequency is high when the synchronous encoder axis is selected.	Check the command pulse frequency.	The command pulse frequency is high.	Check operation pattern.	[GF]
					The command pulse frequency is low.	Check (7).	
		(7)	Something near the device caused it.	Check the noise, ambient temperature, etc.	There is a problem in the surrounding.	Take countermeasures against its cause.	[A] [B] [WB] [RJ010] [GF]

Alarm No.: 36		Name: SSCNET receive error 2					
Alarm content		· An error occurred in SSCNET III/H communication. (intermittent communication error with about 70 ms interval)					
Detail No.	Detail name	Cause		Check method	Check result	Action	Target
36.1	Continuous communication data error	(1)	The SSCNET III cable was disconnected.	Check the SSCNET III cable connection.	It is disconnected.	Turn off the control circuit power supply of the servo amplifier, and then connect the SSCNET III cable.	[B] [WB]
					It is connected.	Check (2).	
		(2)	The surface at the end of SSCNET III cable got dirty.	Wipe off the dirt from the cable tip, and then check the repeatability.	It is not repeatable.	Take measure to keep the cable tip clean.	
					It is repeatable.	Check (3).	
		(3)	The SSCNET III cable is broken or severed.	Check if the SSCNET III cable is malfunctioning.	It has a failure.	Replace the SSCNET III cable.	
					It has no failure.	Check (4).	
		(4)	A vinyl tape is stacked to the SSCNET III cable. Or a wire insulator containing migrating plasticizer is adhered to the cable.	Check if a vinyl tape is used. Check if the cable is contacting with other cables.	It is used. They are in contact.	Take countermeasures against its cause.	
					It is not used. They are not in contact.	Check (5).	
		(5)	The servo amplifier is malfunctioning.	Replace the servo amplifier, and then check the repeatability.	It is not repeatable.	Replace the servo amplifier.	
					It is repeatable.	Check (6).	
		(6)	The previous or next axis servo amplifier of the alarm occurred is malfunctioning.	Replace the previous and next servo amplifier of the axis alarm occurred, and then check the repeatability.	It is not repeatable.	Replace the servo amplifier.	
					It is repeatable.	Check (7).	
		(7)	The controller is malfunctioning.	Replace the controller, and then check the repeatability.	It is not repeatable.	Replace the controller.	
					It is repeatable.	Check (8).	
		(8)	Something near the device caused it.	Check the noise, ambient temperature, etc.	There is a problem in the surrounding.	Take countermeasures against its cause.	
36.2	Continuous communication data error (safety observation function)	Check it with the check method for [AL. 36.1].					

Alarm No.: 37		Name: Parameter error					
Alarm content		· Parameter setting is incorrect. · Point table setting is incorrect.					
Detail No.	Detail name	Cause		Check method	Check result	Action	Target
37.1	Parameter setting range error	(1)	A parameter was set out of setting range.	Check the parameter error No. and setting value.	It is out of setting range.	Set it within the range.	[A] [B] [WB] [RJ010] [GF]
					It is within the setting range.	Check (2).	
		(2)	A parameter setting contradicts another.	Check the parameter error No. and setting value.	A setting value is incorrect.	Correct the setting value.	
					A setting value is correct.	Check (3).	
		(3)	The parameter setting has changed due to a servo amplifier malfunction.	Replace the servo amplifier, and then check the repeatability.	It is not repeatable.	Replace the servo amplifier.	
37.2	Parameter combination error	(1)	A parameter setting contradicts another.	Check the parameter error No. and setting value.	A setting value is incorrect.	Correct the setting value. (When the master-slave function is set, also check (2).)	
		(2)	[Pr. PA01] on the master side was set to other than "standard control mode" or "fully closed loop control mode".	Check the parameter setting.	[Pr. PA01] is set to other than "standard control mode" or "fully closed loop control mode".	Set [Pr. PA01] to "standard control mode" or "fully closed loop control mode".	[B] (master)
					[Pr. PA01] is set to "standard control mode" or "fully closed loop control mode".	Check (4).	
		(3)	[Pr. PA01] on the slave side was set to other than "standard control mode".	Check the parameter setting.	[Pr. PA01] is set to other than "standard control mode".	Set [Pr. PA01] to "standard control mode".	[B] (slave)
					[Pr. PA01] is set to "standard control mode".	Check (4).	
		(4)	"Forced stop deceleration function selection" in [Pr. PA04] is enabled.	Check the parameter setting.	"Forced stop deceleration function selection" setting in [Pr. PA04] is enabled.	Disable "forced stop deceleration function selection" in [Pr. PA04].	[B] (master) (slave)
37.3	Point table setting error	(1)	The setting of point tables is incorrect.	Check if the setting of point tables is within the setting range. Check the parameter error No. and point table error No. with the point table error No. display on the display of the servo amplifier. Or check the setting value with the point table display of MR Configurator2.	A setting value is incorrect.	Correct the setting value.	[A] [GF]
					A setting value is correct.	Check (2).	
		(2)	A point table setting has changed due to a servo amplifier malfunction.	Replace the servo amplifier, and then check the repeatability.	It is not repeatable.	Replace the servo amplifier.	

Alarm No.: 39		Name: Program error					
Alarm content		· A program used for the program operation is incorrect.					
Detail No.	Detail name	Cause		Check method	Check result	Action	Target
39.1	Program error	(1)	A checksum of the program did not match at power-on. (The program has an error.)	Check if an error occurred (such as entered noise, power-off) at program write.	It has a failure.	Rewrite the program.	[A]
					It has no failure.	Check (2).	
		(2)	A program has changed due to a servo amplifier malfunction.	Replace the servo amplifier, and then check the repeatability.	It is not repeatable.	Replace the servo amplifier.	
39.2	Instruction argument external error	(1)	A program has never been written since program initialization.	Check if a program was written.	It was not executed.	Write the program.	
					It was executed.	Check (2).	
		(2)	A command argument is using a value out of specifications.	Check if the command description has a failure.	It has a failure.	Correct the command description.	
					It has no failure.	Check (3).	
		(3)	A program has changed due to a servo amplifier malfunction.	Replace the servo amplifier, and then check the repeatability.	It is not repeatable.	Replace the servo amplifier.	
39.3	Register No. error	(1)	A specified number of the general purpose register used for a command is a value out of specifications.	Check if the command description has a failure.	It has a failure.	Correct the command description.	
					It has no failure.	Check (2).	
		(2)	A program has changed due to a servo amplifier malfunction.	Replace the servo amplifier, and then check the repeatability.	It is not repeatable.	Replace the servo amplifier.	
39.4	Non-correspondence instruction error	(1)	A used command is not correspondent to the program.	Check if the command description has a failure.	It has a failure.	Correct the command description.	
					It has no failure.	Check (2).	
		(2)	A program has changed due to a servo amplifier malfunction.	Replace the servo amplifier, and then check the repeatability.	It is not repeatable.	Replace the servo amplifier.	

Alarm No.: 3A		Name: Inrush current suppression circuit error					
Alarm content		· The inrush current suppression circuit error was detected.					
Detail No.	Detail name	Cause		Check method	Check result	Action	Target
3A.1	Inrush current suppression circuit error	(1)	Inrush current suppressor circuit is malfunctioning.	Replace the servo amplifier, and then check the repeatability.	It is not repeatable.	Replace the servo amplifier.	[A] [B] [WB] [RJ010] [GF]

Alarm No.: 3D		Name: Parameter setting error for driver communication					
Alarm content		· The control parameter setting value for driver communication is incorrect.					
Detail No.	Detail name	Cause		Check method	Check result	Action	Target
3D.1	Parameter combination error for driver communication on slave	(1)	The master transmit data selection for driver communication is not set correctly.	Check the settings of [Pr. PD16] and [Pr. PD17] on the master side.	The setting is incorrect.	Set it correctly.	[B] (slave)
3D.2	Parameter combination error for driver communication on master	Check it with the check method for [AL. 3D.1].					[B] (master)

Alarm No.: 3E		Name: Operation mode error					
Alarm content		· The operation mode setting was changed.					
Detail No.	Detail name	Cause		Check method	Check result	Action	Target
3E.1	Operation mode error	(1)	The MR-J4 servo amplifier used in J3 compatibility mode was connected to the other SSCNET Ⅲ/H controller. Or an MR-J4 servo amplifier which was connected to SSCNET Ⅲ/H controller was connected to another SSCNET Ⅲ controller.	Check if the connection was changed to like these.	The connection was changed.	Initialize the servo amplifier with the built-in application software "MR-J4(W)-B mode selection" of MR Configurator2, and then connect the amplifier to the controller.	[B] [WB]
		(2)	The [Pr. PA01] setting value was changed.	Check if [Pr. PA01] was changed.	It was changed.	Set [Pr. PA01] correctly.	
3E.6	Operation mode switch error	(1)	A method of positioning data memorized in the servo amplifier (point table method/program method) is different from the actual positioning mode (point table method/program method).	Check if the positioning mode (point table method/program method) was changed. Positioning mode: [Pr. PA01] "_ _ _ x"	It was changed. (with a purpose)	After changing the positioning mode, initialize the point table method/ program method. (Refer to section 7.2.8 [Pr. PT34] of "MR-J4-_A_-RJ Servo Amplifier Instruction Manual (Positioning Mode)")	[A]
					It was changed by mistake.	Set the positioning mode back to the correct setting.	
3E.8	MR-D30 combination error	(1)	With CC-Link IE Field Network Basic communication selected, MR-D30 functional safety unit was connected.	Check if MR-D30 is connected.	It is connected.	Disconnect MR-D30.	[GF]

Alarm No.: 42		Name: Servo control error (for linear servo motor and direct drive motor)					
Alarm content		· A servo control error occurred.					
Detail No.	Detail name	Cause		Check method	Check result	Action	Target
42.1	Servo control error by position deviation	(1)	The linear encoder resolution setting differs from the setting value.	Check the setting of [Pr. PL02] and [Pr. PL03].	The setting is incorrect.	Set it correctly.	[A] [B] [WB] [GF]
					The setting is correct.	Check (2).	
		(2)	The direction of mounting linear encoder is incorrect.	Check polarities of the linear encoder and the linear servo motor.	The mounting direction is incorrect.	Mount it correctly. Review the "encoder pulse count polarity selection" setting of the parameter as required. [A]: [Pr. PC45] [B] [WB] [GF]: [Pr. PC27]	
					The mounting direction is correct.	Check (3).	
		(3)	The connection of the servo motor is incorrect.	Check the wiring.	The wiring is incorrect.	Connect it correctly.	
					The wiring is correct.	Check (4).	
		(4)	The initial magnetic pole detection was not executed.	Execute the magnetic pole detection, and then check the repeatability.	It is not repeatable.	Execute the magnetic pole detection.	
					It is repeatable.	Check (5).	
		(5)	The position deviation exceeded the detection level.	Check the value of droop pulses.	The deviation is large.	Review the operation status. Review the [Pr. PL05] setting depending on circumstances.	

Alarm No.: 42		Name: Servo control error (for linear servo motor and direct drive motor)					
Alarm content		· A servo control error occurred.					
Detail No.	Detail name	Cause		Check method	Check result	Action	Target
42.2	Servo control error by speed deviation	(1)	The linear encoder resolution setting differs from the setting value.	Check the setting of [Pr. PL02] and [Pr. PL03].	The setting is incorrect.	Set it correctly.	[A] [B] [WB] [GF]
					The setting is correct.	Check (2).	
		(2)	The direction of mounting linear encoder is incorrect.	Check polarities of the linear encoder and the linear servo motor.	The mounting direction is incorrect.	Mount it correctly. Review the "encoder pulse count polarity selection" setting of the parameter as required. [A]: [Pr. PC45] [B] [WB] [GF]: [Pr. PC27]	
					The mounting direction is correct.	Check (3).	
		(3)	The connection of the servo motor is incorrect.	Check the wiring.	The wiring is incorrect.	Connect it correctly.	
					The wiring is correct.	Check (4).	
		(4)	The initial magnetic pole detection was not executed.	Execute the magnetic pole detection, and then check the repeatability.	It is not repeatable.	Execute the magnetic pole detection.	
					It is repeatable.	Check (5).	
		(5)	The speed deviation exceeded the detection level.	Calculate the deviation between the speed command and actual speed.	The deviation is large.	Review the operation status. Review the [Pr. PL06] setting depending on circumstances.	
42.3	Servo control error by torque/ thrust deviation	(1)	The linear encoder resolution setting differs from the setting value.	Check the setting of [Pr. PL02] and [Pr. PL03].	The setting is incorrect.	Set it correctly.	
					The setting is correct.	Check (2).	
		(2)	The direction of mounting linear encoder is incorrect.	Check polarities of the linear encoder and the linear servo motor.	The mounting direction is incorrect.	Mount it correctly. Review the "encoder pulse count polarity selection" setting of the parameter as required. [A]: [Pr. PC45] [B] [WB] [GF]: [Pr. PC27]	
					The mounting direction is correct.	Check (3).	
		(3)	The connection of the servo motor is incorrect.	Check the wiring.	The wiring is incorrect.	Connect it correctly.	
					The wiring is correct.	Check (4).	
		(4)	The initial magnetic pole detection was not executed.	Execute the magnetic pole detection, and then check the repeatability.	It is not repeatable.	Execute the magnetic pole detection.	
					It is repeatable.	Check (5).	
		(5)	The torque/thrust deviation exceeded the detection level.	Calculate the deviation between the current command and torque/ thrust.	The deviation is large.	Review the operation status. Review the [Pr. PL07] setting depending on circumstances.	

Alarm No.: 42		Name: Fully closed loop control error detection (during fully closed loop control)					
Alarm content		· A fully closed loop control error has occurred.					
Detail No.	Detail name	Cause		Check method	Check result	Action	Target
42.8	Fully closed loop control error by position deviation	(1)	The resolution of the load-side encoder setting differs from the setting value.	Check the setting of [Pr. PE04] and [Pr. PE05].	The setting is incorrect.	Set it correctly.	[A] [B] [WB] [GF]
					The setting is correct.	Check (2).	
		(2)	The direction of mounting load-side encoder is incorrect.	Check the mounting direction of the load-side encoder.	The mounting direction is incorrect.	Mount it correctly. Review the "encoder pulse count polarity selection" setting of the parameter as required. [A]: [Pr. PC45] [B] [WB] [GF]: [Pr. PC27]	
					The mounting direction is correct.	Check (3).	
		(3)	The position deviation exceeded the detection level.	Check the value of droop pulses.	The deviation is large.	Review the operation status. Review the [Pr. PE07] setting depending on circumstances.	
42.9	Fully closed loop control error by speed deviation	(1)	The resolution of the load-side encoder setting differs from the setting value.	Check the setting of [Pr. PE04] and [Pr. PE05].	The setting is incorrect.	Set it correctly.	
					The setting is correct.	Check (2).	
		(2)	The direction of mounting load-side encoder is incorrect.	Check the mounting direction of the load-side encoder.	The mounting direction is incorrect.	Mount it correctly. Review the "encoder pulse count polarity selection" setting of the parameter as required. [A]: [Pr. PC45] [B] [WB] [GF]: [Pr. PC27]	
					The mounting direction is correct.	Check (3).	
		(3)	The speed deviation exceeded the detection level.	Calculate the deviation between the speed command and actual speed.	The deviation is large.	Review the operation status. Review the [Pr. PE06] setting depending on circumstances.	
42.A	Fully closed loop control error by position deviation during command stop	Check it with the check method for [AL. 42.8].					

Alarm No.: 45		Name: Main circuit device overheat					
Alarm content		· Inside of the servo amplifier overheated.					
Detail No.	Detail name	Cause		Check method	Check result	Action	Target
45.1	Main circuit device overheat error 1	(1)	Ambient temperature has exceeded 55 ℃.	Check the ambient temperature.	It is over 55 ℃.	Lower the ambient temperature.	[A] [B] [WB] [RJ010] [GF]
					It is less than 55 ℃.	Check (2).	
		(2)	The close mounting is out of specifications.	Check the specifications of close mounting.	It is out of specifications.	Use within the range of specifications.	
					It is within specifications.	Check (3).	
		(3)	Turning on and off were repeated under the overload status.	Check if the overload status occurred many times.	It occurred.	Check operation pattern.	
					It did not occur.	Check (4).	
		(4)	A cooling fan, heat sink, or openings is clogged with foreign matter.	Clean the cooling fan, heat sink, or openings, and then check the repeatability.	It is not repeatable.	Clean it periodically.	
					It is repeatable.	Check (5).	
		(5)	The servo amplifier is malfunctioning.	Replace the servo amplifier, and then check the repeatability.	It is not repeatable.	Replace the servo amplifier.	
45.2	Main circuit device overheat error 2	(1)	Check it with the check method for [AL. 45.1].				

Alarm No.: 46		Name: Servo motor overheat					
Alarm content		· The servo motor overheated.					
Detail No.	Detail name	Cause		Check method	Check result	Action	Target
46.1	Abnormal temperature of servo motor 1	(1)	Ambient temperature of the servo motor has exceeded 40 ℃.	Check the ambient temperature of the servo motor.	It is over 40 ℃.	Lower the ambient temperature.	[A] [B] [WB] [RJ010] [GF]
					It is less than 40 ℃.	Check (2).	
		(2)	Servo motor is overloaded.	Check the effective load ratio.	The effective load ratio is high.	Reduce the load or review the operation pattern.	
					The effective load ratio is small.	Check (3).	
		(3)	The thermal sensor in the encoder is malfunctioning.	Check the servo motor temperature when the alarm occurs.	The servo motor temperature is low.	Replace the servo motor.	

Alarm No.: 46	Name: Servo motor overheat						
Alarm content	The servo motor overheated.						
Detail No.	Detail name	Cause		Check method	Check result	Action	Target
46.2	Abnormal temperature of servo motor 2	(1)	Ambient temperature of the linear servo motor or direct drive motor has exceeded 40 ℃.	Check the ambient temperature of the linear servo motor or direct drive motor.	It is over 40 ℃.	Lower the ambient temperature.	[A] [B] [WB] [GF]
					It is less than 40 ℃.	Check (2).	
		(2)	The linear servo motor or direct drive motor has been under overload status.	Check the effective load ratio.	The effective load ratio is high.	Reduce the load or review the operation pattern.	
					The effective load ratio is small.	Replace the servo motor.	
46.3	Thermistor disconnected error	(1)	In the parallel drive system, the parameter settings and the axis number settings are incorrect.	Check the settings of [Pr. PF37 Parallel drive - Encoder ID setting 1]. Check if the setting of [Pr. PF40 Parallel drive - Servo motor side system setting] matches the setting of the axis number set with the combination of SW2-3, SW2-4, and SW1.	It is not set correctly.	Set the parameter and the axis number correctly.	
					It is set correctly.	Check (2).	
		(2)	In the parallel drive system, the encoder cable from the servo motor is not connected to the encoder master servo amplifier.	Check if the encoder cable from the servo motor is connected to the encoder master servo amplifier.	It is not connected.	Connect the encoder cable of the servo motor to the encoder master servo amplifier. Connect the encoder master servo amplifier and the encoder slave servo amplifier in the order of the axis number.	
					It is connected.	Check (3).	
		(3)	A thermistor wire is not connected.	Check the thermistor wire.	It is not connected.	Connect it correctly.	
					It is connected.	Check (4).	
		(4)	The encoder cable MR-ENECBL_M-H for HF-JP series servo motors is used for the HG-JR22K1M(4) servo motor.	Check the model of the encoder cable.	MR-ENECBL_M-H is used.	Change it to MR-ENECBL_M-H-MTH.	
					MR-ENECBL_M-H-MTH is used.	Check (5).	
		(5)	The thermistor wire is disconnected.	Check the thermistor wire.	It is disconnected.	Repair the lead wire.	
					It is not disconnected.	Replace the servo motor.	
46.4	Thermistor circuit error	(1)	A thermistor circuit of the servo amplifier is malfunctioning.	Replace the servo amplifier, and then check the repeatability.	It is not repeatable.	Replace the servo amplifier.	[A] [B] [WB] [GF]
46.5	Abnormal temperature of servo motor 3	Check it with the check method for [AL. 46.1].					
46.6	Abnormal temperature of servo motor 4	(1)	A current was applied to the servo amplifier in excess of its continuous output current.	Check the effective load ratio.	The effective load ratio is high.	Reduce the load or review the operation pattern. Or use a larger capacity motor.	[A] [B] [WB] [RJ010] [GF]

Alarm No.: 47		Name: Cooling fan error					
Alarm content		· The speed of the servo amplifier cooling fan decreased. · Or the fan speed decreased to the alarm occurrence level or less.					
Detail No.	Detail name	Cause		Check method	Check result	Action	Target
47.1	Cooling fan stop error	(1)	Foreign matter was caught in the cooling fan.	Check if a foreign matter is caught in the cooling fan.	Something has been caught.	Remove the foreign matter.	[A] [B] [WB] [RJ010] [GF]
					Nothing has been caught.	Check (2).	
		(2)	Cooling fan life expired.	Check if the cooling fan is stopping.	It is stopping.	Replace the servo amplifier.	
47.2	Cooling fan speed reduction error	(1)	Foreign matter was caught in the cooling fan.	Check if a foreign matter is caught in the cooling fan.	Something has been caught.	Remove the foreign matter.	
					Nothing has been caught.	Check (2).	
		(2)	Cooling fan life expired.	Check the cooling fan speed.	The fan speed is less than the alarm occurrence level.	Replace the servo amplifier.	

Alarm No.: 50		Name: Overload 1					
Alarm content		Load exceeded overload protection characteristic of servo amplifier.					
Detail No.	Detail name	Cause		Check method	Check result	Action	Target
50.1	Thermal overload error 1 during operation	(1)	The servo motor power cable was disconnected.	Check the servo motor power cable.	It is disconnected.	Repair or replace the servo motor power cable.	[A] [B] [WB] [RJ010] [GF]
					It is not disconnected.	Check (2).	
		(2)	The connection of the servo motor is incorrect.	Check the wiring of U/V/W.	It is incorrect.	Connect it correctly.	
					It is correct.	Check (3).	
		(3)	The electromagnetic brake has not released. (The electromagnetic brake has been activated.)	Check if the electromagnetic brake is released during operation.	It is not released.	Release the electromagnetic brake.	
					It is released.	Check (4).	
		(4)	The direction of mounting linear encoder is incorrect.	Check polarities of the linear encoder and the linear servo motor.	The mounting direction is incorrect.	Mount it correctly. Review the "encoder pulse count polarity selection" setting of the parameter as required. [A]: [Pr. PC45] [B] [WB] [GF]: [Pr. PC27]	[A] [B] [WB] [GF]
					The mounting direction is correct.	Check (5).	
		(5)	A current was applied to the servo amplifier in excess of its continuous output current.	Check the effective load ratio.	The effective load ratio is high.	Reduce the load. Or use a larger capacity motor.	[A] [B] [WB] [RJ010] [GF]
					The effective load ratio is small.	Check (6).	
		(6)	The connection destination of the encoder cable is incorrect.	Check the connection destinations of CN2A, CN2B, and CN2C.	It is not correct.	Connect it correctly.	[WB]
					It is correct.	Check (7).	
		(7)	The servo system is unstable and resonating.	Check if it is resonating.	It is resonating.	Adjust gains. For MR-J4-03A6(-RJ) and MR-J4W2-0303B6, check if the main circuit power supply voltage is 48 V DC even though the setting is 24 V DC.	[A] [B] [WB] [RJ010] [GF]
					It is not resonating.	Check (8).	
		(8)	The servo amplifier is malfunctioning.	Replace the servo amplifier, and then check the repeatability.	It is not repeatable.	Replace the servo amplifier.	
					It is repeatable.	Check (9).	
		(9)	The encoder or linear encoder is malfunctioning.	Replace the servo motor or linear encoder, and then check the repeatability.	It is not repeatable.	Replace the servo motor or linear encoder.	
50.2	Thermal overload error 2 during operation	Check it with the check method for [AL. 50.1].					
50.3	Thermal overload error 4 during operation						

Alarm No.: 50		Name: Overload 1					
Alarm content		· Load exceeded overload protection characteristic of servo amplifier.					
Detail No.	Detail name	Cause		Check method	Check result	Action	Target
50.4	Thermal overload error 1 during a stop	(1)	A moving part collided against the machine.	Check if it collided.	It collided.	Check operation pattern.	[A] [B] [WB] [RJ010] [GF]
					It did not collide.	Check (2).	
		(2)	The servo motor power cable was disconnected.	Check the servo motor power cable.	It is disconnected.	Repair or replace the servo motor power cable.	
					It is not disconnected.	Check (3).	
		(3)	Hunting occurs during servo-lock.	Check if the hunting is occurring.	The hunting is occurring.	Adjust gains.	
					The hunting is not occurring.	Check (4).	
		(4)	The electromagnetic brake has not released. (The electromagnetic brake has been activated.)	Check if the electromagnetic brake is released.	It is not released.	Release the electromagnetic brake.	
					It is released.	Check (5).	
		(5)	The direction of mounting linear encoder is incorrect.	Check polarities of the linear encoder and the linear servo motor.	The mounting direction is incorrect.	Mount it correctly. Review the "encoder pulse count polarity selection" setting of the parameter as required. [A]: [Pr. PC45] [B] [WB] [GF]: [Pr. PC27]	[A] [B] [WB] [GF]
					The mounting direction is correct.	Check (6).	
		(6)	A current was applied to the servo amplifier in excess of its continuous output current.	Check the effective load ratio.	The effective load ratio is high.	Reduce the load. Or use a larger capacity motor.	[A] [B] [WB] [RJ010] [GF]
					The effective load ratio is small.	Check (7).	
		(7)	The connection destination of the encoder cable is incorrect.	Check the connection destinations of CN2A, CN2B, and CN2C.	It is not correct.	Connect it correctly.	[WB]
					It is correct.	Check (8).	
		(8)	The servo system is unstable and resonating.	Check if it is resonating.	It is resonating.	Adjust gains.	[A] [B] [WB] [RJ010] [GF]
					It is not resonating.	Check (9).	
		(9)	The servo amplifier is malfunctioning.	Replace the servo amplifier, and then check the repeatability.	It is not repeatable.	Replace the servo amplifier.	
					It is repeatable.	Check (10).	
		(10)	The encoder, servo motor, or linear encoder is malfunctioning.	Replace the servo motor or linear encoder, and then check the repeatability.	It is not repeatable.	Replace the servo motor or linear encoder.	
50.5	Thermal overload error 2 during a stop	Check it with the check method for [AL. 50.4].					
50.6	Thermal overload error 4 during a stop						

Alarm No.: 51		Name: Overload 2					
Alarm content		· Maximum output current flowed continuously due to machine collision or the like.					
Detail No.	Detail name	Cause		Check method	Check result	Action	Target
51.1	Thermal overload error 3 during operation	(1)	The servo motor power cable was disconnected.	Check the servo motor power cable.	It is disconnected.	Repair or replace the servo motor power cable.	[A] [B] [WB] [RJ010] [GF]
					It is not disconnected.	Check (2).	
		(2)	The connection of the servo motor is incorrect.	Check the wiring of U/V/W.	It is incorrect.	Connect it correctly.	
					It is correct.	Check (3).	
		(3)	The connection of the encoder cable is incorrect.	Check if the encoder cable is connected correctly.	It is incorrect.	Connect it correctly.	
					It is correct.	Check (4).	
		(4)	The direction of mounting linear encoder is incorrect.	Check polarities of the linear encoder and the linear servo motor.	The mounting direction is incorrect.	Mount it correctly. Review the "encoder pulse count polarity selection" setting of the parameter as required. [A]: [Pr. PC45] [B] [WB] [GF]: [Pr. PC27]	[A] [B] [WB] [GF]
					The mounting direction is correct.	Check (5).	
		(5)	The torque is insufficient.	Check the peak load ratio.	The torque is saturated.	Reduce the load or review the operation pattern. Or use a larger capacity motor.	[A] [B] [WB] [RJ010] [GF]
					The torque is not saturated.	Check (6).	
		(6)	The servo amplifier is malfunctioning.	Replace the servo amplifier, and then check the repeatability.	It is not repeatable.	Replace the servo amplifier.	
					It is repeatable.	Check (7).	
		(7)	An encoder or servo motor is malfunctioning.	Replace the servo motor, and then check the repeatability.	It is not repeatable.	Replace the servo motor.	
51.2	Thermal overload error 3 during a stop	(1)	A moving part collided against the machine.	Check if it collided.	It collided.	Check operation pattern.	
					It did not collide.	Refer to (2).	
		(2)	The servo motor power cable was disconnected.	Check it with the check method for [AL. 51.1].			
		(3)	The connection of the servo motor is incorrect.				
		(4)	The connection of the encoder cable is incorrect.				
		(5)	The direction of mounting linear encoder is incorrect.				
		(6)	The torque is saturated.				
		(7)	The servo amplifier is malfunctioning.				
		(8)	An encoder is malfunctioning.				

Alarm No.: 52		Name: Error excessive					
Alarm content		· Droop pulses have exceeded the alarm occurrence level.					
Detail No.	Detail name	Cause		Check method	Check result	Action	Target
52.1	Excess droop pulse 1	(1)	The servo motor power cable was disconnected.	Check the servo motor power cable.	It is disconnected.	Repair or replace the servo motor power cable.	[A] [B] [WB] [RJ010] [GF]
					It is not disconnected.	Check (2).	
		(2)	The connection of the servo motor is incorrect.	Check the wiring of U/V/W.	It is incorrect.	Connect it correctly.	
					It is correct.	Check (3).	
		(3)	The connection of the encoder cable is incorrect.	Check if the encoder cable is connected correctly.	It is incorrect.	Connect it correctly.	
					It is correct.	Check (4).	
		(4)	The torque limit has been enabled.	Check if the limiting torque is in progress.	The limiting torque is in progress.	Increase the torque limit value.	
					The limiting torque is not in progress.	Check (5).	
		(5)	A moving part collided against the machine.	Check if it collided.	It collided.	Check operation pattern.	
					It did not collide.	Check (6).	
		(6)	The electromagnetic brake has not released. (The electromagnetic brake has been activated.)	Check if electromagnetic brake is released.	It is not released.	Release the electromagnetic brake.	
					It is released.	Check (7).	
		(7)	The torque is insufficient.	Check the peak load ratio.	The torque is saturated.	Reduce the load or review the operation pattern. Or use a larger capacity motor.	
					The torque is not saturated.	Check (8).	
		(8)	Power supply voltage dropped.	Check the bus voltage value.	The bus voltage is low.	Check the power supply voltage and power supply capacity.	
					The bus voltage is high.	Check (9).	
		(9)	Acceleration/ deceleration time constant is too short.	Set a longer deceleration time constant, and then check the repeatability.	It is not repeatable.	Increase the acceleration/deceleration time constant.	
					It is repeatable.	Check (10).	
		(10)	The position loop gain is small.	Increase the position loop gain, and then check the repeatability.	It is not repeatable.	Increase the position loop gain ([Pr. PB08]).	
					It is repeatable.	Check (11).	
		(11)	The error excessive alarm level was not set correctly.	Check the setting of the error excessive alarm level. [A]: [Pr. PC24], [Pr. PC43] [B] [WB] [RJ010] [GF]: [Pr. PC01], [Pr. PC06]	It is not set correctly.	Set it correctly.	
					It is set correctly.	Check (12).	
		(12)	Servo motor shaft was rotated by external force./ The moving part of the linear servo motor was moved by external force.	Measure the actual position under the servo-lock status.	It is rotated by external force./ It was moved by external force.	Review the machine.	
					It is not rotated by external force./ It was not moved by external force.	Check (13).	
		(13)	The encoder or the servo motor is malfunctioning.	Replace the servo motor, and then check the repeatability.	It is not repeatable.	Replace the servo motor.	
					It is repeatable.	Check (14).	
		(14)	The servo amplifier is malfunctioning.	Replace the servo amplifier, and then check the repeatability.	It is not repeatable.	Replace the servo amplifier.	
52.3	Excess droop pulse 2	Check it with the check method for [AL. 52.1].					

Alarm No.: 52	Name: Error excessive						
Alarm content	· Droop pulses have exceeded the alarm occurrence level.						
Detail No.	Detail name	Cause		Check method	Check result	Action	Target
52.4	Error excessive during 0 torque limit	(1)	The torque limit has been 0.	Check the torque limit value.	The torque limit has been 0.	Do not input a command while the torque limit value is 0.	[A] [B] [WB] [RJ010] [GF]
52.5	Excess droop pulse 3	Check it with the check method for [AL. 52.1].					

Alarm No.: 54	Name: Oscillation detection						
Alarm content	· An oscillation of the servo motor was detected.						
Detail No.	Detail name	Cause		Check method	Check result	Action	Target
54.1	Oscillation detection error	(1)	The servo system is unstable and oscillating.	Check if the servo motor is oscillating. Check the torque ripple with MR Configurator2.	The torque ripple is vibrating.	Adjust the servo gain with the auto tuning. Set the machine resonance suppression filter.	[A] [B] [WB] [RJ010] [GF]
					The torque ripple is not vibrating.	Check (2).	
		(2)	The resonance frequency has changed due to deterioration.	Measure the resonance frequency of the equipment and compare it with the setting value of the machine resonance suppression filter.	The resonance frequency of the equipment is different from the filter setting value.	Change the setting value of the machine resonance suppression filter.	
					The resonance frequency of the equipment is the same as the filter setting value.	Check (3).	
		(3)	The encoder or linear encoder is malfunctioning.	Replace the servo motor or linear encoder, and then check the repeatability.	It is not repeatable.	Replace the servo motor or linear encoder.	

Alarm No.: 56		Name: Forced stop error					
Alarm content		· The servo motor does not decelerate normally during forced stop deceleration.					
Detail No.	Detail name	Cause		Check method	Check result	Action	Target
56.2	Over speed during forced stop	(1)	The forced stop deceleration time constant is short. [A]: [Pr. PC51] [B] [WB] [RJ010] [GF]: [Pr. PC24]	Increase the parameter setting value, and then check the repeatability.	It is not repeatable.	Adjust the deceleration time constant.	[A] [B] [WB] [RJ010] [GF]
					It is repeatable.	Check (2).	
		(2)	The torque limit has been enabled.	Check if the limiting torque is in progress.	The limiting torque is in progress.	Review the torque limit value.	
					The limiting torque is not in progress.	Check (3).	
		(3)	The servo system is unstable and oscillating.	Check if the servo motor is oscillating. Check the torque ripple with MR Configurator2.	The torque ripple is vibrating.	Adjust the servo gain. Set the machine resonance suppression filter.	
					The torque ripple is not vibrating.	Check (4).	
		(4)	The encoder or linear encoder is malfunctioning.	Replace the servo motor or linear encoder, and then check the repeatability.	It is not repeatable.	Replace the servo motor or linear encoder.	
56.3	Estimated distance over during forced stop	(1)	The forced stop deceleration time constant is short. [A]: [Pr. PC51] [B] [WB] [RJ010] [GF]: [Pr. PC24]	Increase the parameter setting value, and then check the repeatability.	It is not repeatable.	Adjust the deceleration time constant.	
					It is repeatable.	Check (2).	
		(2)	The torque limit has been enabled.	Check if the limiting torque is in progress.	The limiting torque is in progress.	Review the torque limit value.	
					The limiting torque is not in progress.	Check (3).	
		(3)	The encoder or linear encoder is malfunctioning.	Replace the servo motor or linear encoder, and then check the repeatability.	It is not repeatable.	Replace the servo motor or linear encoder.	
56.4	Forced stop start error	(1)	The SSCNET III cable is disconnected.	Check if the SSCNET III cable is connected correctly.	It is not connected.	Connect it correctly.	[B]
					It is connected.	Check (2).	
		(2)	The SSCNET III cable is malfunctioning.	Check if the SSCNET III cable is disconnected or shorted.	It has a failure.	Replace or repair the cable.	
					It has no failure.	Check (3).	
		(3)	Something near the device caused it.	Check the noise, ambient temperature, vibration, etc.	There is a problem in the surrounding.	Take countermeasures against its cause.	
					There is no problem in the surrounding.	Check (4).	
		(4)	The servo amplifier is malfunctioning.	Replace the servo amplifier, and then check the repeatability.	It is not repeatable.	Replace the servo amplifier.	
					It is repeatable.	Check (5).	
		(5)	The controller is malfunctioning.	Replace the controller, and then check the repeatability.	It is not repeatable.	Replace the controller.	

Alarm No.: 61	Name: Operation error						
Alarm content	· An operation of the positioning function failed.						
Detail No.	Detail name	Cause		Check method	Check result	Action	Target
61.1	Point table setting range error	(1)	"1" or "3" was set to the sub function of the last point table (255).	Check if "1" or "3" was set.	It was set.	Review the settings.	[A] [GF]

Alarm No.: 63	Name: STO timing error						
Alarm content	· STO input signal turns off while the servo motor is rotating.						
Detail No.	Detail name	Cause		Check method	Check result	Action	Target
63.1	STO1 off	(1)	STO1 was turned off (enabled) under the following speed conditions. 1) Servo motor speed: 50 r/min or more 2) Linear servo motor speed: 50 mm/s or more 3) Direct drive motor speed: 5 r/min or more	Check if STO1 is off (enabled).	It is off (enabled).	Turn on STO1 (disabled).	[A] [B] [WB] [RJ010] [GF]
63.2	STO2 off	(1)	STO2 was turned off (enabled) under the following speed conditions. 1) Servo motor speed: 50 r/min or more 2) Linear servo motor speed: 50 mm/s or more 3) Direct drive motor speed: 5 r/min or more	Check if STO2 is off (enabled).	It is off (enabled).	Turn on STO2 (disabled).	
63.5	STO by functional safety unit	(1)	STO of the functional safety unit was turned off (enabled) under the following speed conditions. 1) Servo motor speed: 50 r/min or more 2) Linear servo motor speed: 50 mm/s or more 3) Direct drive motor speed: 5 r/min or more	Check if STO of the functional safety unit is off (enabled).	It is off (enabled).	Turn on STO (disabled).	[A] [B] [GF]

Alarm No.: 64	Name: Functional safety unit setting error						
Alarm content	· A setting of the servo amplifier or functional safety unit was incorrect.						
Detail No.	Detail name	Cause		Check method	Check result	Action	Target
64.1	STO input error	(1)	When a functional safety unit is used, a connector is connected to CN8 of the servo amplifier.	Check the connection of the CN8 connector.	It is connected.	Turn off the control circuit power supply of the servo amplifier, and then remove the connector of CN8.	[A] [B] [GF]
64.2	Compatibility mode setting error	(1)	When a functional safety unit is used, the J3 compatibility mode is set.	Check the parameter setting.	The J3 compatibility mode is set.	The J3 compatibility mode is not supported with the functional safety unit. Set it correctly.	[B]

Alarm No.: 64		Name: Functional safety unit setting error					
Alarm content		· A setting of the servo amplifier or functional safety unit was incorrect.					
Detail No.	Detail name	Cause		Check method	Check result	Action	Target
64.3	Operation mode setting error	(1)	The speed observation function turned to be enabled in the fully closed loop control mode, linear servo motor control mode, or DD motor control mode.	Check if the parameter setting is correct.	The setting is incorrect.	Set it correctly.	[A] [B] [GF]

Alarm No.: 65		Name: Functional safety unit connection error					
Alarm content		· Communication or signal between a functional safety unit and servo amplifier failed.					
Detail No.	Detail name	Cause		Check method	Check result	Action	Target
65.1	Functional safety unit communication error 1	(1)	The functional safety unit came off.	Check the installation of the functional safety unit.	It is disconnected.	Turn off the control circuit power supply of the servo amplifier, and then connect the functional safety unit.	[A] [B] [GF]
					It is connected.	Check (2).	
		(2)	The functional safety unit is malfunctioning.	Replace the functional safety unit, and then check the repeatability.	It is not repeatable.	Replace the functional safety unit.	
					It is repeatable.	Check (3).	
		(3)	The servo amplifier is malfunctioning.	Replace the servo amplifier, and then check the repeatability.	It is not repeatable.	Replace the servo amplifier.	
					It is repeatable.	Check (4).	
		(4)	Something near the device caused it.	Check the noise, ambient temperature, etc.	There is a problem in the surrounding.	Take countermeasures against its cause.	
65.2	Functional safety unit communication error 2	Check it with the check method for [AL. 65.1].					
65.3	Functional safety unit communication error 3						
65.4	Functional safety unit communication error 4						
65.5	Functional safety unit communication error 5						
65.6	Functional safety unit communication error 6						
65.7	Functional safety unit communication error 7						
65.8	Functional safety unit shut-off signal error 1						
65.9	Functional safety unit shut-off signal error 2						

Alarm No.: 66	Name: Encoder initial communication error (safety observation function)						
Alarm content	· The connected encoder is not compatible with the servo amplifier. · An error has occurred in the communication between an encoder and servo amplifier.						
Detail No.	Detail name	Cause		Check method	Check result	Action	Target
66.1	Encoder initial communication - Receive data error 1 (safety observation function)	(1)	An encoder cable is malfunctioning.	Check if the encoder cable is disconnected or shorted.	It has a failure.	Replace or repair the cable.	[A] [B] [GF]
					It has no failure.	Check (2).	
		(2)	The servo amplifier is malfunctioning.	Replace the servo amplifier, and then check the repeatability.	It is not repeatable.	Replace the servo amplifier.	
					It is repeatable.	Check (3).	
		(3)	An encoder is malfunctioning.	Replace the servo motor, and then check the repeatability.	It is not repeatable.	Replace the servo motor.	
					It is repeatable.	Check (4).	
		(4)	Something near the device caused it.	Check the noise, ambient temperature, vibration, etc.	There is a problem in the surrounding.	Take countermeasures against its cause.	
66.2	Encoder initial communication - Receive data error 2 (safety observation function)	Check it with the check method for [AL. 66.1].					
66.3	Encoder initial communication - Receive data error 3 (safety observation function)						
66.7	Encoder initial communication - Transmission data error 1 (safety observation function)						
66.9	Encoder initial communication - Process error 1 (safety observation function)	(1)	A servo motor with functional safety is not connected.	Check if a servo motor with functional safety is connected.	It is not a servo motor with functional safety.	Connect a servo motor with functional safety.	[A] [B] [GF]
					It is a servo motor with functional safety.	Check (2).	
		(2)	The functional safety unit is malfunctioning.	Replace the functional safety unit, and then check the repeatability.	It is not repeatable.	Replace the functional safety unit.	
					It is repeatable.	Check (3).	
		(3)	The servo amplifier is malfunctioning.	Replace the servo amplifier, and then check the repeatability.	It is not repeatable.	Replace the servo amplifier.	
					It is repeatable.	Check (4).	
		(4)	An encoder is malfunctioning.	Replace the servo motor, and then check the repeatability.	It is not repeatable.	Replace the servo motor.	
					It is repeatable.	Check (5).	
		(5)	Something near the device caused it.	Check the noise, ambient temperature, etc.	There is a problem in the surrounding.	Take countermeasures against its cause.	

Alarm No.: 67		Name: Encoder normal communication error 1 (safety observation function)					
Alarm content		· An error has occurred in the communication between an encoder and servo amplifier.					
Detail No.	Detail name	Cause		Check method	Check result	Action	Target
67.1	Encoder normal communication - Receive data error 1 (safety observation function)	(1)	An encoder cable is malfunctioning.	Check if the encoder cable is disconnected or shorted.	It has a failure.	Repair or replace the cable.	[A] [B] [GF]
					It has no failure.	Check (2).	
		(2)	The servo amplifier is malfunctioning.	Replace the servo amplifier, and then check the repeatability.	It is not repeatable.	Replace the servo amplifier.	
					It is repeatable.	Check (3).	
		(3)	An encoder is malfunctioning.	Replace the servo motor, and then check the repeatability.	It is not repeatable.	Replace the servo motor.	
					It is repeatable.	Check (4).	
		(4)	Something near the device caused it.	Check the noise, ambient temperature, vibration, etc.	There is a problem in the surrounding.	Take countermeasures against its cause.	
67.2	Encoder normal communication - Receive data error 2 (safety observation function)	Check it with the check method for [AL. 67.1].					
67.3	Encoder normal communication - Receive data error 3 (safety observation function)						
67.4	Encoder normal communication - Receive data error 4 (safety observation function)						
67.7	Encoder normal communication - Transmission data error 1 (safety observation function)						

Alarm No.: 68		Name: STO diagnosis error					
Alarm content		· An error of STO input signal was detected.					
Detail No.	Detail name	Cause		Check method	Check result	Action	Target
68.1	Mismatched STO signal error	(1)	STO1 and STO2 are not inputted correctly.	Check if the STO1 and STO2 of CN8 connector are wired correctly.	It is not wired correctly.	Wire it correctly.	[A] [B] [WB] [GF]
					It is wired correctly.	Check (2).	
		(2)	The input states of STO1 and STO2 are different.	Check the on/off states of STO1 and STO2.	The on/off states of STO1 and STO2 are different.	Set STO1 and STO2 to the same input states.	
					The on/off states of STO1 and STO2 are the same.	Check (3).	
		(3)	The setting of [Pr. PF18 STO diagnosis error detection time] ([Pr. PX43] for when the J3 extension function is used) is incorrect.	Set a longer time in the parameter, and then check the repeatability.	It is not repeatable.	Review the parameter setting.	
					It is repeatable.	Check (4).	
		(4)	The STO circuit is malfunctioning.	Replace the servo amplifier, and then check the repeatability.	It is not repeatable.	Replace the servo amplifier.	
					It is repeatable.	Check (5).	
		(5)	Something near the device caused it.	Check the noise, ambient temperature, etc.	There is a problem in the surrounding.	Take countermeasures against its cause.	

Alarm No.: 69		Name: Command error					
Alarm content		· The command position exceeded 32 bits (-2147483648 to 2147483647) when the software limit is activated. · The command position exceeded 30 bits (-536870912 to 536870911) from the value that was set when the software limit was activated. · After the detection of LSP (Forward rotation stroke end) or LSN (Reverse rotation stroke end), the command position exceeded 30 bits (-536870912 to 536870911) from the detected position. · After the detection of FLS (Upper stroke limit) or RLS (Lower stroke limit), the command position exceeded 30 bits (-536870912 to 536870911) from the detected position.					
Detail No.	Detail name	Cause		Check method	Check result	Action	Target
69.1	Forward rotation-side software limit detection - Command excess error	(1)	The command position exceeded 32 bits when the software limit is activated.	Check if the command position is correct.	The command position was set to 32 bits or more.	Set the command position correctly.	[GF]
					The command position was set correctly.	Check (2).	
		(2)	The command position exceeded 30 bits from the value that was set when the software limit was activated.	Check if the parameter settings of the software limit ([Pr. PT15] to [Pr. PT18]) to the command position are correct.	It was set within the command position.	Set [Pr. PT15] to [Pr. PT18] correctly.	
					It was set correctly.	Check (3).	
		(3)	The controller is malfunctioning.	Replace the controller, and then check the repeatability.	It is not repeatable.	Replace the controller.	
					It is repeatable.	Check (4).	
		(4)	Something near the device caused it.	Check the noise, ambient temperature, etc.	There is a problem in the surrounding.	Take countermeasures against its cause.	
69.2	Reverse rotation-side software limit detection - Command excess error	Check it with the check method for [AL. 69.1].					

Alarm No.: 69		Name: Command error					
Alarm content		· The command position exceeded 32 bits (-2147483648 to 2147483647) when the software limit is activated. · The command position exceeded 30 bits (-536870912 to 536870911) from the value that was set when the software limit was activated. · After the detection of LSP (Forward rotation stroke end) or LSN (Reverse rotation stroke end), the command position exceeded 30 bits (-536870912 to 536870911) from the detected position. · After the detection of FLS (Upper stroke limit) or RLS (Lower stroke limit), the command position exceeded 30 bits (-536870912 to 536870911) from the detected position.					
Detail No.	Detail name	Cause		Check method	Check result	Action	Target
69.3	Forward rotation stroke end detection - Command excess error	(1)	The command position exceeded 30 bits from the detected position after the detection of LSP (Forward rotation stroke end).	Check the command position.	The command position was set to 30 bits or more.	Check operation pattern.	[GF]
					It was set correctly.	Check (2).	
		(2)	The forward rotation stroke limit switch is not connected to LSP (Forward rotation stroke end).	Check if the limit switch is connected correctly.	It is not connected.	Connect it correctly.	
					It is connected.	Check (3).	
		(3)	The controller is malfunctioning.	Replace the controller, and then check the repeatability.	It is not repeatable.	Replace the controller.	
					It is repeatable.	Check (4).	
		(4)	Something near the device caused it.	Check the noise, ambient temperature, etc.	There is a problem in the surrounding.	Take countermeasures against its cause.	
69.4	Reverse rotation stroke end detection - Command excess error	(1)	The command position exceeded 30 bits from the detected position after the detection of LSN (Reverse rotation stroke end).	Check the command position.	The command position was set to 30 bits or more.	Check operation pattern.	
					It was set correctly.	Check (2).	
		(2)	The reverse rotation stroke limit switch is not connected to LSN (Reverse rotation stroke end).	Check if the limit switch is connected correctly.	It is not connected.	Connect it correctly.	
					It is connected.	Check (3).	
		(3)	The controller is malfunctioning.	Replace the controller, and then check the repeatability.	It is not repeatable.	Replace the controller.	
					It is repeatable.	Check (4).	
		(4)	Something near the device caused it.	Check the noise, ambient temperature, etc.	There is a problem in the surrounding.	Take countermeasures against its cause.	
69.5	Upper stroke limit detection - Command excess error	(1)	The command position exceeded 30 bits from the detected position after the detection of FLS (Upper stroke limit).	Check the command position.	The command position was set to 30 bits or more.	Check operation pattern.	
					It was set correctly.	Check (2).	
		(2)	The upper stroke limit switch is not wired. Or the switch is incorrectly positioned.	Check if the limit switch is wired correctly. Or check if the switch is incorrectly positioned.	It has a failure.	Take countermeasures against its cause.	
					It has no failure.	Check (3).	
		(3)	Something near the device caused it.	Check the noise, ambient temperature, etc.	There is a problem in the surrounding.	Take countermeasures against its cause.	
					There is no problem in the surrounding.	Check (4).	
		(4)	The controller is malfunctioning.	Replace the controller, and then check the repeatability.	It is not repeatable.	Replace the controller.	

Alarm No.: 69		Name: Command error					
Alarm content		· The command position exceeded 32 bits (-2147483648 to 2147483647) when the software limit is activated. · The command position exceeded 30 bits (-536870912 to 536870911) from the value that was set when the software limit was activated. · After the detection of LSP (Forward rotation stroke end) or LSN (Reverse rotation stroke end), the command position exceeded 30 bits (-536870912 to 536870911) from the detected position. · After the detection of FLS (Upper stroke limit) or RLS (Lower stroke limit), the command position exceeded 30 bits (-536870912 to 536870911) from the detected position.					
Detail No.	Detail name	Cause		Check method	Check result	Action	Target
69.6	Lower stroke limit detection - Command excess error	(1)	The command position exceeded 30 bits from the detected position after the detection of RLS (Lower stroke limit).	Check the command position.	The command position was set to 30 bits or more.	Check operation pattern.	[GF]
					It was set correctly.	Check (2).	
		(2)	The lower stroke limit switch is not wired. Or the switch is incorrectly positioned.	Check if the limit switch is wired correctly. Or check if the switch is incorrectly positioned.	It has a failure.	Take countermeasures against its cause.	
					It has no failure.	Check (3).	
		(3)	Something near the device caused it.	Check the noise, ambient temperature, etc.	There is a problem in the surrounding.	Take countermeasures against its cause.	
					There is no problem in the surrounding.	Check (4).	
		(4)	The controller is malfunctioning.	Replace the controller, and then check the repeatability.	It is not repeatable.	Replace the controller.	

Alarm No.: 70		Name: Load-side encoder initial communication error 1					
Alarm content		· An error occurred in the initial communication between the load-side encoder and servo amplifier.					
Detail No.	Detail name	Cause		Check method	Check result	Action	Target
70.1	Load-side encoder initial communication - Receive data error 1	(1)	A load-side encoder cable is malfunctioning.	Check if the load-side encoder cable is disconnected or shorted.	It has a failure.	Replace or repair the cable.	[A] [B] [WB] [GF]
					It has no failure.	Check (2).	
		(2)	When you use an A/B/Z-phase differential output linear encoder, the servo amplifier is not compatible with the linear encoder.	Check if the servo amplifier (MR-J4-_-RJ) is compatible with the A/B/Z-phase differential output linear encoder.	The servo amplifier is not compatible with it.	Use a servo amplifier which is compatible with it.	[A] [B] [GF]
					The servo amplifier is compatible with it.	Check (3).	
		(3)	When you use an A/B/Z-phase differential output linear encoder, the connection with the linear encoder is incorrect.	Check if the wiring of the linear encoder is correct. (Check if it is wired to PSEL.)	The wiring is incorrect.	Wire it correctly.	
					The wiring is correct.	Check (4).	
		(4)	The servo amplifier is malfunctioning.	Replace the servo amplifier, and then check the repeatability.	It is not repeatable.	Replace the servo amplifier.	[A] [B] [WB] [GF]
					It is repeatable.	Check (5).	
		(5)	A load-side encoder is malfunctioning.	Replace the load-side encoder, and then check the repeatability.	It is not repeatable.	Replace the load-side encoder.	
					It is repeatable.	Check (6).	
		(6)	Something near the device caused it.	Check the noise, ambient temperature, vibration, etc.	There is a problem in the surrounding.	Take countermeasures against its cause.	
70.2	Load-side encoder initial communication - Receive data error 2	Check it with the check method for [AL. 70.1].					

Alarm No.: 70		Name: Load-side encoder initial communication error 1					
Alarm content		· An error occurred in the initial communication between the load-side encoder and servo amplifier.					
Detail No.	Detail name	Cause		Check method	Check result	Action	Target
70.3	Load-side encoder initial communication - Receive data error 3	(1)	An axis not used is not set as disabled-axis.	Check the setting of the disabling control axis switches (SW2-2/SW2-3/SW2-4).	It is not set as disabled-axis.	Set it as disabled-axis.	[WB]
					It is set as disabled-axis.	Check (2).	
		(2)	The load-side encoder cable was disconnected.	Check if the load-side encoder cable is connected correctly.	It is not connected.	Connect it correctly.	[A] [B] [WB] [GF]
					It is connected.	Check (3).	
		(3)	A load-side encoder cable is malfunctioning.	Check if the load-side encoder cable is disconnected or shorted.	It has a failure.	Replace or repair the cable.	
					It has no failure.	Check (4).	
		(4)	The power voltage has been unstable. (For the load-side encoder with the external power supply input)	Check the power capacity and voltage.	It has a failure.	Review the power and related parts.	
					It has no failure.	Check (5).	
		(5)	The parameter setting of communication method is incorrect. [A]: [Pr. PC44] [B] [GF]: [Pr. PC26]	Check the parameter setting.	The setting is incorrect.	Set it correctly.	[A] [B] [GF]
					The setting is correct.	Check (6).	
		(6)	When you use an A/B/Z-phase differential output linear encoder, the connection with the linear encoder is incorrect.	Check if the wiring of the linear encoder is correct. (Check if it is wired to PSEL.)	The wiring is incorrect.	Wire it correctly.	
					The wiring is correct.	Check (7).	
		(7)	When you use a four-wire type linear encoder, the servo amplifier is not compatible with the four-wire type linear encoder.	Check if the servo amplifier is compatible with the four-wire type linear encoder. (MR-J4-_-RJ)	It is not compatible.	Use a servo amplifier which is compatible with it.	
					It is compatible.	Check (8).	
		(8)	The servo amplifier is malfunctioning.	Replace the servo amplifier, and then check the repeatability.	It is not repeatable.	Replace the servo amplifier.	[A] [B] [WB] [GF]
					It is repeatable.	Check (9).	
		(9)	A load-side encoder is malfunctioning.	Replace the load-side encoder, and then check the repeatability.	It is not repeatable.	Replace the load-side encoder.	
					It is repeatable.	Check (10).	
		(10)	Something near the device caused it.	Check the noise, ambient temperature, vibration, etc.	There is a problem in the surrounding.	Take countermeasures against its cause.	
70.4	Load-side encoder initial communication - Encoder malfunction	(1)	A load-side encoder is malfunctioning.	Replace the load-side encoder, and then check the repeatability.	It is not repeatable.	Replace the load-side encoder.	[B] [WB]
					It is repeatable.	Check (2).	
		(2)	Something near the device caused it.	Check the noise, ambient temperature, vibration, etc.	There is a problem in the surrounding.	Take countermeasures against its cause.	

Alarm No.: 70		Name: Load-side encoder initial communication error 1					
Alarm content		· An error occurred in the initial communication between the load-side encoder and servo amplifier.					
Detail No.	Detail name	Cause		Check method	Check result	Action	Target
70.5	Load-side encoder initial communication - Transmission data error 1	(1)	When you use an A/B/Z-phase differential output linear encoder, the wiring of the linear encoder is incorrect.	Check if the A/B-phase pulse signals (PA, PAR, PB, and PBR) of the encoder cable are disconnected or shorted.	It is disconnected or shorted.	Repair the encoder cable.	[A] [B] [GF]
					It is not disconnected or shorted.	Check (2).	
		(2)	A load-side encoder cable is malfunctioning.	Check it with the check method for [AL. 70.1].			[A] [B] [WB] [GF]
		(3)	The servo amplifier is malfunctioning.				
		(4)	A load-side encoder is malfunctioning.				
		(5)	Something near the device caused it.				
70.6	Load-side encoder initial communication - Transmission data error 2	(1)	When you use an A/B/Z-phase differential output linear encoder, the wiring of the linear encoder is incorrect.	Check if the Z-phase pulse signals (PZ/PZR) of the encoder cable are disconnected or shorted.	It is disconnected or shorted.	Repair the encoder cable.	[A] [B] [GF]
					It is not disconnected or shorted.	Check (2).	
		(2)	A load-side encoder cable is malfunctioning.	Check it with the check method for [AL. 70.1].			[A] [B] [WB] [GF]
		(3)	The servo amplifier is malfunctioning.				
		(4)	A load-side encoder is malfunctioning.				
		(5)	Something near the device caused it.				
70.7	Load-side encoder initial communication - Transmission data error 3	Check it with the check method for [AL. 70.1].					
70.8	Load-side encoder initial communication - Incompatible encoder	(1)	A load-side encoder, which is not compatible with the servo amplifier, was connected.	Check the model of the load-side encoder.	It is not compatible with the servo amplifier.	Use a load-side encoder which is compatible with the servo amplifier.	[B] [WB]
					It is compatible with the servo amplifier.	Check (2).	
		(2)	The software version of the servo amplifier does not support the load-side encoder.	Check if the software version of the servo amplifier supports the load-side encoder.	It is not compatible.	Replace the servo amplifier to one which software version supports the load-side encoder.	
					It is compatible.	Check (3).	
		(3)	A load-side encoder is malfunctioning.	Replace the load-side encoder, and then check the repeatability.	It is not repeatable.	Replace the load-side encoder.	
					It is repeatable.	Replace the servo amplifier.	
70.A	Load-side encoder initial communication - Process error 1	(1)	The servo amplifier is malfunctioning.	Replace the servo amplifier, and then check the repeatability.	It is not repeatable.	Replace the servo amplifier.	[A] [B] [WB] [GF]
					It is repeatable.	Check (2).	
		(2)	A load-side encoder is malfunctioning.	Replace the load-side encoder, and then check the repeatability.	It is not repeatable.	Replace the load-side encoder.	
					It is repeatable.	Check (3).	
		(3)	Something near the device caused it.	Check the noise, ambient temperature, vibration, etc.	There is a problem in the surrounding.	Take countermeasures against its cause.	

Alarm No.: 70		Name: Load-side encoder initial communication error 1				
Alarm content		· An error occurred in the initial communication between the load-side encoder and servo amplifier.				
Detail No.	Detail name	Cause	Check method	Check result	Action	Target
70.B	Load-side encoder initial communication - Process error 2	Check it with the check method for [AL. 70.A].				
70.C	Load-side encoder initial communication - Process error 3					
70.D	Load-side encoder initial communication - Process error 4					
70.E	Load-side encoder initial communication - Process error 5					
70.F	Load-side encoder initial communication - Process error 6					

Alarm No.: 71		Name: Load-side encoder normal communication error 1					
Alarm content		· An error occurred in the communication between the load-side encoder and servo amplifier.					
Detail No.	Detail name	Cause		Check method	Check result	Action	Target
71.1	Load-side encoder normal communication - Receive data error 1	(1)	A load-side encoder cable is malfunctioning.	Check if the load-side encoder cable is disconnected or shorted.	It has a failure.	Repair or replace the cable.	[A] [B] [WB] [GF]
					It has no failure.	Check (2).	
		(2)	The external conductor of the encoder cable is not connected to the ground plate of the connector.	Check if it is connected.	It is not connected.	Connect it correctly.	
					It is connected.	Check (3).	
		(3)	The parameter setting of communication method is incorrect. [A]: [Pr. PC44] [B] [GF]: [Pr. PC26]	Check the parameter setting.	The setting is incorrect.	Set it correctly.	[A] [B] [GF]
					The setting is correct.	Check (4).	
		(4)	The servo amplifier is malfunctioning.	Replace the servo amplifier, and then check the repeatability.	It is not repeatable.	Replace the servo amplifier.	[A] [B] [WB] [GF]
					It is repeatable.	Check (5).	
		(5)	A load-side encoder is malfunctioning.	Replace the load-side encoder, and then check the repeatability.	It is not repeatable.	Replace the load-side encoder.	
					It is repeatable.	Check (6).	
		(6)	Something near the device caused it.	Check the noise, ambient temperature, vibration, etc.	There is a problem in the surrounding.	Take countermeasures against its cause.	

Alarm No.: 71		Name: Load-side encoder normal communication error 1				
Alarm content		· An error occurred in the communication between the load-side encoder and servo amplifier.				
Detail No.	Detail name	Cause	Check method	Check result	Action	Target
71.2	Load-side encoder normal communication - Receive data error 2	Check it with the check method for [AL. 71.1].				
71.3	Load-side encoder normal communication - Receive data error 3					
71.5	Load-side encoder normal communication - Transmission data error 1					
71.6	Load-side encoder normal communication - Transmission data error 2					
71.7	Load-side encoder normal communication - Transmission data error 3					
71.9	Load-side encoder normal communication - Receive data error 4					
71.A	Load-side encoder normal communication - Receive data error 5					

Alarm No.: 72		Name: Load-side encoder normal communication error 2					
Alarm content		· The load-side encoder detected an error signal.					
Detail No.	Detail name	Cause		Check method	Check result	Action	Target
72.1	Load-side encoder data error 1	(1)	The encoder detected a high speed/acceleration rate due to an oscillation or other factors.	Decrease the loop gain, and then check the repeatability.	It is not repeatable.	Use the encoder with low loop gain.	[A] [B] [WB] [GF]
					It is repeatable.	Check (2).	
		(2)	A load-side encoder is malfunctioning.	Replace the load-side encoder, and then check the repeatability.	It is not repeatable.	Replace the load-side encoder.	
					It is repeatable.	Check (3).	
		(3)	Something near the device caused it.	Check the noise, ambient temperature, vibration, etc.	There is a problem in the surrounding.	Take countermeasures against its cause.	
72.2	Load-side encoder data update error	(1)	A load-side encoder is malfunctioning.	Replace the load-side encoder, and then check the repeatability.	It is not repeatable.	Replace the load-side encoder.	
					It is repeatable.	Check (2).	
		(2)	Something near the device caused it.	Check the noise, ambient temperature, etc.	There is a problem in the surrounding.	Take countermeasures against its cause.	
72.3	Load-side encoder data waveform error	Check it with the check method for [AL. 72.2].					
72.4	Load-side encoder non-signal error	(1)	A signal of the load-side encoder has not been inputted.	Check if the load-side encoder cable is wired correctly.	It has a failure.	Review the wiring.	[A] [B] [WB] [GF]
					It has no failure.	Check (2).	
		(2)	Something near the device caused it.	Check the noise, ambient temperature, etc.	There is a problem in the surrounding.	Take countermeasures against its cause.	
72.5	Load-side encoder hardware error 1	Check it with the check method for [AL. 72.2].					
72.6	Load-side encoder hardware error 2						
72.9	Load-side encoder data error 2	Check it with the check method for [AL. 72.1].					

Alarm No.: 74		Name: Option card error 1					
Alarm content		· MR-J3-T10 came off. · MR-J3-T10 is not properly recognized.					
Detail No.	Detail name	Cause		Check method	Check result	Action	Target
74.1	Option card error 1	(1)	The MR-J3-T10 came off during the CC-Link IE communication.	Check if the MR-J3-T10 is mounted correctly.	It is not mounted correctly.	Install it correctly.	[RJ010]
					It is mounted correctly.	Check (2).	
		(2)	MR-J3-T10 is malfunctioning.	Replace the MR-J3-T10, and then check the repeatability.	It is not repeatable.	Replace the MR-J3-T10.	
					It is repeatable.	Check (3).	
		(3)	The servo amplifier is malfunctioning.	Replace the servo amplifier, and then check the repeatability.	It is not repeatable.	Replace the servo amplifier.	

Alarm No.: 74		Name: Option card error 1				
Alarm content		· MR-J3-T10 came off. · MR-J3-T10 is not properly recognized.				
Detail No.	Detail name	Cause	Check method	Check result	Action	Target
74.2	Option card error 2	Check it with the check method for [AL. 74.1].				
74.3	Option card error 3					
74.4	Option card error 4					
74.5	Option card error 5					

Alarm No.: 75		Name: Option card error 2					
Alarm content		· MR-J3-T10 came off.					
Detail No.	Detail name	Cause		Check method	Check result	Action	Target
75.3	Option card connection error	(1)	MR-J3-T10 came off.	Check if the MR-J3-T10 is mounted correctly.	It is not mounted correctly.	Install it correctly.	[RJ010]
					It is mounted correctly.	Check (2).	
		(2)	MR-J3-T10 is malfunctioning.	Replace the MR-J3-T10, and then check the repeatability.	It is not repeatable.	Replace the MR-J3-T10.	
					It is repeatable.	Check (3).	
		(3)	The servo amplifier is malfunctioning.	Replace the servo amplifier, and then check the repeatability.	It is not repeatable.	Replace the servo amplifier.	
75.4	Option card disconnected	(1)	MR-J3-T10 was not connected correctly.	Check if the MR-J3-T10 is mounted correctly.	It is not mounted correctly.	Install it correctly.	
					It is mounted correctly.	Check (2).	
		(2)	MR-J3-T10 is malfunctioning.	Replace the MR-J3-T10, and then check the repeatability.	It is not repeatable.	Replace the MR-J3-T10.	
					It is repeatable.	Check (3).	
		(3)	The servo amplifier is malfunctioning.	Replace the servo amplifier, and then check the repeatability.	It is not repeatable.	Replace the servo amplifier.	

Alarm No.: 79		Name: Functional safety unit diagnosis error					
Alarm content		· A diagnosis of the functional safety unit failed.					
Detail No.	Detail name	Cause		Check method	Check result	Action	Target
79.1	Functional safety unit power voltage error	(1)	The power supply of the functional safety unit is failure.	Check the installation of the functional safety unit.	It has a failure.	Install it correctly.	[A] [B] [GF]
					It has no failure.	Check (2).	
		(2)	The functional safety unit is malfunctioning.	Replace the functional safety unit, and then check the repeatability.	It is not repeatable.	Replace the functional safety unit.	
					It is repeatable.	Check (3).	
		(3)	The servo amplifier is malfunctioning.	Replace the servo amplifier, and then check the repeatability.	It is not repeatable.	Replace the servo amplifier.	
					It is repeatable.	Check (4).	
		(4)	Something near the device caused it.	Check the power supply for noise.	There is a problem in the surrounding.	Take countermeasures against its cause.	
79.2	Functional safety unit internal error	(1)	The functional safety unit is malfunctioning.	Replace the functional safety unit, and then check the repeatability.	It is not repeatable.	Replace the functional safety unit.	
					It is repeatable.	Check (2).	
		(2)	Something near the device caused it.	Check the power supply for noise.	There is a problem in the surrounding.	Take countermeasures against its cause.	

Alarm No.: 79		Name: Functional safety unit diagnosis error					
Alarm content		· A diagnosis of the functional safety unit failed.					
Detail No.	Detail name	Cause		Check method	Check result	Action	Target
79.3	Abnormal temperature of functional safety unit	(1)	Ambient temperature has exceeded 55 ℃.	Check the ambient temperature.	It is over 55 ℃.	Lower the ambient temperature.	[A] [B] [GF]
					It is less than 55 ℃.	Check (2).	
		(2)	Ambient temperature is less than 0 ℃.	Check the ambient temperature.	It is less than 0 ℃.	Increase the ambient temperature.	
					It is 0 ℃ or more.	Check (3).	
		(3)	The close mounting is out of specifications.	Check the specifications of close mounting.	It is out of specifications.	Mount it correctly.	
					It is within specifications.	Check (4).	
		(4)	An opening is clogged up.	Clean the opening and check the repeatability.	It is not repeatable.	Clean it periodically.	
					It is repeatable.	Check (5).	
		(5)	The functional safety unit is malfunctioning.	Replace the functional safety unit, and then check the repeatability.	It is not repeatable.	Replace the functional safety unit.	
					It is repeatable.	Check (6).	
		(6)	Something near the device caused it.	Check the power supply for noise.	There is a problem in the surrounding.	Take countermeasures against its cause.	
79.4	Servo amplifier error	(1)	The functional safety unit came off.	Check the installation of the functional safety unit.	It has a failure.	Install it correctly.	
					It has no failure.	Check (2).	
		(2)	The functional safety unit is malfunctioning.	Replace the functional safety unit, and then check the repeatability.	It is not repeatable.	Replace the functional safety unit.	
					It is repeatable.	Check (3).	
		(3)	The servo amplifier is malfunctioning.	Replace the servo amplifier, and then check the repeatability.	It is not repeatable.	Replace the servo amplifier.	
					It is repeatable.	Check (4).	
		(4)	Something near the device caused it.	Check the noise, ambient temperature, etc.	There is a problem in the surrounding.	Take countermeasures against its cause.	
79.5	Input device error	(1)	A signal of input device is not inputted correctly.	Check if the input device cable is wired correctly.	It has a failure.	Review the wiring.	
					It has no failure.	Check (2).	
		(2)	The input device setting parameter is not set correctly.	Check if the parameter is set correctly.	It is not set correctly.	Review the parameter.	
					It is set correctly.	Check (3).	
		(3)	The test pulse time was not set correctly.	Check the setting of [Pr. PSD26 Input device - Test pulse off time].	The test pulse width is longer than the set value.	Set the value longer.	
					The test pulse width is shorter than the set value.	Check (4).	
		(4)	The functional safety unit is malfunctioning.	Replace the functional safety unit, and then check the repeatability.	It is not repeatable.	Replace the functional safety unit.	
					It is repeatable.	Check (5).	
		(5)	Something near the device caused it.	Check the noise, ambient temperature, etc.	There is a problem in the surrounding.	Take countermeasures against its cause.	

Alarm No.: 79		Name: Functional safety unit diagnosis error					
Alarm content		- A diagnosis of the functional safety unit failed.					
Detail No.	Detail name	Cause		Check method	Check result	Action	Target
79.6	Output device error	(1)	A signal of an output device has not been outputted correctly.	Check if the output device cable is wired correctly. Or check if the load of the output device is within the specifications.	It has a failure.	Review the wiring or load.	[A] [B] [GF]
					It has no failure.	Check (2).	
		(2)	The test pulse time was not set correctly.	Check the setting of [Pr. PSD30 Output device - Test pulse off time].	The test pulse width is longer than the set value.	Set the value longer.	
					The test pulse width is shorter than the set value.	Check (3).	
		(3)	Current of the output device is excessive.	Check if the current is used within prescribed.	Not within prescribed.	Reduce the output current.	
					Within prescribed.	Check (4).	
		(4)	The functional safety unit is malfunctioning.	Replace the functional safety unit, and then check the repeatability.	It is not repeatable.	Replace the functional safety unit.	
					It is repeatable.	Check (5).	
		(5)	Something near the device caused it.	Check the noise, ambient temperature, etc.	There is a problem in the surrounding.	Take countermeasures against its cause.	
79.7	Mismatched input signal error	(1)	A mismatch of input signal DI_A and DI_B continued for a fixed time ([Pr. PSD18] to [Pr. PSD23]).	Check if the input device cable is wired correctly.	It has a failure.	Review the wiring.	
					It has no failure.	Check (2).	
		(2)	An input mismatch time was not set correctly.	Check the settings of [Pr. PSD18 Mismatch permissible time DI1] to [Pr. PSD23 Mismatch permissible time DI6].	The mismatched time is longer than the set value.	Set the value longer.	
					The mismatched time is shorter than the set value.	Check (3).	
		(3)	The functional safety unit is malfunctioning.	Replace the functional safety unit, and then check the repeatability.	It is not repeatable.	Replace the functional safety unit.	
					It is repeatable.	Check (4).	
		(4)	Something near the device caused it.	Check the noise, ambient temperature, etc.	There is a problem in the surrounding.	Take countermeasures against its cause.	
79.8	Position feedback fixing error	(1)	The position feedback data do not change within the position feedback fixing error detection time [Pr. PSA22].	Check the [Pr. PSA22] setting.	It is not set correctly.	Review the parameter.	
					It is set correctly.	Check (2).	
		(2)	The position feedback data do not change.	Check the feedback data by rotating the servo motor.	The position feedback data changes.	Perform an operation which rotates the servo motor within the position feedback fixing error detection time [Pr. PSA22].	
					The position feedback data do not change.	Check (3).	
		(3)	The servo motor is malfunctioning.	Replace the servo motor, and then check the repeatability.	It is not repeatable.	Replace the servo motor.	
					It is repeatable.	Check (4).	
		(4)	The functional safety unit is malfunctioning.	Replace the functional safety unit, and then check the repeatability.	It is not repeatable.	Replace the functional safety unit.	

Alarm No.: 7A		Name: Parameter setting error (safety observation function)					
Alarm content		· A parameter of the functional safety unit failed.					
Detail No.	Detail name	Cause		Check method	Check result	Action	Target
7A.1	Parameter verification error (safety observation function)	(1)	A parameter of the functional safety unit is incorrect.	Review the parameter.	It is not repeatable.	Set the parameter correctly.	[A] [B] [GF]
					It is repeatable.	Check (2).	
		(2)	The functional safety unit is malfunctioning.	Replace the functional safety unit, and then check the repeatability.	It is not repeatable.	Replace the functional safety unit.	
					It is repeatable.	Check (3).	
		(3)	Something near the device caused it.	Check the noise, ambient temperature, etc.	There is a problem in the surrounding.	Take countermeasures against its cause.	
7A.2	Parameter setting range error (safety observation function)	(1)	The initial settings for the functional safety unit have not been finished.	Check the [Pr. PSA01] setting.	It is not enabled.	Enable the setting with checking parameter contents.	
					It is enabled.	Check (2).	
		(2)	A parameter of the functional safety unit was set out of range.	Check the value of set parameters.	It is out of setting range.	Set it within the range.	
7A.3	Parameter combination error (safety observation function)	(1)	A parameter of the functional safety unit or servo amplifier is incorrect.	Check the parameter settings of the functional safety unit and servo amplifier. Functional safety unit: [Pr. PSA02], [Pr. PSA18] to [Pr. PSA21], [Pr. PSC03], [Pr. PSD01] to [Pr. PSD17], [Pr. PSD26] Servo amplifier: [Pr. PA14]	It is not set correctly.	Set the parameter correctly.	
7A.4	Functional safety unit combination error (safety observation function)	(1)	A combination of functional safety unit and servo amplifier is incorrect.	Check if correct combination of servo amplifier is connected.	A different servo amplifier is connected.	Return to the servo amplifier which was combined with the functional safety unit and was set the safety observation function, or initialize the setting.	

Alarm No.: 7B		Name: Encoder diagnosis error (safety observation function)					
Alarm content		· Error occurred in encoder.					
Detail No.	Detail name	Cause		Check method	Check result	Action	Target
7B.1	Encoder diagnosis error 1 (safety observation function)	(1)	An encoder cable is malfunctioning.	Check if the encoder cable is disconnected or shorted.	It has a failure.	Repair or replace the cable.	[A] [B] [GF]
					It has no failure.	Check (2).	
		(2)	An encoder is malfunctioning.	Replace the servo motor, and then check the repeatability.	It is not repeatable.	Replace the servo motor.	
					It is repeatable.	Check (3).	
		(3)	The functional safety unit is malfunctioning.	Replace the functional safety unit, and then check the repeatability.	It is not repeatable.	Replace the functional safety unit.	
					It is repeatable.	Check (4).	
		(4)	The servo amplifier is malfunctioning.	Replace the servo amplifier, and then check the repeatability.	It is not repeatable.	Replace the servo amplifier.	
					It is repeatable.	Check (5).	
		(5)	Something near the device caused it.	Check the noise, ambient temperature, vibration, etc.	There is a problem in the surrounding.	Take countermeasures against its cause.	

Alarm No.: 7B		Name: Encoder diagnosis error (safety observation function)					
Alarm content		Error occurred in encoder.					
Detail No.	Detail name	Cause		Check method	Check result	Action	Target
7B.2	Encoder diagnosis error 2 (safety observation function)	Check it with the check method for [AL. 7B.1].					
7B.3	Encoder diagnosis error 3 (safety observation function)						
7B.4	Encoder diagnosis error 4 (safety observation function)	(1)	Ambient temperature of the encoder has exceeded 40 °C.	Check the ambient temperature of the encoder.	It is over 40 °C.	Lower the ambient temperature.	[A] [B] [GF]
					It is 40 °C or less.	Check (2).	
		(2)	Ambient temperature of the encoder is less than 0 °C.	Check the ambient temperature of the encoder.	It is 0 °C or less.	Increase the ambient temperature.	
					It is 0 °C or more.	Check (3).	
		(3)	Servo motor is overloaded.	Check the effective load ratio.	The effective load ratio is high.	Reduce the load or review the operation pattern.	
					The effective load ratio is small.	Check (4).	
		(4)	The thermal sensor in the encoder is malfunctioning.	Replace the servo motor, and then check the repeatability.	It is not repeatable.	Replace the servo motor.	
					It is repeatable.	Check (5).	
		(5)	The functional safety unit is malfunctioning.	Replace the functional safety unit, and then check the repeatability.	It is not repeatable.	Replace the functional safety unit.	

Alarm No.: 7C		Name: Functional safety unit communication diagnosis error (safety observation function)					
Alarm content		The network communication had an error in the functional safety unit.					
Detail No.	Detail name	Cause		Check method	Check result	Action	Target
7C.1	Functional safety unit communication setting error (safety observation function)	(1)	Communication cycle does not match.	Check the communication cycle setting ([Pr. PSC01]) of the servo system controller and the functional safety unit.	Communication cycle setting is incorrect.	Set it correctly.	[B] [GF]
					Communication cycle setting is correct.	Check (2).	
		(2)	The time taken for the detection of safety communication errors is not set correctly.	Refer to "MR-D30 Instruction Manual" and check the setting.	It is not set correctly.	Set it correctly.	[GF]
					It is set correctly.	Check (3).	
		(3)	The functional safety unit is malfunctioning.	Replace the functional safety unit, and then check the repeatability.	It is not repeatable.	Replace the functional safety unit.	[B] [GF]
					It is repeatable.	Check (4).	
		(4)	Something near the device caused it.	Check the noise, ambient temperature, etc.	There is a problem in the surrounding.	Take countermeasures against its cause.	

Alarm No.: 7C		Name: Functional safety unit communication diagnosis error (safety observation function)					
Alarm content		The network communication had an error in the functional safety unit.					
Detail No.	Detail name	Cause		Check method	Check result	Action	Target
7C.2	Functional safety unit communication data error (safety observation function)	(1)	The time taken for the detection of safety communication errors is not set correctly.	Refer to "MR-D30 Instruction Manual" and check the setting.	It is not set correctly.	Set it correctly.	[GF]
					It is set correctly.	Check (2).	
		(2)	An error occurred at the safety master station side.	Check if an alarm occurs at the safety master station.	It is occurring.	Refer to the troubleshooting for the master station and take countermeasures.	
					It did not occur.	Check (3).	
		(3)	An error occurred at the servo system controller side.	Check if the settings of the servo system controller side are correct.	It has a failure.	Set it correctly.	[B]
					It has no failure.	Check (4).	
		(4)	[B]: Check it with the check method for [AL. 34.1]. [GF]: Check it with the check method for [AL. 8D.1].				[B] [GF]

Alarm No.: 7D		Name: Safety observation error					
Alarm content		· The safety observation function detected an error.					
Detail No.	Detail name	Cause		Check method	Check result	Action	Target
7D.1	Stop observation error	(1)	During activation of SOS function, the position of the servo motor has changed by more than the SOS allowance value set by parameter.	Check that the actual servo motor position is higher than the setting value of [Pr. PSA05].	The travel distance of the servo motor is larger than the setting value in [Pr. PSA05].	Review the alarm level.	[A] [B] [GF]
					The travel distance of the servo motor is smaller than the alarm detection level.	Check (2).	
		(2)	During activation of SOS function, the servo motor speed has changed by larger than the SOS allowance value set by parameter, and that state has continued for longer than the set time (specified by [Pr. PSA15]).	The actual servo motor speed is higher than the setting value of [Pr. PSA04].	The servo motor speed is higher than the setting value in [Pr. PSA04].	Review the parameter setting.	
					The servo motor speed is higher than the setting value in [Pr. PSA15] and equal to or lower than that in [Pr. PSA04].	Check (3).	
		(3)	During activation of SOS function, the speed command has changed by larger than the SOS allowance value set by parameter, and that state has continued for longer than the set time (specified by [Pr. PSA15]).	Check if the command from the controller is over the standstill speed set in [Pr. PSA04].	The command from the controller is over the setting valued in [Pr. PSA04].	Check the operation pattern.	
					The command from controller is higher than the setting value in [Pr. PSA15] and equal to or lower than that in [Pr. PSA04].	Check (4).	
		(4)	An encoder is malfunctioning.	Replace the servo motor, and then check the repeatability.	It is not repeatable.	Replace the servo motor.	
					It is repeatable.	Check (5).	
		(5)	The functional safety unit is malfunctioning.	Replace the functional safety unit, and then check the repeatability.	It is not repeatable.	Replace the functional safety unit.	
					It is repeatable.	Check (6).	
		(6)	The servo amplifier is malfunctioning.	Replace the servo amplifier, and then check the repeatability.	It is not repeatable.	Replace the servo motor.	
					It is repeatable.	Check (7).	
		(7)	Something near the device caused it.	Check the noise, ambient temperature, vibration, etc.	There is a problem in the surrounding.	Take countermeasures against its cause.	

Alarm No.: 7D		Name: Safety observation error					
Alarm content		The safety observation function detected an error.					
Detail No.	Detail name	Cause		Check method	Check result	Action	Target
7D.2	Speed observation error	(1)	The command pulse frequency is high.	Check the command pulse frequency.	The command pulse frequency is high.	Check operation pattern.	[A] [B] [GF]
					The command pulse frequency is low.	Check (2).	
		(2)	The settings of the electronic gear are incorrect.	Check the setting value of the electronic gear.	The setting value is incorrect.	Review the settings.	
					The setting value is correct.	Check (3).	
		(3)	The command from the controller is excessive.	Check if the command from the controller is the SLS speed ([Pr. PSA11] to [Pr. PSA14]) or more.	It is over the permissible speed.	Check operation pattern.	
					It is less than the permissible speed.	Check (4).	
		(4)	A larger speed command than the SLS speed ([Pr. PSA11] to [Pr. PSA14]) was inputted.	Check that the actual servo motor speed is higher than the setting value of the SLS speed.	The servo motor speed is higher than the SLS speed.	Review the setting value of the SLS speed.	
					The servo motor speed is lower than the SLS speed.	Check (5).	
		(5)	The servo system is unstable and oscillating.	Check if the servo motor is oscillating.	It is oscillating.	Adjust the servo gain. Or reduce the load.	
					It is not oscillating.	Check (6).	
		(6)	The velocity waveform has overshot.	Check if it is overshooting because the acceleration time constant is too short.	It is overshooting.	Increase the acceleration/deceleration time constant.	
					It is not overshooting.	Check (7).	
		(7)	The connection destination of the encoder cable is incorrect.	Check the connection destination of the encoder.	It is not correct.	Wire it correctly.	
					It is correct.	Check (8).	
		(8)	The encoder or linear encoder is malfunctioning.	Replace the servo motor, and then check the repeatability.	It is not repeatable.	Replace the servo motor.	
					It is repeatable.	Check (9).	
		(9)	The functional safety unit is malfunctioning.	Replace the functional safety unit, and then check the repeatability.	It is not repeatable.	Replace the functional safety unit.	
					It is repeatable.	Check (10).	
		(10)	The servo amplifier is malfunctioning.	Replace the servo amplifier, and then check the repeatability.	It is not repeatable.	Replace the servo amplifier.	
					It is repeatable.	Check (11).	
		(11)	Something near the device caused it.	Check the noise, ambient temperature, etc.	There is a problem in the surrounding.	Take countermeasures against its cause.	

Alarm No.: 82		Name: Master-slave operation error 1				
Alarm content		Driver communication error was detected.				
Detail No.	Detail name	Cause	Check method	Check result	Action	Target
82.1	Master-slave operation error 1	Check it with the check method for [AL. 34.1].				[B] (slave)

Alarm No.: 84	Name: Network module initialization error						
Alarm content	· The network module is not connected. · An error occurred at initialization of the network module.						
Detail No.	Detail name	Cause		Check method	Check result	Action	Target
84.1	Network module undetected error	(1)	The network module was disconnected.	Check if the network module is connected correctly.	It is not connected correctly.	Connect it correctly.	[Other]
					It is connected correctly.	Check (2).	
		(2)	Something near the device caused it.	Check the noise, ambient temperature, etc. Refer to "Noise reduction techniques" section in each servo amplifier instruction manual for the noise reduction techniques.	There is a problem in the surrounding.	Take countermeasures against its cause.	
					There is no problem in the surrounding.	Check (3).	
		(3)	The network module is malfunctioning.	Replace the network module, and then check the repeatability.	It is not repeatable.	Replace the network module.	
					It is repeatable.	Check (4).	
		(4)	The servo amplifier is malfunctioning.	Replace the servo amplifier, and then check the repeatability.	It is not repeatable.	Replace the servo amplifier.	
84.2	Network module initialization error 1	(1)	The network module was disconnected.	Check if the network module is connected correctly.	It is not connected correctly.	Connect it correctly.	
					It is connected correctly.	Check (2).	
		(2)	A network module, which is not compatible with the servo amplifier, has been connected.	Check if the network module is compatible with the servo amplifier.	It is not compatible.	Replace with a network module compatible with the servo amplifier.	
					It is compatible.	Check (3).	
		(3)	A network cable was disconnected.	Check if the network cable is connected correctly.	It is not connected.	Connect it correctly.	
					It is connected.	Check (4).	
		(4)	The wiring of the network cable was incorrect.	Check if the wiring of network cable is correct.	The wiring is incorrect.	Wire it correctly.	
					The wiring is correct.	Check (5).	
		(5)	A network cable was disconnected.	Check if the network cable is malfunctioning.	It has a failure.	Replace the network cable.	
					It has no failure.	Check (6).	
		(6)	Something near the device caused it.	Check the noise, ambient temperature, etc. Refer to "Noise reduction techniques" section in each servo amplifier instruction manual for the noise reduction techniques.	There is a problem in the surrounding.	Take countermeasures against its cause.	
					There is no problem in the surrounding.	Check (7).	
		(7)	The network module is malfunctioning.	Replace the network module, and then check the repeatability.	It is not repeatable.	Replace the network module.	
					It is repeatable.	Check (8).	
		(8)	The servo amplifier is malfunctioning.	Replace the servo amplifier, and then check the repeatability.	It is not repeatable.	Replace the servo amplifier.	
84.3	Network module initialization error 2	Check it with the check method for [AL. 84.2].					

Alarm No.: 85		Name: Network module error					
Alarm content		· The network module was disconnected. · An error occurred in the network module. (Refer to section 1.7.)					
Detail No.	Detail name	Cause		Check method	Check result	Action	Target
85.1	Network module error 1	(1)	The network module was disconnected.	Check if the network module is connected correctly.	It is not connected correctly.	Connect it correctly.	[Other]
					It is connected correctly.	Check (2).	
		(2)	A network cable was disconnected.	Check if the network cable is connected correctly.	It is not connected.	Connect it correctly.	
					It is connected.	Check (3).	
		(3)	The wiring of the network cable was incorrect.	Check if the wiring of network cable is correct.	The wiring is incorrect.	Wire it correctly.	
					The wiring is correct.	Check (4).	
		(4)	A network cable was disconnected.	Check if the network cable is malfunctioning.	It has a failure.	Replace the network cable.	
					It has no failure.	Check (5).	
		(5)	The setting of the controller is incorrect.	Check the controller setting.	It is incorrect.	Review the settings.	
					It is correct.	Check (6).	
		(6)	Something near the device caused it.	Check the noise, ambient temperature, etc. Refer to "Noise reduction techniques" section in each servo amplifier instruction manual for the noise reduction techniques.	There is a problem in the surrounding.	Take countermeasures against its cause.	
					There is no problem in the surrounding.	Check (7).	
		(7)	The network module is malfunctioning.	Replace the network module, and then check the repeatability.	It is not repeatable.	Replace the network module.	
					It is repeatable.	Check (8).	
		(8)	The servo amplifier is malfunctioning.	Replace the servo amplifier, and then check the repeatability.	It is not repeatable.	Replace the servo amplifier.	
					It is repeatable.	Check (9).	
		(9)	The controller is malfunctioning.	Replace the controller, and then check the repeatability.	It is not repeatable.	Replace the controller.	
85.2	Network module error 2	Check it with the check method for [AL. 85.1].					
85.3	Network module error 3						

Alarm No.: 86		Name: Network communication error					
Alarm content		· An error occurred in the network module. · An error occurred in the network communication.					
Detail No.	Detail name	Cause		Check method	Check result	Action	Target
86.1	Network communication error 1	(1)	The network module was disconnected.	Check if the network module is connected correctly.	It is not connected correctly.	Connect it correctly.	[Other]
					It is connected correctly.	Check (2).	
		(2)	A network cable was disconnected.	Check if the network cable is connected correctly.	It is not connected.	Turn off the control circuit power supply of the servo amplifier, and then connect the network cable correctly.	[GF] [Other]
					It is connected.	Check (3).	
		(3)	The wiring of the network cable was incorrect.	Check if the wiring of network cable is correct.	The wiring is incorrect.	Wire it correctly.	
					The wiring is correct.	Check (4).	
		(4)	A network cable was disconnected.	Check if the network cable is malfunctioning.	It has a failure.	Replace the network cable.	
					It has no failure.	Check (5).	
		(5)	The network was disconnected by a wrong procedure.	Check if the network was disconnected according to the kind of network.	It was not performed.	Perform it.	
					It was performed.	Check (6).	
		(6)	Data transmission from the controller was interrupted for a certain period of time.	Check if data transmission from the controller is not interrupted.	It is interrupted.	Review the controller communication setting.	
					It is not interrupted.	Check (7).	
		(7)	The setting of the controller is incorrect.	Check the controller setting.	It is incorrect.	Review the settings.	
					It is correct.	Check (8).	
		(8)	Something near the device caused it.	Check the noise, ambient temperature, etc. Refer to "Noise reduction techniques" section in each servo amplifier instruction manual for the noise reduction techniques.	There is a problem in the surrounding.	Take Countermeasures against its cause.	
					There is no problem in the surrounding.	Check (9).	
		(9)	The network module is malfunctioning.	Replace the network module, and then check the repeatability.	It is not repeatable.	Replace the network module.	[Other]
					It is repeatable.	Check (10).	
		(10)	The servo amplifier is malfunctioning.	Replace the servo amplifier, and then check the repeatability.	It is not repeatable.	Replace the servo amplifier.	[GF] [Other]
					It is repeatable.	Check (11).	
		(11)	The controller is malfunctioning.	Replace the controller, and then check the repeatability.	It is not repeatable.	Replace the controller.	
86.2	Network communication error 2	Check it with the check method for [AL. 86.1].					
86.3	Network communication error 3						
86.4	Network communication error 4						

Alarm No.: 8A		Name: USB communication time-out error/serial communication time-out error/Modbus RTU communication time-out error					
Alarm content		· Communication between the servo amplifier and a personal computer/controller stopped for the specified time or longer. · An error occurred in USB communication, serial communication (Mitsubishi Electric general-purpose AC servo protocol), or Modbus RTU communication.					
Detail No.	Detail name	Cause		Check method	Check result	Action	Target
8A.1	USB communication time-out error/ serial communication time-out error	(1)	Communication commands have not been transmitted.	Check if a command was transmitted from the personal computer, etc.	It was not transmitted.	Transmit a command.	[A] [B] [WB] [RJ010] [GF]
					It was transmitted.	Check (2).	
		(2)	A communication cable was disconnected.	Replace the communication cable, and then check the repeatability.	It is not repeatable.	Replace the communication cable.	
					It is repeatable.	Check (3).	
		(3)	The servo amplifier is malfunctioning.	Replace the servo amplifier, and then check the repeatability.	It is not repeatable.	Replace the servo amplifier.	
8A.2	Modbus RTU communication time-out error	(1)	Communication commands have not been transmitted.	Check if a command was transmitted from the controller, etc.	It was not transmitted.	Transmit a command.	[A]
					It was transmitted.	Check (2).	
		(2)	A communication cable was disconnected.	Replace the communication cable, and then check the repeatability.	It is not repeatable.	Replace the communication cable.	
					It is repeatable.	Check (3).	
		(3)	The servo amplifier is malfunctioning.	Replace the servo amplifier, and then check the repeatability.	It is not repeatable.	Replace the servo amplifier.	

Alarm No.: 8D		Name: CC-Link IE communication error					
Alarm content		MR-J3-T10 came off. An error occurred in CC-Link IE communication.					
Detail No.	Detail name	Cause		Check method	Check result	Action	Target
8D.1	CC-Link IE communication error 1	(1)	The MR-J3-T10 came off during the CC-Link IE communication.	Check if [AL. 74 Option card error 1] occurred with alarm history.	It is occurring.	Check it with the check method for [AL. 74].	[RJ010]
					It did not occur.	Check (2).	
		(2)	The Ethernet cable was disconnected.	Check the Ethernet cable connection.	It is disconnected.	Turn off the control circuit power supply of the servo amplifier, and then connect the Ethernet cable.	[RJ010] [GF]
					It is connected.	Check (3).	
		(3)	The CC-Link IE communication was disconnected by using a wrong procedure.	Check if the communication was disconnected by using the correct procedure.	The communication was disconnected by using a wrong procedure.	Follow the correct procedure for disconnecting the communication.	
					The communication was disconnected by using the correct procedure.	Check (4).	
		(4)	The wiring of the Ethernet cable was incorrect.	Check if the wiring of Ethernet cable is correct.	The wiring is incorrect.	Wire it correctly.	
					The wiring is correct.	Check (5).	
		(5)	An Ethernet cable was disconnected.	Check if the Ethernet cable is malfunctioning.	It has a failure.	Replace the Ethernet cable.	
					It has no failure.	Check (6).	
		(6)	The transmission status of the CC-Link IE communication is abnormal.	Check the noise, ambient temperature, etc.	It has a failure.	Take countermeasures against its cause.	
					It has no failure.	Check (7).	
		(7)	MR-J3-T10 is malfunctioning.	Replace the MR-J3-T10, and then check the repeatability.	It is not repeatable.	Replace the MR-J3-T10.	
					It is repeatable.	Check (8).	
		(8)	The servo amplifier is malfunctioning.	Replace the servo amplifier, and then check the repeatability.	It is not repeatable.	Replace the servo amplifier.	[RJ010]
					It is repeatable.	Check (9).	
		(9)	The master station is malfunctioning.	Check if the master station is malfunctioning.	It has a failure.	Replace the master station.	[RJ010] [GF]
8D.2	CC-Link IE communication error 2	Check it with the check method for [AL. 8D.1].					
8D.3	Master station setting error 1	(1)	The station No. is set to a value other than 1 to 120 with the master station.	Check the [Pr. Po02] setting.	The setting value is incorrect.	Set it correctly.	[RJ010]
					The setting value is correct.	Check (2).	
		(2)	The network number is set to a value other than 1 to 239 with the master station.	Check the [Pr. Po03] setting.	The setting value is incorrect.	Set it correctly.	
					The setting value is correct.	Check (3).	
		(3)	MR-J3-T10 is malfunctioning.	Replace the MR-J3-T10, and then check the repeatability.	It is not repeatable.	Replace the MR-J3-T10.	
					It is repeatable.	Check (4).	
		(4)	The servo amplifier is malfunctioning.	Replace the servo amplifier, and then check the repeatability.	It is not repeatable.	Replace the servo amplifier.	
					It is repeatable.	Check (5).	
		(5)	The master station is malfunctioning.	Check if the master station is malfunctioning.	It has a failure.	Replace the master station.	

Alarm No.: 8D		Name: CC-Link IE communication error					
Alarm content		· MR-J3-T10 came off. · An error occurred in CC-Link IE communication.					
Detail No.	Detail name	Cause		Check method	Check result	Action	Target
8D.5	Master station setting error 2	(1)	A reserved station has been selected by the master station, and the cyclic communication has stopped.	Check if a reserved station is selected.	It is selected.	Cancel the reserved station.	[RJ010]
8D.6	CC-Link IE communication error 3	Check it with the check method for [AL. 8D.1].					
8D.7	CC-Link IE communication error 4	(1)	The transmission status of the CC-Link IE communication is abnormal.	Check the noise, ambient temperature, etc.	It has a failure.	Take countermeasures against its cause.	[RJ010] [GF]
					It has no failure.	Check (2).	
		(2)	MR-J3-T10 is malfunctioning.	Replace the MR-J3-T10, and then check the repeatability.	It is not repeatable.	Replace the MR-J3-T10.	[RJ010]
					It is repeatable.	Check (3).	
		(3)	The servo amplifier is malfunctioning.	Replace the servo amplifier, and then check the repeatability.	It is not repeatable.	Replace the servo amplifier.	[RJ010] [GF]
					It is repeatable.	Check (4).	
		(4)	The master station is malfunctioning.	Check if the master station is malfunctioning.	It has a failure.	Replace the master station.	
8D.8	CC-Link IE communication error 5	Check it with the check method for [AL. 8D.7].					
8D.9	Synchronization error 1	Check it with the check method for [AL. 8D.1].					
8D.A	Synchronization error 2						

Alarm No.: 8E		Name: USB communication error/serial communication error/Modbus RTU communication error					
Alarm content		· A communication error occurred between the servo amplifier and a personal computer/controller. · An error occurred in USB communication, serial communication (Mitsubishi Electric general-purpose AC servo protocol), or Modbus RTU communication.					
Detail No.	Detail name	Cause		Check method	Check result	Action	Target
8E.1	USB communication receive error/ serial communication receive error	(1)	The setting of the personal computer, etc. is incorrect.	Check the setting of the personal computer, etc.	It is incorrect.	Review the settings.	[A] [B] [WB] [RJ010] [GF]
					It is correct.	Check (2).	
		(2)	A communication cable is malfunctioning.	Check the communication cable, and then check the repeatability.	It is not repeatable.	Replace the communication cable.	
					It is repeatable.	Check (3).	
		(3)	The servo amplifier is malfunctioning.	Replace the servo amplifier, and then check the repeatability.	It is not repeatable.	Replace the servo amplifier.	
8E.2	USB communication checksum error/ serial communication checksum error	(1)	The setting of the personal computer, etc. is incorrect.	Check the setting of the personal computer, etc.	It is incorrect.	Review the settings.	
8E.3	USB communication character error/ serial communication character error	(1)	The transmitted character is out of specifications.	Check the character code at the time of transmission.	The transmitted character is out of specifications.	Correct the transmission data.	[A] [B] [WB] [RJ010]
					The transmitted character is within specifications.	Check (2).	
		(2)	The communication protocol is failure.	Check if transmission data supports the communication protocol.	It is not conforming.	Modify the transmission data according to the communication protocol.	
					It is conforming.	Check (3).	
		(3)	The setting of the personal computer, etc. is incorrect.	Check the setting of the personal computer, etc.	It is incorrect.	Review the settings.	
8E.4	USB communication command error/ serial communication command error	(1)	The transmitted command is out of specifications.	Check the command at the time of transmission.	The transmitted command is out of specifications.	Correct the transmission data.	
					The transmitted command is within specifications.	Check (2).	
		(2)	The communication protocol is failure.	Check if transmission data supports the communication protocol.	It is not conforming.	Modify the transmission data according to the communication protocol.	
					It is conforming.	Check (3).	
		(3)	The setting of the personal computer, etc. is incorrect.	Check the setting of the personal computer, etc.	It is incorrect.	Review the settings.	
8E.5	USB communication data number error/serial communication data number error	(1)	The transmitted data number is out of specifications.	Check the data number at the time of transmission.	The transmitted data number is out of specifications.	Correct the transmission data.	
					The transmitted data number is within specifications.	Check (2).	
		(2)	The communication protocol is failure.	Check if transmission data supports the communication protocol.	It is not conforming.	Modify the transmission data according to the communication protocol.	
					It is conforming.	Check (3).	
		(3)	The setting of the personal computer, etc. is incorrect.	Check the setting of the personal computer, etc.	It is incorrect.	Review the settings.	

Alarm No.: 8E		Name: USB communication error/serial communication error/Modbus RTU communication error					
Alarm content		· A communication error occurred between the servo amplifier and a personal computer/controller. · An error occurred in USB communication, serial communication (Mitsubishi Electric general-purpose AC servo protocol), or Modbus RTU communication.					
Detail No.	Detail name	Cause		Check method	Check result	Action	Target
8E.6	Modbus RTU communication receive error	(1)	The setting of the controller, servo amplifier, etc. is incorrect.	Check the setting of the controller, servo amplifier, etc. (such as communication protocol selection, baud rate, parity).	It is incorrect.	Review the settings.	[A]
					It is correct.	Check (2).	
		(2)	A communication cable is malfunctioning.	Check the communication cable, and then check the repeatability.	It is not repeatable.	Replace the communication cable.	
					It is repeatable.	Check (3).	
		(3)	The servo amplifier is malfunctioning.	Replace the servo amplifier, and then check the repeatability.	It is not repeatable.	Replace the servo amplifier.	
8E.7	Modbus RTU communication message frame error	(1)	The communication protocol is failure.	Check if transmission data conforms the communication protocol.	It is not conforming.	Modify the transmission data according to the communication protocol.	
					It is conforming.	Check (2).	
		(2)	The setting of the controller, servo amplifier, etc. is incorrect.	Check the setting of the controller, servo amplifier, etc. (such as communication protocol selection, baud rate, parity).	It is incorrect.	Review the settings.	
8E.8	Modbus RTU communication CRC error	Check it with the check method for [AL. 8E.7].					

Alarm No.: 88888		Name: Watchdog					
Alarm content		· [RJ010]: MR-J3-T10 came off. · A part such as CPU is malfunctioning.					
Detail No.	Detail name	Cause		Check method	Check result	Action	Target
88_/ 8888_	Watchdog	(1)	The MR-J3-T10 came off during the CC-Link IE communication.	Check if [AL. 74 Option card error 1] occurred with alarm history.	It is occurring.	Check it with the check method for [AL. 74].	[RJ010]
					It did not occur.	Check (2).	
		(2)	A part in the servo amplifier is failure.	Replace the servo amplifier, and then check the repeatability.	It is not repeatable.	Replace the servo amplifier.	[A] [B] [WB] [RJ010] [GF]

1.5 Remedies for warnings

⚠CAUTION

If [AL. E3 Absolute position counter warning] occurs, remove the cause of the warning, and always make home position setting again. Otherwise, it may cause an unexpected operation.

Point

When any of the following alarms has occurred, do not cycle the power of the servo amplifier repeatedly to restart. Doing so will cause a malfunction of the servo amplifier and servo motor. If the power of the servo amplifier is switched off/on during the alarms, allow more than 30 minutes for cooling before resuming operation.

- [AL. 91 Servo amplifier overheat warning]
- [AL. E0 Excessive regeneration warning]
- [AL. E1 Overload warning 1]
- [AL. E2 Servo motor overheat warning]
- [AL. EC Overload warning 2]

Warnings (except [AL. F0 Tough drive warning]) are not recorded in the alarm history.

If [AL. E6], [AL. E7], [AL. E9], [AL. EA], or [AL. EB] occurs, the amplifier will be the servo-off status. If any other warning occurs, operation can be continued but an alarm may take place or proper operation may not be performed.
Remove the cause of warning according to this section. Use MR Configurator2 to refer to the cause of warning occurrence.

Alarm No.: 90		Name: Home position return incomplete warning					
Alarm content		· A home position return did not complete normally with the positioning function.					
Detail No.	Detail name	Cause		Check method	Check result	Action	Target
90.1	Home position return incomplete	(1)	An automatic operation was executed at home position return incompletion.	Check if the home position return was not executed (the following devices are not off.). [A]: ZP (Home position return completion) [GF]: ZP2 (Home position return completion 2)	A home position return was not executed.	Execute a home position return.	[A] [GF]
					A home position return was executed.	Check (2).	
		(2)	A positioning operation was executed without home position setting with absolute position after [AL. 25 Absolute position erased] occurred.	Check if [AL. 25 Absolute position erased] occurred using alarm history.	[AL. 25 Absolute position erased] occurred.	Check the battery voltage and battery cable if they have a failure and execute a home position return after remove the failure.	
					[AL. 25 Absolute position erased] did not occur.	Check (3).	
		(3)	With the indexer method, [AL. E3 Absolute position counter warning] occurred simultaneously with the alarm.	Check if [AL. 90.1] occurred simultaneously with start of the positioning operation.	[AL. 90.1] did not occur simultaneously with start of the positioning operation but occurred during positioning operation.	Remove the cause of [AL. E3], and perform home position return. (Check it with the check method for [AL. E3].)	
					[AL. 90.1] occurred simultaneously with start of the positioning operation.	Check (4).	
		(4)	ZP (Home position return completion) turned off after the home position return was executed.	Check if ZP (Home position return completion) is off.	ZP (Home position return completion) is off.	Check the conditions if ZP (Home position return completion) can be off. (Refer to section 2.3 of "MR-J4-_A_-RJ Servo Amplifier Instruction Manual (Positioning Mode)")	[A]
		(5)	A software stroke limit/ stroke limit was detected.	In the I/O mode, check if [AL. 99 Stroke limit warning] occurred when "_ _ _ 1" is set to [Pr. PD12], or [AL. 98 Software stroke limit warning] occurred when "_ 1 _ _" is set to [Pr. PD12].	[AL. 98 Software stroke limit warning] or [AL. 99 Stroke limit warning] occurred in the I/O mode.	Move the machine to within the limit range, and then make a home position return. When the home position is fixed, enable servo-on again.	[GF]
					[AL. 98 Software stroke limit warning] or [AL 99 Stroke limit warning] did not occur. Or the motion mode is set.	Check (6).	
		(6)	ZP2 (Home position return completion 2) turned off after the home position return was executed.	Check if ZP2 (Home position return completion 2) is off.	ZP2 (Home position return completion 2) is off.	Check the conditions in which ZP2 (Home position return completion 2) is off. (□MR-J4-_GF_(-RJ) Servo Amplifier Instruction Manual (I/O Mode)	

Alarm No.: 90	Name: Home position return incomplete warning						
Alarm content	· A home position return did not complete normally with the positioning function.						
Detail No.	Detail name	Cause		Check method	Check result	Action	Target
90.2	Home position return abnormal termination	(1)	The proximity dog is not connected to DOG.	Check if the proximity dog is connected correctly.	It is not connected.	Connect it correctly.	[A] [GF]
					It is connected.	Check (2).	
		(2)	The stroke limit was detected after the home position return start.	Check if the stroke limit is connected correctly. Or check if the stroke limit is not reached.	The stroke limit is not connected. Or the stroke limit is reached.	Connect the stroke limit correctly. Review the stroke limit position.	
					The stroke limit is connected. Or the stroke limit is not reached.	Check (3).	
		(3)	A home position return speed did not decelerate to a creep speed.	Check if the proximity dog turned off before a home position return completed deceleration to a creep speed.	The proximity dog turned off before the deceleration to a creep speed.	Review the dog position. Or review the parameter values of the home position return speed, creep speed, and travel distance after proximity dog.	
		(4)	Deceleration from the home position return speed/creep speed to the home position failed at the indexer method.	Check if the home position was turned on before the deceleration from the home position return speed/creep speed to the home position was complete.	It was not turned on before the deceleration was complete.	Review the positional relationship of the stroke limit and home position. Or review the parameter values of the home position return speed, creep speed, deceleration time constant, and home position shift distance.	
90.5	Z-phase unpassed	(1)	The Z-phase signal was not detected normally.	Check if the Z-phase signal of the servo motor/ linear servo motor was detected normally.	The Z-phase signal was not detected.	Review the Z-phase signal and wirings.	
					The Z-phase signal was detected.	Check (2).	
		(2)	A home position return was executed while the servo motor did not pass the Z-phase.	Check if the motor passed the Z-phase signal until the proximity dog turned off after the home position return started.	The Z-phase was not turned on.	Review the setting position of the home position return start and proximity dog.	

Alarm No.: 91	Name: Servo amplifier overheat warning						
Alarm content	· The temperature inside of the servo amplifier reached a warning level.						
Detail No.	Detail name	Cause		Check method	Check result	Action	Target
91.1	Main circuit device overheat warning	(1)	Ambient temperature of the servo amplifier has exceeded 55 ℃.	Check the ambient temperature.	It is over 55 ℃.	Lower the ambient temperature.	[A] [B] [WB] [RJ010] [GF]
					It is less than 55 ℃.	Check (2).	
		(2)	The close mounting is out of specifications.	Check the specifications of close mounting.	It is out of specifications.	Use within the range of specifications.	

Alarm No.: 92		Name: Battery cable disconnection warning					
Alarm content		Battery voltage for absolute position detection system decreased.					
Detail No.	Detail name	Cause		Check method	Check result	Action	Target
92.1	Encoder battery cable disconnection warning	(1)	1) When an MR-BAT6V1SET(-A) battery or MR-BT6VCASE battery case was used, the battery was not connected to CN4. 2) When an MR-BAT6V1BJ battery for junction battery cable was used, the battery was not connected to both CN4 and MR-BT6VCBL03M junction battery cable.	Check if the battery is connected correctly.	It is not connected.	Connect it correctly.	[A] [B] [WB] [RJ010] [GF]
					It is connected.	Check (2).	
		(2)	A battery cable was disconnected.	Check if the battery cable is malfunctioning.	It has a failure.	Replace or repair the cable.	
					It has no failure.	Check (3).	
		(3)	The battery voltage is low. The battery is consumed.	Check the battery voltage with a tester. When an MR-BAT6V1BJ battery for junction battery cable was used, check the voltage of the connector (orange) for servo amplifier.	It is less than 3.1 V DC.	Replace the battery.	
					It is 3.1 V DC or more.	Check (4).	
		(4)	An encoder cable was disconnected.	Check if the encoder cable is disconnected.	It is disconnected.	Replace or repair the cable.	
92.3	Battery degradation	(1)	The battery voltage is low. The battery is consumed.	Check the battery voltage with a tester.	It is less than 3.0 V DC.	Replace the battery.	
					It is 3.0 V DC or more.	Check (2).	
		(2)	The battery has deteriorated.	Replace the battery, and then check the repeatability.	It is not repeatable.	Replace the battery.	

Alarm No.: 93		Name: ABS data transfer warning					
Alarm content		ABS data were not transferred.					
Detail No.	Detail name	Cause		Check method	Check result	Action	Target
93.1	ABS data transfer requirement warning during magnetic pole detection	(1)	The Z-phase was not turned on at servo-on.	Check if the position within one-revolution is "0".	It is "0". (The Z-phase was not turned on.)	Turn on the Z-phase and disable the magnetic pole detection. Always make home position setting again.	[A]
					It is other than "0". (The Z-phase was turned on.)	Check (2).	
		(2)	The magnetic pole detection was executed.	Check if the ABS data is transferred during the magnetic pole detection.	The ABS data is transferred.	Disable the magnetic pole detection. After that, cycle SON (Servo-on) and transfer the ABS data.	

Alarm No.: 95		Name: STO warning					
Alarm content		· STO input signal turns off while the servo motor stops. · A diagnosis of input devices was not executed. · The safety observation function was enabled in the test mode.					
Detail No.	Detail name	Cause		Check method	Check result	Action	Target
95.1	STO1 off detection	(1)	STO1 is not inputted correctly.	Check if the STO1 of CN8 connector is wired correctly.	It is not wired correctly.	Wire it correctly. (When not using the STO function, attach the short-circuit connector came with the servo amplifier to CN8.)	[A] [B] [WB] [RJ010] [GF]
					It is wired correctly.	Check (2).	
		(2)	STO1 was turned off (enabled) under the following speed conditions. 1) Servo motor speed: 50 r/min or less 2) Linear servo motor speed: 50 mm/s or less 3) Direct drive motor speed: 5 r/min or less	Check if STO1 is off (enabled).	It is off (enabled).	Turn on STO1 (disabled).	
95.2	STO2 off detection	(1)	STO2 is not inputted correctly.	Check if the STO2 of CN8 connector is wired correctly.	It is not wired correctly.	Wire it correctly. (When not using the STO function, attach the short-circuit connector came with the servo amplifier to CN8.)	
					It is wired correctly.	Check (2).	
		(2)	STO2 was turned off (enabled) under the following speed conditions. 1) Servo motor speed: 50 r/min or less 2) Linear servo motor speed: 50 mm/s or less 3) Direct drive motor speed: 5 r/min or less	Check if STO2 is off (enabled).	It is off (enabled).	Turn on STO2.	
95.3	STO warning 1 (safety observation function)	(1)	"Input device - Fixing-diagnosis execution selection at start-up" was not executed.	Check if "Input device - Fixing-diagnosis execution selection at start-up" was executed.	It was not executed.	Execute it.	[A] [B] [GF]
					It was executed.	Check (2).	
		(2)	Set "Input device - Fixing-diagnosis execution selection at start-up" correctly using parameters.	Check if [Pr. PSD27] and [Pr. PSD28] are set correctly.	It is not set correctly.	Review the parameter.	
					It is set correctly.	Check (3).	
		(3)	The wiring is incorrect.	Check if the wiring has a failure.	It has a failure.	Review the wiring.	
					It has no failure.	Check (4).	
		(4)	The functional safety unit is malfunctioning.	Replace the functional safety unit, and then check the repeatability.	It is not repeatable.	Replace the functional safety unit.	
					It is repeatable.	Check (5).	
		(5)	Something near the device caused it.	Check the noise, ambient temperature, etc.	There is a problem in the surrounding.	Take countermeasures against its cause.	

Alarm No.: 95		Name: STO warning					
Alarm content		· STO input signal turns off while the servo motor stops. · A diagnosis of input devices was not executed. · The safety observation function was enabled in the test mode.					
Detail No.	Detail name	Cause		Check method	Check result	Action	Target
95.4	STO warning 2 (safety observation function)	(1)	The test operation mode was not set correctly.	Check if the servo amplifier and functional safety unit are set to the test operation mode.	It is not set.	Set it correctly.	[A] [B] [WB] [RJ010] [GF]
					It is set.	Check (2).	
		(2)	An error occurred in the safety communication. Or the network is disconnected.	Check the description "The display shows "Ab"." ☞ Page 126 Trouble which does not trigger alarm/warning	It is not repeatable.	Take countermeasures against its cause.	
					It is repeatable.	Check (3).	
		(3)	"Input mode selection" in [Pr. PSA02 Functional safety unit setting] is not set correctly.	Set [Pr. PSA02] correctly and check the repeatability.	It is not repeatable.	Review the parameter.	
					It is repeatable.	Check (4).	
		(4)	A functional safety unit which is not compatible with the safety communication is connected.	Check the software version of the functional safety unit.	It is A1 or earlier.	Replace the functional safety unit with a one with software version A2 or later.	[GF]
					It is A2 or later.	Check (5).	
		(5)	The setting of [Pr. PSC04 Safety communication - Network communication selection] is incorrect.	Correct the setting of [Pr. PSC04] and check the repeatability.	It is not repeatable.	Review the parameter setting.	[B] [GF]
					It is repeatable.	Check (6).	
		(6)	The servo amplifier is malfunctioning.	Replace the servo amplifier, and then check the repeatability.	It is not repeatable.	Replace the servo amplifier.	[A] [B] [WB] [RJ010] [GF]
					It is repeatable.	Check (7).	
		(7)	The functional safety unit is malfunctioning.	Replace the functional safety unit, and then check the repeatability.	It is not repeatable.	Replace the functional safety unit.	
					It is repeatable.	Check (8).	
		(8)	Something near the device caused it.	Check the noise, ambient temperature, etc.	There is a problem in the surrounding.	Take countermeasures against its cause.	
95.5	STO warning 3 (safety observation function)	(1)	STO command/SS1 command of the functional safety unit was turned off (enabled) under the following speed conditions. 1) Servo motor speed: 50 r/min or less 2) Linear servo motor speed: 50 mm/s or less 3) Direct drive motor speed: 5 r/min or less	Check if STO command/SS1 command of the functional safety unit is off (enabled).	It is off (enabled).	Turn on (disabled) STO command/SS1 command of the functional safety unit.	

Alarm No.: 96	Name: Home position setting warning						
Alarm content	· Home position setting could not be made.						
Detail No.	Detail name	Cause		Check method	Check result	Action	Target
96.1	In-position warning at home positioning	(1)	INP (In-position) did not turn on within the specified time during home positioning.	Check the droop pulses during home positioning.	It is in-position range or more.	Adjust gains to set droop pulses within the In-position range. Remove the cause of droop pulse occurrence, and make home position setting.	[A] [B] [WB] [RJ010] [GF]
96.2	Command input warning at home positioning	(1)	A command has already inputted at the time of home positioning.	Check if a command is inputted at home positioning.	A command is inputted.	Set it after home positioning.	
					A command is not inputted.	Check (2).	
		(2)	Creep speed is high.	Decrease the creep speed, and then check the repeatability.	It is not repeatable.	Decelerate the creep speed, and make home position setting.	
96.3	Servo off warning at home positioning	(1)	A home positioning was executed during servo-off.	Check if the status is servo-off at home positioning.	It is servo-off.	Turn to servo-on, and then execute the home positioning.	[A]
96.4	Home positioning warning during magnetic pole detection	(1)	Z-phase was not turned on after servo-on.	Check if the Z-phase was turned on.	The Z-phase was not turned on.	Rotate the direct drive motor to turn on the Z-phase, and make home position setting.	[A] [GF]

Alarm No.: 97	Name: Positioning specification warning						
Alarm content	· How to specify a positioning is incorrect for the positioning function.						
Detail No.	Detail name	Cause		Check method	Check result	Action	Target
97.1	Program operation disabled warning	(1)	When using the positioning function, start a program with the program operation disabled.	Check if the power of the servo amplifier was cycled after the program was changed.	The power of the servo amplifier was not cycled.	Cycle the power of the servo amplifier.	[A]
97.2	Next station position warning	(1)	An abnormal value was specified to a signal input of the next station position specification and automatic operation was started.	Check if a number of stations per rotation ([Pr. PT28]) or more value was not specified to the next station position.	The number of stations per rotation ([Pr. PT28]) or more value was specified.	Review the parameter setting or next station position input signal.	
					The number of stations per rotation ([Pr. PT28]) or more value was not specified.	Check (2).	
		(2)	The power of the servo amplifier was not cycled after the number of stations per rotation ([Pr. PT28]) was changed.	Check if the power of the servo amplifier was cycled after the number of stations per rotation ([Pr. PT28]) was changed.	The power was not cycled.	Cycle the power of the servo amplifier.	

Alarm No.: 98		Name: Software limit warning					
Alarm content		· A software limit set with the parameter was reached for the positioning function.					
Detail No.	Detail name	Cause		Check method	Check result	Action	Target
98.1	Forward rotation-side software stroke limit reached	(1)	A software limit was set within the actual operation range.	Check if the parameter settings ([Pr. PT15] to [Pr. PT18]) to the operation range are correct.	The setting was out of operation range.	Set [Pr. PT15] to [Pr. PT18] correctly.	[A] [GF]
					The setting was within operation range.	Check (2).	
		(2)	A point table of the position data which exceeds the software limit was executed.	Check if the target position of the point data to the operation range was correct.	The setting was out of operation range.	Set the point table correctly.	
					The setting was within operation range.	Check (3).	
		(3)	A software limit was reached by using the JOG operation or manual pulse generator operation.	Check if the JOG operation or manual pulse generator operation was executed properly to the operation range.	It reached to the out of operation range.	Operate within the software limit. Adjust properly the parameters such as JOG speed and multiplication of the manual pulse as necessary.	
98.2	Reverse rotation-side software stroke limit reached	Check it with the check method for [AL. 98.1].					

Alarm No.: 99		Name: Stroke limit warning					
Alarm content		· The stroke limit signal is off.					
Detail No.	Detail name	Cause		Check method	Check result	Action	Target
99.1	Forward rotation stroke end off	(1)	The forward rotation stroke limit switch is connected to LSP.	Check if the limit switch is connected correctly.	It is not connected.	Connect it correctly.	[A] [GF]
					It is connected.	Check (2).	
		(2)	The forward rotation stroke end was exceeded during driving.	Check if the forward rotation stroke limit switch turned off.	It turned off.	Check operation pattern.	
99.2	Reverse rotation stroke end off	(1)	The reverse rotation stroke limit switch is connected to LSN.	Check if the limit switch is connected correctly.	It is not connected.	Connect it correctly.	
					It is connected.	Check (2).	
		(2)	The reverse rotation stroke end was exceeded during driving.	Check if the reverse rotation stroke limit switch turned off.	It turned off.	Check operation pattern.	
99.4	Upper stroke limit off	(1)	The upper stroke limit switch is not connected to FLS of the controller.	Check if the limit switch is connected correctly.	It is not connected.	Connect it correctly.	[GF]
					It is connected.	Check (2).	
		(2)	The upper stroke limit was exceeded during driving.	Check if the upper stroke limit switch turned off.	It turned off.	Check operation pattern.	
99.5	Lower stroke limit off	(1)	The lower stroke limit switch is not connected to RLS of the controller.	Check if the limit switch is connected correctly.	It is not connected.	Connect it correctly.	
					It is connected.	Check (2).	
		(2)	The lower stroke limit was exceeded during driving.	Check if the lower stroke limit switch turned off.	It turned off.	Check operation pattern.	

Alarm No.: 9A		Name: Optional unit input data error warning					
Alarm content		· The BCD input data setting is incorrect when MR-D01 extension IO unit is connected.					
Detail No.	Detail name	Cause		Check method	Check result	Action	Target
9A.1	Optional unit input data sign error	(1)	The MR-D01 extension IO unit is not connected.	Check if MR-D01 is connected correctly.	It is not connected.	Connect it correctly.	[A]
					It is connected.	Check (2).	
		(2)	Both of + and - signs are on or off.	Check the sign of the optional unit input data.	Both are on or both are off.	Turn on one of the signs only.	
					Only one of the signs is on.	Check (3).	
		(3)	The - sign is set at incremental value command.	Check the sign of the optional unit input data.	The - sign is set.	Set it to +.	
					The + sign is set.	Check (4).	
		(4)	The MR-D01 extension IO unit is malfunctioning.	Replace the MR-D01, and then check the repeatability.	It is not repeatable.	Replace the MR-D01.	
9A.2	Optional unit BCD input data error	(1)	Other than "0" to "9" is set in a digit.	Check the BCD input data.	A value out of range is set.	Set a value from "0" to "9".	

Alarm No.: 9B		Name: Error excessive warning					
Alarm content		· Droop pulses have exceeded the warning occurrence level.					
Detail No.	Detail name	Cause		Check method	Check result	Action	Target
9B.1	Excess droop pulse 1 warning	(1)	The servo motor power cable was disconnected.	Check the servo motor power cable.	It is disconnected.	Repair or replace the servo motor power cable.	[A] [B] [WB] [GF]
					It is not disconnected.	Check (2).	
		(2)	The connection of the servo motor is incorrect.	Check the wiring of U/V/W.	It is incorrect.	Connect it correctly.	
					It is correct.	Check (3).	
		(3)	The connection of the encoder cable is incorrect.	Check if the encoder cable is connected correctly.	It is incorrect.	Connect it correctly.	
					It is correct.	Check (4).	
		(4)	The torque limit has been enabled.	Check if the limiting torque is in progress.	The limiting torque is in progress.	Increase the torque limit value.	
					The limiting torque is not in progress.	Check (5).	
		(5)	A moving part collided against the machine.	Check if it collided.	It collided.	Check operation pattern.	
					It did not collide.	Check (6).	
		(6)	The torque is insufficient.	Check the peak load ratio.	The torque is saturated.	Reduce the load or review the operation pattern. Or use a larger capacity motor.	
					The torque is not saturated.	Check (7).	
		(7)	Power supply voltage dropped.	Check the bus voltage value.	The bus voltage is low.	Check the power supply voltage and power supply capacity.	
					The bus voltage is high.	Check (8).	
		(8)	Acceleration/ deceleration time constant is too short.	Set a longer deceleration time constant, and then check the repeatability.	It is not repeatable.	Increase the acceleration/deceleration time constant.	
					It is repeatable.	Check (9).	

Alarm No.: 9B		Name: Error excessive warning					
Alarm content		· Droop pulses have exceeded the warning occurrence level.					
Detail No.	Detail name	Cause		Check method	Check result	Action	Target
9B.1	Excess droop pulse 1 warning	(9)	The position loop gain is small.	Increase the position loop gain, and then check the repeatability.	It is not repeatable.	Increase the position loop gain ([Pr. PB08]).	[A] [B] [WB] [GF]
					It is repeatable.	Check (10).	
		(10)	Servo motor shaft was rotated by external force./The moving part of the linear servo motor was moved by external force.	Measure the actual position under the servo-lock status.	It is rotated by external force./It was moved by external force.	Review the machine.	
					It is not rotated by external force./It was not moved by external force.	Check (11).	
		(11)	An encoder is malfunctioning.	Replace the servo motor, and then check the repeatability.	It is not repeatable.	Replace the servo motor.	
9B.3	Excess droop pulse 2 warning	Check it with the check method for [AL. 9B.1].					
9B.4	Error excessive warning during 0 torque limit	(1)	The torque limit has been 0.	Check the torque limit value.	The torque limit has been 0.	Do not input a command while the torque limit value is 0.	[A] [B] [WB] [GF]

Alarm No.: 9C		Name: Converter warning					
Alarm content		· A warning occurred in the converter unit during the servo-on.					
Detail No.	Detail name	Cause		Check method	Check result	Action	Target
9C.1	Converter unit warning	(1)	A warning occurred in the converter unit during the servo-on.	Check the warning of the converter unit, and take the action following the remedies for warnings of the converter unit.			[A] [B]

Alarm No.: 9D		Name: CC-Link IE warning 1					
Alarm content		· The station No. switch setting was changed after power-on. · The station No. setting differs from that of master station.					
Detail No.	Detail name	Cause		Check method	Check result	Action	Target
9D.1	Station number switch change warning	(1)	The station No. switch setting was changed after power-on.	Check if the switch was changed.	It was changed.	Restore the setting. Do not change the station No. switch after power-on.	[RJ010]
					It was not changed.	Check (2).	
		(2)	The servo amplifier is malfunctioning.	Replace the servo amplifier, and then check the repeatability.	It is not repeatable.	Replace the servo amplifier.	

Alarm No.: 9D		Name: CC-Link IE warning 1					
Alarm content		· The station No. switch setting was changed after power-on. · The station No. setting differs from that of master station.					
Detail No.	Detail name	Cause		Check method	Check result	Action	Target
9D.2	Master station setting warning	(1)	When MR-D30 is used to perform safety communication, the servo amplifier and MR-D30 are not connected correctly.	Check the connection of the servo amplifier to MR-D30.	It is not connected.	Connect it correctly.	[GF]
					Safety communication is not performed. Or the servo amplifier is connected to MR-D30 correctly.	Check (2).	
		(2)	The settings of the station type or cyclic points on the master station side do not match those on the servo amplifier side.	Check the setting of the master station and the servo amplifier.	The setting is incorrect.	Review the setting on the master station side.	[RJ010] [GF]
9D.3	Overlapping station number warning	(1)	The same station No. as other station was set.	Check devices on the network if station Nos. are overlapped.	They are overlapped.	Review the settings of the station Nos.	
9D.4	Mismatched station number warning	(1)	The station No. controlled on master side differs from that set on slave side.	Check the station No. on master side and slave side if they are matched together.	They are not matched.	Review the settings of the station Nos.	

Alarm No.: 9E		Name: CC-Link IE warning 2					
Alarm content		· The receive data of the CC-Link IE communication is abnormal.					
Detail No.	Detail name	Cause		Check method	Check result	Action	Target
9E.1	CC-Link IE warning	(1)	MR-J4-_GF_(-RJ) servo amplifier set for CC-Link IE Field Network is connected to the network of CC-Link IE Field Network Basic.	Check the combination of the slide switches of the servo amplifier.	The combination of the slide switches (SW1-1/SW1-2) are set for CC-Link IE Field Network. SW1-1: OFF (down) SW1-2: OFF (down)	Set the combination of the slide switches (SW1-1/SW1-2) for CC-Link IE Field Network Basic. SW1-1: OFF (down) SW1-2: ON (up)	[GF]
		(2)	The transmission status of the CC-Link IE communication is abnormal.	Check the noise, ambient temperature, etc.	It has a failure.	Take countermeasures against its cause.	[RJ010] [GF]
					It has no failure.	Check (3).	
		(3)	The Ethernet cable was disconnected.	Check the Ethernet cable connection.	It is disconnected.	Turn off the control circuit power supply of the servo amplifier, and then connect the Ethernet cable.	
					It is connected.	Check (4).	
		(4)	The wiring of the Ethernet cable was incorrect.	Check if the wiring of Ethernet cable is correct.	The wiring is incorrect.	Wire it correctly.	
					The wiring is correct.	Check (5).	
		(5)	An Ethernet cable was disconnected.	Check if the Ethernet cable is malfunctioning.	It has a failure.	Replace the Ethernet cable.	
					It has no failure.	Check (6).	
		(6)	Communication with the master station is abnormal.	Check the setting of [Pr. Po02] and [Pr. Po03].	The setting value is incorrect.	Review the communication settings.	[RJ010]
					The setting value is correct.	Check (7).	
		(7)	The master station is malfunctioning.	Check if the master station is malfunctioning.	It has a failure.	Replace the master station.	[RJ010] [GF]

Alarm No.: 9F		Name: Battery warning					
Alarm content		· Battery voltage for absolute position detection system decreased.					
Detail No.	Detail name	Cause		Check method	Check result	Action	Target
9F.1	Low battery	(1)	The battery is not connected to CN4.	Check if the battery is connected correctly.	It is not connected.	Connect it correctly.	[A] [B] [WB] [RJ010] [GF]
					It is connected.	Check (2).	
		(2)	The battery voltage is low. The battery is consumed.	Check the battery voltage with a tester. When an MR-BAT6V1BJ battery for junction battery cable was used, check the voltage of the connector (orange) for servo amplifier.	It is less than 4.9 V DC.	Replace the battery.	
9F.2	Battery degradation warning	(1)	The absolute position storage unit has not connected.	Check if the absolute position storage unit is connected correctly.	It is not connected.	Connect it correctly.	[A] [B] [WB] [GF]

Alarm No.: E0		Name: Excessive regeneration warning					
Alarm content		· There is a possibility that regenerative power may exceed permissible regenerative power of built-in regenerative resistor or regenerative option.					
Detail No.	Detail name	Cause		Check method	Check result	Action	Target
E0.1	Excessive regeneration warning	(1)	The regenerative power exceeded 85% of the permissible regenerative power of the built-in regenerative resistor or regenerative option.	Check the effective load ratio.	It is 85% or more.	Reduce the frequency of positioning. Increase the deceleration time constant. Reduce the load. Use a regenerative option if it is not being used.	[A] [B] [WB] [RJ010] [GF]

Alarm No.: E1		Name: Overload warning 1					
Alarm content		[AL. 50 Overload 1] or [AL. 51 Overload 2] can occur.					
Detail No.	Detail name	Cause		Check method	Check result	Action	Target
E1.1	Thermal overload warning 1 during operation	(1)	The load was over 85% to the alarm level of [AL. 50.1 Thermal overload error 1 during operation].	Check it with the check method for [AL. 50.1].			[A] [B] [WB] [RJ010] [GF]
E1.2	Thermal overload warning 2 during operation	(1)	The load was over 85% to the alarm level of [AL. 50.2 Thermal overload error 2 during operation].	Check it with the check method for [AL. 50.2].			
E1.3	Thermal overload warning 3 during operation	(1)	The load was over 85% to the alarm level of [AL. 51.1 Thermal overload error 3 during operation].	Check it with the check method for [AL. 51.1].			
E1.4	Thermal overload warning 4 during operation	(1)	The load was over 85% to the alarm level of [AL. 50.3 Thermal overload error 4 during operation].	Check it with the check method for [AL. 50.3].			
E1.5	Thermal overload error 1 during a stop	(1)	The load was over 85% to the alarm level of [AL. 50.4 Thermal overload error 1 during a stop].	Check it with the check method for [AL. 50.4].			
E1.6	Thermal overload error 2 during a stop	(1)	The load was over 85% to the alarm level of [AL. 50.5 Thermal overload error 2 during a stop].	Check it with the check method for [AL. 50.5].			
E1.7	Thermal overload error 3 during a stop	(1)	The load was over 85% to the alarm level of [AL. 51.2 Thermal overload error 3 during operation].	Check it with the check method for [AL. 51.2].			
E1.8	Thermal overload error 4 during a stop	(1)	The load was over 85% to the alarm level of [AL. 50.6 Thermal overload error 4 during a stop].	Check it with the check method for [AL. 50.6].			

Alarm No.: E2		Name: Servo motor overheat warning					
Alarm content		[AL. 46.2 Abnormal temperature of servo motor 2] can occur.					
Detail No.	Detail name	Cause		Check method	Check result	Action	Target
E2.1	Servo motor temperature warning	(1)	The temperature of the linear servo motor or direct drive motor reached 85% of the occurrence level of [AL. 46.2 Abnormal temperature of servo motor 2].	Check it with the check method for [AL. 46.2].			[A] [B] [WB] [GF]

Alarm No.: E3	Name: Absolute position counter warning						
Alarm content	· The multi-revolution counter value of the absolute position encoder exceeded the maximum range. · Absolute position encoder pulses are faulty. · An update cycle is short for writing multi-revolution counter value of the absolute position encoder to EEP-ROM.						
Detail No.	Detail name	Cause		Check method	Check result	Action	Target
E3.1	Multi-revolution counter travel distance excess warning	(1)	The travel distance from the home position is 32768 rev or more in the absolute position system.	Check the value of the multi-revolution counter.	It is 32768 rev or more.	Review operation range. Execute the home position return again. After the power is surely cycled, perform home position return again.	[A] [GF]
E3.2	Absolute position counter warning	(1)	Something near the device caused it.	Check the noise, ambient temperature, etc.	There is a problem in the surrounding.	Take countermeasures against its cause. After the power is surely cycled, perform home position return again.	[A] [B] [WB] [RJ010] [GF]
					There is no problem in the surrounding.	Check (2).	
		(2)	An encoder is malfunctioning.	Replace the servo motor, and then check the repeatability.	It is not repeatable.	Replace the servo motor.	
E3.4	Absolute positioning counter EEP-ROM writing frequency warning	(1)	A home position was renewed (EEP-ROM write) twice or more in 10 minutes in the servo amplifier due to rotation to the same direction in short time in the point table method of the positioning mode, degree setting with the program method, or the indexer method.	Check if the operation was within the following conditions between the number of gear teeth on machine side ([Pr. PA06] CMX) and servo motor speed (N). • When CMX ≤ 2000, N < 3076.7 r/min • When CMX > 2000, N < 3276.7 - (CMX × 0.1) r/min • When (CMX/CDV) is reduced to its lowest terms, CMX ≤ 15900	The operation was out of conditions.	Set the command speed within the conditions. Set the number of gear teeth on machine side within the conditions. After the power is surely cycled, perform home position return again.	[A] [GF]
E3.5	Encoder absolute positioning counter warning	Check it with the check method for [AL. E3.2].					

Alarm No.: E4	Name: Parameter warning						
Alarm content	· Out of the setting range was attempted to write during parameter writing.						
Detail No.	Detail name	Cause		Check method	Check result	Action	Target
E4.1	Parameter setting range error warning	(1)	A parameter was set to out of range with the servo system controller.	Check the parameter setting value set with the servo system controller.	It is out of setting range.	Set it within the range.	[B] [WB] [RJ010]

Alarm No.: E5	Name: ABS time-out warning						
Alarm content	· A response from the programmable controller was over 5 s at the absolute position erased data transfer. · ABSM (ABS transfer mode) turned off during the absolute position erased data transfer. · SON (Servo-on), RES (Reset), or EM2/EM1 (Forced stop) turned off during the absolute position erased data transfer.						
Detail No.	Detail name	Cause		Check method	Check result	Action	Target
E5.1	Time-out during ABS data transfer	(1)	The wiring of I/O signals is incorrect.	Check if the I/O signal wire is disconnected or connected loosely.	It has a failure.	Repair or replace the I/O signal wire.	[A]
					It has no failure.	Check (2).	
		(2)	The sequence program is incorrect.	Check the sequence program.	The sequence program is incorrect.	Modify the sequence program.	
E5.2	ABSM off during ABS data transfer	Check it with the check method for [AL. E5.1].					
E5.3	SON off during ABS data transfer						

Alarm No.: E6	Name: Servo forced stop warning						
Alarm content	· EM2/EM1 (Forced stop) turned off. · SS1 command was inputted.						
Detail No.	Detail name	Cause		Check method	Check result	Action	Target
E6.1	Forced stop warning	(1)	EM2/EM1 (Forced stop) turned off.	Check the status of EM2/EM1.	It is off.	Ensure safety and turn on EM2/EM1 (Forced stop).	[A] [B] [WB] [RJ010] [GF]
					It is on.	Check (2).	
		(2)	The external 24 V DC power supply is off.	Check if the external 24 V DC power supply is inputted.	It is not inputted.	Input the 24 V DC power supply.	
					It is inputted.	Check (3).	
		(3)	The servo amplifier is malfunctioning.	Replace the servo amplifier, and then check the repeatability.	It is not repeatable.	Replace the servo amplifier.	
E6.2	SS1 forced stop warning 1 (safety observation function)	(1)	The SS1 command is off (enabled).	Check if the SS1 command is off (enabled).	The SS1 command is off (enabled).	Turn on the SS1 input (disabled).	[A] [B] [GF]
		(2)	An external 24 V DC is not inputted to the functional safety unit.	Check if an external 24 V DC is inputted to the functional safety unit.	It is not inputted.	Input the 24 V DC power supply.	
					It is inputted.	Check (3).	
		(3)	The functional safety unit is malfunctioning.	Replace the functional safety unit, and then check the repeatability.	It is not repeatable.	Replace the functional safety unit.	
E6.3	SS1 forced stop warning 2 (safety observation function)	(1)	An error occurred in the safety communication.	Check the description "The display shows "Ab".". ☞ Page 126 Trouble which does not trigger alarm/warning	It is not repeatable.	Take countermeasures against its cause.	

Alarm No.: E7		Name: Controller forced stop warning					
Alarm content		· The forced stop signal of the servo system controller was enabled.					
Detail No.	Detail name	Cause		Check method	Check result	Action	Target
E7.1	Controller forced stop input warning	(1)	The forced stop signal of the servo system controller was inputted.	Check if the servo system controller is a forced stop status.	It is the forced stop status.	Ensure safety and cancel the forced stop signal of the controller.	[B] [WB] [RJ010]
		(2)	The forced stop signal of the controller was inputted with Modbus RTU communication.	Check if the controller is in a forced stop status.	It is the forced stop status.	Ensure safety and cancel the forced stop signal of the controller.	[A]

Alarm No.: E8		Name: Cooling fan speed reduction warning					
Alarm content		· The cooling fan speed decreased to the warning occurrence level or less.					
Detail No.	Detail name	Cause		Check method	Check result	Action	Target
E8.1	Decreased cooling fan speed warning	(1)	Foreign matter was caught in the cooling fan.	Check if a foreign matter is caught in the cooling fan.	Something has been caught.	Remove the foreign matter.	[A] [B] [WB] [RJ010] [GF]
					Nothing has been caught.	Check (2).	
		(2)	Cooling fan life expired.	Check the total of power on time of the servo amplifier.	It exceed the cooling fan life.	Replace the servo amplifier.	
E8.2	Cooling fan stop	Check it with the check method for [AL. E8.1].					

Alarm No.: E9		Name: Main circuit off warning					
Alarm content		· The servo-on command was inputted with main circuit power supply off. · The bus voltage dropped during the servo motor driving under 50 r/min.					
Detail No.	Detail name	Cause		Check method	Check result	Action	Target
E9.1	Servo-on signal on during main circuit off	(1)	The main circuit power supply is off. For the drive unit, the power supply of the converter unit is off.	Check if the main circuit power supply is inputted. Check if the power supply of the converter unit is inputted.	It is not inputted.	Turn on the main circuit power.	[A] [B] [WB] [RJ010] [GF]
					It is inputted.	Check (2).	
		(2)	The wiring between P3 and P4 was disconnected. For the drive unit, the wiring between P1 and P2 of the converter unit was disconnected.	Check the wiring between P3 and P4. Check the wiring between P1 and P2 of the converter unit.	It is disconnected.	Connect it correctly.	
					It is connected.	Check (3).	
		(3)	The main circuit power supply wiring was disconnected. For the drive unit, the main circuit power supply wiring of the converter unit was disconnected.	Check the main circuit power supply wiring. Check the main circuit power supply wiring of the converter unit.	It is disconnected.	Connect it correctly.	
					It has no failure.	Check (4).	
		(4)	For the drive unit, the magnetic contactor control connector of the converter unit was disconnected.	Check the magnetic contactor control connector of the converter unit.	It is disconnected.	Connect it correctly.	
					It has no failure.	Check (5).	
		(5)	For the drive unit, the bus bar between the converter unit and drive unit was disconnected.	Check the bus bar between the converter unit and drive unit.	It is disconnected.	Connect it correctly.	
					It has no failure.	Check (6).	

Alarm No.: E9	Name: Main circuit off warning						
Alarm content	· The servo-on command was inputted with main circuit power supply off. · The bus voltage dropped during the servo motor driving under 50 r/min.						
Detail No.	Detail name	Cause		Check method	Check result	Action	Target
E9.1	Servo-on signal on during main circuit off	(6)	The setting value of [Pr. PA02 Magnetic contactor drive output selection] contradicts the wiring constitution.	Check the [Pr. PA02] setting and the wiring constitution.	The setting or wiring is incorrect.	Review the setting of [Pr. PA02].	[A] [B] [WB] [RJ010] [GF]
					The setting and wiring are correct.	Check (7).	
		(7)	For the MR-J4-03A6(-RJ) or MR-J4W2-0303B6 servo amplifier, 24 V DC input is not selected even though 24 V DC input is used.	Check the parameter setting. MR-J4-03A6(-RJ): [Pr. PC27] MR-J4W2-0303B6: [Pr. PC05]	The setting is incorrect.	Set it correctly.	
					The setting is correct.	Check (8).	
		(8)	The bus voltage is low.	Check if the bus voltage is lower than the prescribed value. 200 V class: 215 V DC 400 V class: 430 V DC 100 V class: 215 V DC 48 V DC setting: 38 V DC 24 V DC setting: 18 V DC	The voltage is lower than the prescribed value.	Review the wiring. Check the power supply capacity.	
					The voltage is equal to or higher than the prescribed value.	Check (9).	
		(9)	The servo amplifier is malfunctioning.	Replace the servo amplifier, and then check the repeatability.	It is not repeatable.	(10) Replace the servo amplifier.	
		(10)	For the drive unit, the converter unit is malfunctioning.	Replace the converter unit, and then check the repeatability.	It is not repeatable.	Replace the converter unit.	
E9.2	Bus voltage drop during low speed operation	(1)	The bus voltage dropped during the servo motor driving under 50 r/min.	Check the bus voltage.	It is lower than the prescribed value. 200 V class: 200 V DC 400 V class: 430 V DC 100 V class: 200 V DC 48 V DC setting: 35 V DC 24 V DC setting: 15 V DC	Review the power supply capacity. Increase the acceleration time constant.	
E9.3	Ready-on signal on during main circuit off	Check it with the check method for [AL. E9.1].					
E9.4	Converter unit forced stop	(1)	The forced stop of the converter unit is enabled during the servo-on command.	Check if the forced stop of the converter unit is enabled.	It is enabled.	Deactivate the forced stop of the converter unit.	[A] [B]
					It is not enabled.	Check (2).	
		(2)	The protection coordination cable is not correctly connected.	Check the protection coordination cable.	It is not connected.	Connect the protection coordination cable correctly.	

Alarm No.: EA	Name: ABS servo-on warning						
Alarm content	· The servo-on was not enabled within 1 s after ABSM (ABS transfer mode) was turned on.						
Detail No.	Detail name	Cause		Check method	Check result	Action	Target
EA.1	ABS servo-on warning	(1)	The wiring of I/O signals is incorrect.	Check if the I/O signal wire is disconnected or connected loosely.	It has a failure.	Repair or replace the I/O signal wire.	[A]
					It has no failure.	Check (2).	
		(2)	The sequence program is incorrect.	Check the sequence program.	The sequence program is incorrect.	Modify the sequence program.	

Alarm No.: EB		Name: The other axis error warning					
Alarm content		· An alarm, which stops all axes, such as [AL. 24 Main circuit error] or [AL. 32 Overcurrent] occurred in other axis. · "All alarms" of "Target alarm selection of the other axis error warning" is selected in [Pr. PF02].					
Detail No.	Detail name	Cause		Check method	Check result	Action	Target
EB.1	The other axis error warning	(1)	[AL. 24] occurred at other axis.	Check if [AL. 24] is occurring at other axis.	It is occurring.	Eliminate the cause of [AL. 24] on the other axis side.	[WB]
					It did not occur.	Check (2).	
		(2)	[AL. 32] occurred at other axis.	Check if [AL. 32] is occurring at other axis.	It is occurring.	Eliminate the cause of [AL. 32] on the other axis side.	
					It did not occur.	Check (3).	
		(3)	"All alarms" of "Target alarm selection of the other axis error warning" is selected in [Pr. PF02].	Check the [Pr. PF02] setting.	"All alarms" is selected.	Remove the cause of the occurring alarm at other axis.	

Alarm No.: EC		Name: Overload warning 2					
Alarm content		· Operations over rated output were repeated while the servo motor shaft was not rotated.					
Detail No.	Detail name	Cause		Check method	Check result	Action	Target
EC.1	Overload warning 2	(1)	The load is too large or the capacity is not enough.	Check the effective load ratio.	The effective load ratio is high.	Reduce the load. Replace the servo motor with the one of larger capacity.	[A] [B] [WB] [RJ010] [GF]

Alarm No.: ED		Name: Output watt excess warning					
Alarm content		· The status, in which the output wattage (speed × torque) of the servo motor exceeded the rated output, continued steadily.					
Detail No.	Detail name	Cause		Check method	Check result	Action	Target
ED.1	Output watt excess warning	(1)	The status, in which the output wattage (speed × torque or thrust) of the servo motor exceeded 120% of the rated output (continuous thrust), continued steadily.	Check the servo motor speed and torque, or check the motor speed and thrust.	The output wattage is 120% of rating.	Reduce the servo motor speed. Reduce the load.	[A] [B] [WB] [RJ010] [GF]

Alarm No.: F0		Name: Tough drive warning					
Alarm content		· Tough drive function was activated.					
Detail No.	Detail name	Cause		Check method	Check result	Action	Target
F0.1	Instantaneous power failure tough drive warning	(1)	The voltage of the control circuit power supply has dropped.	Check it with the check method for [AL. 10.1].			[A] [B] [WB] [RJ010] [GF]
F0.3	Vibration tough drive warning	(1)	The setting value of the machine resonance suppression filter was changed due to a machine resonance.	Check if it was changed frequently.	It was changed frequently.	Set the machine resonance suppression filter. Check the machine status if screws are loose or the like.	

Alarm No.: F2	Name: Drive recorder - Miswriting warning						
Alarm content	A waveform measured by the drive recorder function was not recorded.						
Detail No.	Detail name	Cause		Check method	Check result	Action	Target
F2.1	Drive recorder - Area writing time-out warning	(1)	The Flash-ROM is malfunctioning.	Disconnect the cables except for the control circuit power supply, and then check the repeatability.	It is repeatable.	Replace the servo amplifier.	[A] [B] [WB] [RJ010] [GF]
F2.2	Drive recorder - Data miswriting warning	(1)	Data were not written to the drive recorder area.	Check if clearing alarm history disables this alarm with MR Configurator2.	It is not canceled.	Replace the servo amplifier.	

Alarm No.: F3	Name: Oscillation detection warning					
Alarm content	[AL. 54 Oscillation detection] can occur.					
Detail No.	Detail name	Cause	Check method	Check result	Action	Target
F3.1	Oscillation detection warning	Check it with the check method for [AL. 54.1].				

Alarm No.: F4	Name: Positioning warning						
Alarm content	Target position or acceleration time constant/deceleration time constant was set out of setting range.						
Detail No.	Detail name	Cause		Check method	Check result	Action	Target
F4.4	Target position setting range error warning	(1)	A target position was set out of setting range.	Check the setting value of the target position.	It is out of setting range.	Set the target position correctly, and cancel the warning (turn on C_ORST).	[Others]
F4.6	Acceleration time constant setting range error warning	(1)	The acceleration time constant or the deceleration time constant was set out of setting range.	Check the setting value of the acceleration time constant ([Pr. PT49]) and the deceleration time constant ([Pr. PT50]).	It is out of setting range.	Set the acceleration time constant and the deceleration time constant correctly, and cancel the warning (turn on ORST).	[GF]
F4.7	Deceleration time constant setting range error warning	(1)	Check it with the check method for [AL. F4.6].				
F4.9	Home position return type error warning	(1)	A home position return type was set out of setting range.	Check the setting value ([Pr. PT45]) of the home position return type.	It is not corresponding to a value for the home position return type.	Set the home position return type correctly, and cancel the warning (turn on ORST).	[GF]

Alarm No.: F5		Name: Simple cam function - Cam data miswriting warning					
Alarm content		The cam data written by MR Configurator2 is not written to a Flash-ROM.					
Detail No.	Detail name	Cause		Check method	Check result	Action	Target
F5.1	Cam data - Area writing time-out warning	(1)	The Flash-ROM is malfunctioning.	Disconnect the cables except for the control circuit power supply, and then check the repeatability.	It is repeatable.	Replace the servo amplifier.	[A] [GF]
F5.2	Cam data - Miswriting warning	(1)	The cam data was not written.	After the power is cycled, perform writing, and check the repeatability again. When the cam data is initialized, perform writing, and check the repeatability again. • Section 7.2.9 [Pr. PT34] of "MR-J4-_A_-RJ Servo Amplifier Instruction Manual (Positioning Mode)" [□]MR-J4-_GF_(-RJ) Servo Amplifier Instruction Manual (I/O Mode) • Section 7.2.4 [Pr. PT34] of "MR-J4-_GF_(-RJ) SERVO AMPLIFIER INSTRUCTION MANUAL (CC-Link IE Field Network Basic)"	It is repeatable.	Replace the servo amplifier.	
F5.3	Cam data checksum error	(1)	When the power is switched on after the cam data is written, a checksum of the cam data does not match. (Error occurred in cam data.)	Check if an error occurred (such as entered noise, power-off) at cam data write.	It has a failure.	After writing the cam data again, cycle the power.	
					It has no failure.	Check (2).	
		(2)	When the cam control command is turned on after the temporal writing of cam data, a checksum of the cam data does not match. (Error occurred in cam data.)	Check if an error occurred (such as entered noise) at temporal writing of cam data.	It has a failure.	After performing the temporal writing of cam data again, turn on the cam control command.	
					It has no failure.	Check (3).	
		(3)	The Flash-ROM is malfunctioning.	Replace the servo amplifier, and then check the repeatability.	It is not repeatable.	Replace the servo amplifier.	

Alarm No.: F6	Name: Simple cam function - Cam control warning						
Alarm content	· The cam axis position restoration at a time of cam control start was a failure. · The cam control is not normal.						
Detail No.	Detail name	Cause		Check method	Check result	Action	Target
F6.1	Cam axis one cycle current value restoration failed	(1)	The cam axis one cycle current value corresponding to the feed current value at cam control start cannot be restored. (It occurs in a reciprocating motion pattern of the cam.)	Check if the feed current value is within the stroke in a reciprocating motion pattern of the cam.	The feed current value is the outside of the stroke.	Move the feed current value to within the stroke in a reciprocating motion pattern of the cam. Or set the cam standard position within the stroke in a reciprocating motion pattern of the cam.	[A] [GF] -
F6.2	Cam axis feed current value restoration failed	(1)	The difference (command unit) between the restored cam axis feed current value and the command position at cam control start is bigger than "in-position range".	Check if the difference (command unit) between the restored cam axis feed current value and the command position at cam control start is in the "in-position range".	The difference of the command position (command unit) is not within "in-position range".	Calculate the cam axis feed current value to be restored, move the command position to the position, and then start the cam control. (For the calculation method, refer to the following. • Section 12.1.7 (2) of "MR-J4-_A_-RJ Servo Amplifier Instruction Manual (Positioning Mode)" [□]MR-J4-_GF_(-RJ) Servo Amplifier Instruction Manual (I/O Mode)) • Section 9.5.7 (2) of "MR-J4-_GF_(-RJ) SERVO AMPLIFIER INSTRUCTION MANUAL (CC-Link IE Field Network Basic)" Or set a larger setting value to "in-position range" when the setting value is extremely small, such as 0.	
F6.3	Cam unregistered error	(1)	Cam data has never been written.	Check if the cam data was written.	It was not written.	Write the cam data.	
					It was written.	Check (2).	
		(2)	The cam data of the specified cam No. was not written.	Check if the cam data of the specified cam No. was written.	It was not written.	Write the cam data of the specified cam No.	
					It was written.	Check (3).	
		(3)	Cam data has changed due to a servo amplifier malfunction.	Replace the servo amplifier, and then check the repeatability.	It is not repeatable.	Replace the servo amplifier.	
F6.4	Cam control data setting range error	(1)	An out of range value is set to the cam control data.	Check the setting of the cam control data.	The setting is incorrect.	Set it correctly.	
F6.5	Cam No. external error	(1)	An out of range value is set to the cam No.	Check the setting of the cam No.	The setting is incorrect.	Set it correctly.	

Alarm No.: F6		Name: Simple cam function - Cam control warning					
Alarm content		· The cam axis position restoration at a time of cam control start was a failure. · The cam control is not normal.					
Detail No.	Detail name	Cause		Check method	Check result	Action	Target
F6.6	Cam control inactive	(1)	After cam data was written, the cam control command was turned on without cycling the power.	Check if the power was cycled after the cam data was written.	The power was not cycled.	Cycle the power.	[A] [GF]
					The power was cycled.	Check (2).	
		(2)	After the cam control command was turned on, the servo-on was turned on.	Check if the cam control command was turned on during servo-on.	The cam control command was not turned on during servo-on.	Turn on the cam control command during servo-on.	
					The cam control command was turned on during servo-on.	Check (3).	
		(3)	The cam control command was turned on during servo motor driving, and the servo motor stopped.	Check if the cam control command was turned on while the travel completion was on.	The cam control command was not turned on while the travel completion was on.	Turn on the cam control command while the travel completion was on.	
					The cam control command was turned on while the travel completion was on.	Check (4).	
		(4)	The cam control command was turned on at the time of incompletion of home position return.	Check if the home position return completion is on.	The home position return completion is off.	Make a home position return, and turn on the cam control command.	
					The home position return completion is on.	Check (5).	
		(5)	It became servo-off during cam control.	Check if it is servo-off.	It is servo-off.	After servo-on, turn on the cam control command again.	
					It is servo-on.	Check (6).	
		(6)	A home position is erased during cam control.	Check if the home position return completion is off.	The home position return completion is off.	After the home position return completion, turn on the cam control command again.	
					The home position return completion is on.	Check (7).	
		(7)	It is stopped at a software limit during cam control.	Check if a software limit is reached.	A software limit is reached.	After it is retracted from the position of a software limit, turn on the cam control command again.	
					A software limit is not reached.	Check (8).	
		(8)	It is stopped at a stroke limit during cam control.	Check if a stroke limit is reached.	A stroke limit is reached.	After it is retracted from the position of a stroke limit, turn on the cam control command again.	

Alarm No.: F7		Name: Machine diagnosis warning					
Alarm content		There is a possibility that the equipment connected with the servo motor is malfunctioning.					
Detail No.	Detail name	Cause		Check method	Check result	Action	Target
F7.1	Vibration failure prediction warning	(1)	The servo system is unstable and oscillating.	Check if the gain is changed after the vibration failure prediction function is enabled.	The gain was changed.	Adjust the servo gain with the auto tuning. Set the machine resonance suppression filter.	[GF]
					The gain was not changed.	Check (2).	
		(2)	The vibration during servo motor operation increased because of deterioration of equipment parts.	Check that the vibration level during servo motor operation increased from that during the initial operation.	The vibration level during servo motor operation increased by 5% or lower from that during the initial operation.	Set a larger threshold multiplication for vibration failure prediction ([Pr. PF40] "_ _ x _") and restart the equipment.	
					The vibration level during servo motor operation increased by 5% or higher from that during the initial operation.	Check and maintain the equipment and replace parts as necessary.	
F7.2	Friction failure prediction warning	(1)	Changes in environment affected equipment friction.	Check that environment conditions such as ambient temperature has been changed from that of the initial operation.	The usage environment has been changed.	Reset the threshold to set a new one.	
					The usage environment is not changed.	Check (2).	
		(2)	Deterioration of equipment parts affected equipment friction.	Check that the friction torque at rated speed has been changed from that of the initial operation.	The friction torque at rated speed is not changed from that of the initial operation.	Set a larger threshold multiplication for friction failure prediction ([Pr. PF40] "_ _ _ x") and restart the equipment.	
					The friction torque at rated speed has been changed from that of the initial operation.	Check and maintain the equipment and replace parts as necessary.	
F7.3	Total travel distance failure prediction warning	(1)	The servo motor total travel distance exceeds the threshold.	Check if the threshold is set correctly.	The threshold is not set correctly.	Set the parameters so that the value of "[Pr. PF34] × [Pr. PF41]" is approximately the same as the rated life and restart the equipment.	
					The threshold is set correctly.	Check the equipment. After replacing the equipment, reset the servo motor total travel distance.	

1.6 Trouble which does not trigger alarm/warning

Point

When the servo amplifier, servo motor, or encoder malfunctions, the following status may occur.

The following example shows causes which do not trigger alarm or warning. Remove each cause referring to this section.

Description	Cause	Checkpoint	Action	Target
The display shows "AA".	The power of the servo system controller was turned off.	Check the power of the servo system controller.	Switch on the power of the servo system controller.	[B] [WB]
	A SSCNET Ⅲ cable was disconnected.	Check if "AA" is displayed in the corresponding axis and following axes.	Replace the SSCNET Ⅲ cable of the corresponding axis.	
		Check if the connectors (CN1A, CN1B) are unplugged.	Connect it correctly.	
	The control circuit power of the previous axis servo amplifier was turned off.	Check if "AA" is displayed in the corresponding axis and following axes.	Check the power of the servo amplifier.	
	The amplifier-less operation function of servo system controller is enabled.	Check if the amplifier-less operation function of servo system controller is enabled.	Disable the amplifier-less operation function.	
	An Ethernet cable was disconnected.	Check if "AA" is displayed in the corresponding axis and following axes.	Replace the Ethernet cable of the corresponding axis.	[RJ010] [GF]
		Check if the connectors (CN10A/CN10B or CN1A/CN1B) are unplugged.	Connect it correctly.	
The display shows "Ab".	A controller, which is not compatible with the servo amplifier, has been connected.	Check if a controller, which is not compatible with the servo amplifier, is connected.	Connect a compatible controller.	[B] [WB]
	The axis is disabled.	Check if the disabling control axis switch is on. [B]: SW2-2 [WB]: SW2-2 to 2-4	Turn off the disabling control axis switch.	
	The setting of the axis No. is incorrect.	Check that the other servo amplifier is not assigned to the same axis No.	Set it correctly.	
	Axis No. does not match with the axis No. set to the servo system controller.	Check the setting and axis No. of the servo system controller.	Set it correctly.	
	Information about the servo series has not set in the simple motion module.	Check the value set in Servo series (Pr.100) in the simple motion module.	Set it correctly.	
	Communication cycle does not match.	Check the communication cycle at the servo system controller side. When using 8 axes or less: 0.222 ms When using 16 axes or less: 0.444 ms When using 32 axes or less: 0.888 ms	Set it correctly.	

Description	Cause	Checkpoint	Action	Target
The display shows "Ab".	Connection to MR-J4W3-_B with software version A2 or earlier was attempted in 0.222 ms communication cycle.	Check if the communication cycle on servo system controller side is 0.222 ms.	Use them with 0.444 ms or more communication cycle.	[WB]
	MR-J4W3-_B was attempted to use in fully closed loop system.	Check if it was attempted to use in fully closed loop system.	MR-J4W3-_B does not support the fully closed loop control system. Use MR-J4-_B_ or MR-J4W2-_B.	
	A SSCNET Ⅲ cable was disconnected.	Check if "Ab" is displayed in the corresponding axis and following axes.	Replace the SSCNET Ⅲ cable of the corresponding axis.	[B] [WB]
		Check if the connectors (CN1A, CN1B) are unplugged.	Connect it correctly.	
	The control circuit power supply of the previous axis servo amplifier is off.	Check if "Ab" is displayed in the corresponding axis and following axes.	Check the power of the servo amplifier.	
	The amplifier-less operation function of servo system controller is enabled.	Check if the amplifier-less operation function of servo system controller is enabled.	Disable the amplifier-less operation function.	
	The servo amplifier is malfunctioning.	Check if "Ab" is displayed in the corresponding axis and following axes.	Replace the servo amplifier of the corresponding axis.	
	An Ethernet cable was disconnected.	Check if "Ab" is displayed in the corresponding axis and following axes.	Replace the Ethernet cable of the corresponding axis.	[RJ010] [GF]
	The servo amplifier power was switched on when the master station was off.	Check the power of the master station.	Turn on the power of the master station.	
	Communication cycle does not match.	Check the communication cycle on the master station side. When using 8 axes or less: 0.888 ms When using 16 axes or less: 1.777 ms	Set it correctly.	[RJ010]
		Check the communication cycle by referring to the controller instruction manual.	Refer to the controller instruction manual.	[GF]
	MR-J3-T10 is malfunctioning.	Replace the MR-J3-T10, and then check the repeatability.	Replace the MR-J3-T10.	[RJ010]
	The servo amplifier is malfunctioning.	Replace the servo amplifier, and then check the repeatability.	Replace the servo amplifier.	[RJ010] [GF]
	The master station is malfunctioning.	Replace the master station, and then check the repeatability.	Replace the master station.	
The display shows "b##".[7]	Test operation mode has been enabled.	Test operation setting switch is turned on.	Turn off the test operation setting switch.	[B] [WB] [RJ010] [GF]
	The system has been in the ready-off state.	Check if the servo ready state is off with the servo system controller.	Turn on the servo-on signals for all axes.	
The display shows "dEF".	Initializing point table/program is in progress.	Initializing of point table/ program was set in the parameter ([Pr. PT34] = 5001) and the power was cycled.	It takes about 20 s for startup the servo amplifier at initializing. Please wait until the display changes.	[A]
The display shows "off".	Operation mode for manufacturer setting is enabled.	Check if all of the control axis setting switches (SW2) are on.	Set the control axis setting switches (SW2) correctly.	[B] [WB] [RJ010] [GF]

Description	Cause	Checkpoint	Action	Target
The display turned off.	The external I/O terminal was shorted.	When the display is on by disconnecting the following connectors, check if the disconnected cable wire is shorted. [A]: CN1, CN2, CN3 [B] [WB] [RJ010] [GF]: CN2, CN3	Review the wiring of I/O signals.	[A] [B] [WB] [RJ010] [GF]
	The control circuit power supply is not applied.	Check if the control circuit power supply of the servo amplifier is off.	Turn on the control circuit power.	
	The voltage of the control circuit power supply has dropped.	Check if the voltage of the control circuit power supply dropped.	Increase the voltage of the control circuit power supply.	
The servo motor does not operate.	The connection of the servo motor is incorrect.	Check the wiring of U/V/W.	Connect it correctly.	[A] [B] [WB] [RJ010] [GF]
	The servo motor power supply cable was connected to a servo amplifier of other axis.	Check if the encoder cable and servo motor power supply cable are connected to the same servo amplifier.	Connect the encoder cable and servo motor power supply cable correctly.	
	An alarm or warning is occurring.	Check if an alarm or warning is occurring.	Check the content of the alarm/warning and remove its cause.	
	The system has been in the test operation mode.	[A]: Check if the lower right point is blinking. [B] [WB] [RJ010] [GF]: Check if the test operation setting switch is on (up).	Cancel the test operation mode.	
	The motor-less operation has been enabled.	[A]: Check the [Pr. PC60] setting. [B] [WB] [RJ010] [GF]: Check the [Pr. PC05] setting.	Disable the motor-less operation.	
	The torque is insufficient due to large load.	Check instantaneous torque using status display (only [A]) or MR Configurator2 if the load exceeds the maximum torque or torque limit value.	Reduce the load or use a larger capacity servo motor.	
	An unintended torque limit has been enabled.	Check if the torque limit is enabled.	Cancel the torque limit.	
	The setting of the torque limit is incorrect.	Check if the torque limit is "0". [A]: [Pr. PA11] and [Pr. PA12], or analog input [B] [WB] [RJ010]: Setting on controller side [GF]: [Pr. PA11], [Pr. PA12], or setting on controller side	Set it correctly.	
	Machine is interfering with the motor.	Check if machine is interfering.	Remove the interference.	
	For a servo motor with an electromagnetic brake, the brake has not released.	Check the power supply of the electromagnetic brake.	Turn on the electromagnetic brake power.	
	LSP (Forward rotation stroke end) and LSN (Reverse rotation stroke end) are not on.	Check if [AL. 99] is occurring.	Turn on LSP and LSN.	[A] [GF]
	SON (Servo-on) is not on.	Check the SON (Servo-on) state.	Turn on SON (Servo-on).	
	RES (Reset) is on.	Check the RES (Reset) state.	Turn off RES (Reset).	[A]
	The setting of the control mode is incorrect.	Check the [Pr. PA01] setting.	Set it correctly.	

Description	Cause	Checkpoint	Action	Target
The servo motor does not operate.	The command pulse is not inputted in the position control mode.	Check if the pulse train is outputted on the controller side.	Review the setting on the controller side.	[A]
	The wiring of the command pulse train signal is incorrect in the position control mode.	Check the cumulative command pulses using the status display or MR Configurator2. Input the pulse train command and check if the display changes.	Review the wiring. When the signal is used in open-collector type, input 24 V DC to OPC.	
	The setting of the command pulse input form is incorrect in the position control mode.	Check that the pulse train form outputted with the controller and the setting of [Pr. PA13] are matched.	Review the [Pr. PA13] setting.	
	Both of ST1 (Forward rotation start) and ST2 (Reverse rotation start) are on or off in the speed control mode or the positioning mode.	Check the status of ST1 (Forward rotation start) and ST2 (Reverse rotation start).	Turn on ST1 (Forward rotation start) or ST2 (Reverse rotation start).	
	Both of RS1 (Forward rotation selection) and RS2 (Reverse rotation selection) are on or off in the torque control mode.	Check the status of RS1 (Forward rotation selection) and RS2 (Reverse rotation selection).	Turn on RS1 (Forward rotation selection) or RS2 (Reverse rotation selection).	
	The value selected in the speed control mode or the torque control mode is low.	Check SP1 (Speed selection 1), SP2 (Speed selection 2), and SP3 (Speed selection 3), and then check if the selected internal speed is correct.	Review the selections of SP1 (Speed selection 1), SP2 (Speed selection 2), SP3 (Speed selection 3), and setting of internal speed.	
	The value selected in the positioning mode (point table method) with BCD input is low.	Check SPD1 (Speed selection 1), SPD2 (Speed selection 2), SPD3 (Speed selection 3) and SPD4 (Speed selection 4), and then check if the selected internal speed is correct.	Review the wiring. Review the selections of SPD1 (Speed selection 1), SPD2 (Speed selection 2), SPD3 (Speed selection 3), SPD4 (Speed selection 4), and setting of internal speed.	
	An analog signal is not inputted correctly.	Check the values of analog speed command and analog torque command using status display or MR Configurator2.	Input the analog signals correctly.	
	The ABS transfer mode is selected when the absolute position detection system is used.	Check if ABSM is on.	Turn off ABSM.	
	The settings of the electronic gear are incorrect.	Check the setting value of the electronic gear.	Set a proper value of the electronic gear.	[A] [GF]
	The setting of point tables is incorrect.	Check the point table setting.	Review the point table setting.	

Description	Cause	Checkpoint	Action	Target
The servo motor does not operate.	The setting of the point table No. selection is incorrect.	Check the setting of the point table No. selection (CC-Link IE Field Network: RWwn06, CC-Link IE Field Network Basic: RWwn05).	Review the setting of the point table No. selection.	[GF]
	The setting of the next station No. selection is incorrect.	Check the setting of the next station No. selection (CC-Link IE Field Network: RWwn06, CC-Link IE Field Network Basic: RWwn05).	Review the setting of the next station No. selection.	
	RX (n + 3) F (cyclic communication ready) is off (00h).	Check if the controller does not set RY (n + 3) F (cyclic communication ready) to off (00h).	Set RY (n + 3) F (cyclic communication ready) to on (01h).	
	The control mode was not set with Modes of operation (6060h).	Check if the control mode was not set with Modes of operation (6060h).	Set the control mode with Modes of Operation (6060h).	
	The controller was stopped (STOP status). (CC-Link IE Field Network Basic-compatible controller and protocol version 1 or earlier)	Check if the controller is stopped (STOP status).	Run the controller (RUN status). For the protocol version compatible with the controller, contact the controller manufacturer.	
	An error occurred in the controller. (CC-Link IE Field Network Basic-compatible controller only)	Check if an error occurs in the controller.	Remove the error in accordance with the controller instruction manual.	
	Wiring or the command pulse multiplication setting is incorrect.	When using an MR-HDP01 manual pulse generator, check the wiring and the command pulse multiplication setting (assignment of TP0, TP1 and [Pr. PT03] setting).	Review the wiring and the command pulse multiplication setting.	[A]
	Power is not supplied to the MR-HDP01 manual pulse generator.	A power supply is not connected between +5 V to 12 V and 0 V of MR-HDP01.	Connect a power supply between +5 V to 12 V and 0 V of MR-HDP01.	
	Power is not supplied to OPC (power input for open-collector sink interface).	Between DICOM and OPC of the CN1 connector of the servo amplifier is not connected.	Connect between DICOM and OPC.	
	Power is not supplied to OPC (power input for open-collector sink interface).	Between DICOM and OPC of the CN1 connector of the servo amplifier is not connected.	Connect between DICOM and OPC.	
	The axis is disabled.	Check if the disabling control axis switch is on. [B]: SW2-2 [WB]: SW2-2 to 4	Turn off the disabling control axis switch.	[B] [WB]
	An error is occurring on the servo system controller side.	Check if an error is occurring on the servo system controller side.	Cancel the error of the servo system controller.	
	The setting of a parameter is incorrect on the servo system controller side.	Check the settings of parameters on the servo system controller side.	Review the setting of the parameter on the servo system controller side.	
	The position command is not inputted correctly.	Check cumulative command pulses using MR Configurator2 and check if numerical values are changed by inputting the command.	Review the setting of the servo system controller and the servo program.	
	The connection destination of the encoder cable is incorrect.	Check if the connection destinations of CN2A, CN2B, and CN2C are the same as CNP3A, CNP3B, and CNP3C.	Connect encoder cables correctly.	[WB]

Description	Cause	Checkpoint	Action	Target
The speed of the servo motor or linear servo motor is not increased. Or the speed is increased too much.	The setting of the speed command, speed limit, or electronic gear is not correct.	Check the settings of the speed command, speed limit, and electronic gear.	Review the settings of the speed command, speed limit, and electronic gear.	[A] [B] [WB] [RJ010] [GF]
	The connection of the servo motor is incorrect.	Check the wiring of U/V/W.	Connect it correctly.	
	The voltage of the main circuit power supply has dropped.	Check if the voltage of the main circuit power supply dropped.	Increase the voltage of the main circuit power supply.	
	For a servo motor with an electromagnetic brake, the brake has not released.	Check the power supply of the electromagnetic brake.	Turn on the electromagnetic brake power.	
	The selection of SP1 (Speed selection 1), SP2 (Speed selection 2), or SP3 (Speed selection 3) is incorrect in the speed control mode or the torque control mode.	Check SP1 (Speed selection 1), SP2 (Speed selection 2), and SP3 (Speed selection 3), and then check if the selected internal speed is correct.	Review the settings of SP1 (Speed selection 1), SP2 (Speed selection 2), SP3 (Speed selection 3), and setting of internal speed.	[A]
	An analog signal is not input correctly in the speed control mode or the torque control mode.	Check the values of the analog speed command and the analog torque command using the status display or MR Configurator2.	Input the analog signal correctly.	
	The selection of SPD1 (Speed selection 1), SPD2 (Speed selection 2), SPD3 (Speed selection 3), or SPD4 (Speed selection 4) is incorrect in the positioning mode (point table method) with BCD input.	Check SPD1 (Speed selection 1), SPD2 (Speed selection 2), SPD3 (Speed selection 3) and SPD4 (Speed selection 4), and then check if the selected internal speed is correct.	Review the wiring. Review the settings of SPD1 (Speed selection 1), SPD2 (Speed selection 2), SPD3 (Speed selection 3), SPD4 (Speed selection 4), and setting of internal speed.	
	An analog signal is not input correctly in the positioning mode (point table method and program method).	Check the value of VC (Analog override) using the status display or MR Configurator2.	Set the VC (Analog override) and input the analog signal correctly.	
	The selection of OV0 (Digital override selection 1), OV1 (Digital override selection 2), OV2 (Digital override selection 3), or OV3 (Digital override selection 4) is incorrect in the positioning mode (indexer method).	Check OV0 (Digital override selection 1), OV1 (Digital override selection 2), OV2 (Digital override selection 3) and OV3 (Digital override selection 4), and then check if the selected override level ([%]) is correct.	Review the wiring. Review the settings of OV0 (Digital override selection 1), OV1 (Digital override selection 2), OV2 (Digital override selection 3), and OV3 (Digital override selection 4).	
The servo motor vibrates with low frequency.	The estimated value of the load to motor inertia ratio by auto tuning is incorrect. When the load to motor inertia ratio is set by manual, the setting value is incorrect.	If the servo motor may be driven with safety, repeat acceleration and deceleration several times to complete auto tuning. Check if the load to motor inertia ratio is proper compared with the actual ratio for manual setting.	Execute auto tuning and one-touch tuning to reset the load to motor inertia ratio. Set the load to motor inertia ratio correctly for manual setting.	[A] [B] [WB] [RJ010] [GF]
	The command from the controller is unstable.	Check the command from the controller.	Review the command from the controller. Check the cable for command if there is failure such as disconnection.	
	Torque or thrust during acceleration/deceleration is overshooting exceeding the limit of the servo motor when the motor stops.	Check the effective load ratio during acceleration/deceleration if torque/thrust exceeds the maximum torque/thrust.	Reduce the effective load ratio by increasing acceleration/deceleration time and reducing load.	
	The servo gain is low. Or the response of auto tuning is low.	Check if the trouble is solved by increasing auto tuning response ([Pr. PA09]).	Adjust gains.	

Description	Cause	Checkpoint	Action	Target
An unusual noise is occurring at the servo motor.	The servo gain is low. Or the response of auto tuning is low.	Check if the trouble is solved by increasing auto tuning response ([Pr. PA09]).	Adjust gains.	[A] [B] [WB] [RJ010] [GF]
	Bearing life expired.	If the servo motor may be driven with safety, remove the load and check the noise with the servo motor only. If you can remove the servo motor from machine, remove the servo motor power cable to release the brake and check the noise by rotating the shaft by your hands.	Noising means that the bearing life expired. Replace the servo motor. When not noising, maintain the machine.	
	For a servo motor with an electromagnetic brake, the brake has not released.	Check the power supply of the electromagnetic brake.	Turn on the electromagnetic brake power.	
	For a servo motor with an electromagnetic brake, the brake release timing is not correct.	Check the brake release timing.	Review the brake release timing. Please consider that the electromagnetic brake has release delay time.	
The servo motor vibrates.	The servo gain is too high. Or the response of auto tuning is too high.	Check if the trouble is solved by reducing auto tuning response ([Pr. PA09]).	Adjust gains.	[A] [B] [WB] [RJ010] [GF]
	The machine is vibrating (resonating).	If the servo motor may be driven with safety, check if the trouble is solved by one-touch tuning or adaptive tuning.	Adjust the machine resonance suppression filter.	
	The load side is vibrating.	If the servo motor may be driven with safety, check if the trouble is solved by advanced vibration suppression control Ⅱ.	Execute the advanced vibration suppression control Ⅱ.	
	Feedback pulses are being miscounted due to entered noise into an encoder cable.	Check the cumulative feedback pulses using status display (only [A]) or MR Configurator2 if its numerical value is skipped.	Please take countermeasures against noise by laying the encoder cable apart from power cables, etc.	
	There is a backlash between the servo motor and machine (such as gear, coupling).	Check if there is a backlash on the machine.	Adjust the backlash on the coupling and machine.	
	The rigidity of the servo motor mounting part is low.	Check the mounting part of the servo motor.	Increase the rigidity of the mounting part by such as increasing the board thickness and by reinforcing the part with ribs.	
	The connection of the servo motor is incorrect.	Check the wiring of U/V/W.	Connect it correctly.	
	An unbalanced torque of the machine is large.	Check if the vibration varies depending on the speed.	Adjust balance of the machine.	
	The eccentricity due to core gap is large.	Check the mounting accuracy of the servo motor and machine.	Review the accuracy.	
	A load for the shaft of the servo motor is large.	Check the load for the shaft of the servo motor.	Adjust the load for the shaft to within specifications of the servo motor. For the shaft permissible load, refer to "Servo Motor Instruction Manual (Vol. 3)".	
	An external vibration propagated to the servo motor.	Check the vibration from outside.	Prevent the vibration from the external vibration source.	

Description	Cause	Checkpoint	Action	Target
The rotation accuracy is low. (The speed is unstable.)	The servo gain is low. Or the response of auto tuning is low.	Check if the trouble is solved by increasing auto tuning response ([Pr. PA09]).	Adjust gains.	[A] [B] [WB] [RJ010] [GF]
	The torque is insufficient due to large load.	Check instantaneous torque using status display (only [A]) or MR Configurator2 if the load exceeds the maximum torque or torque limit value.	Reduce the load or use a larger capacity servo motor.	
	An unintended torque limit has been enabled.	Check if TLC (Limiting torque) is on using status display or MR Configurator2.	Cancel the torque limit.	
	The setting of the torque limit is incorrect.	Check if the limiting torque is too low. [A]: [Pr. PA11] and [Pr. PA12], or analog input [B] [WB] [RJ010]: Setting on controller side [GF]: [Pr. PA11], [Pr. PA12], or setting on controller side	Set it correctly.	
	For a servo motor with an electromagnetic brake, the brake has not released.	Check the power supply of the electromagnetic brake.	Turn on the electromagnetic brake power.	
	The command from the controller is unstable.	Check the ripple of the command frequency with MR Configurator2.	Review the command from the controller. Check the cable for command if there is failure such as disconnection.	
The machine vibrates unsteadily when it stops.	The servo gain is low. Or the response of auto tuning is low.	Check if the trouble is solved by increasing auto tuning response ([Pr. PA09]).	Adjust gains.	[A] [B] [WB] [RJ010] [GF]
The servo motor starts to drive immediately after power on of the servo amplifier. The servo motor starts to drive immediately after servo-on.	SON (Servo-on) is on at power on.	Check if SON (Servo-on) and RD (Ready) are on using status display or MR Configurator2.	Review the sequence of SON (Servo-on).	[A]
	An analog signal is inputted from the beginning.	Check the status of analog speed command and analog torque command using status display or MR Configurator2.	Review the timing of inputting analog signals.	
	Zero point of an analog signal deviates.	Check if the servo motor drives while 0 V is inputted to the analog signal.	Execute the VC automatic offset or adjust offset of the analog signal with [Pr. PC37] or [Pr. PC38].	
	For a servo motor with an electromagnetic brake, the brake release timing is not correct.	Check the brake release timing.	Review the brake release timing.	[A] [B] [WB] [RJ010] [GF]
	The connection of the servo motor is incorrect.	Check the wiring of U/V/W.	Connect it correctly.	
Home position deviates at home position return.	For the dog type home position return, the point which the dog turns off and the point which Z-phase pulse is detected (CR input position) are too close.	Check if a fixed amount (in one revolution) deviates.	Adjust the dog position.	[A] [B] [WB] [RJ010] [GF]
	The in-position range is too large.	Check the setting of the in-position range in [Pr. PA10].	Set a narrower in-position range.	
	The proximity dog switch is failure. Or mounting proximity dog switch is incomplete.	Check if the proximity dog signal is inputted correctly.	Repair or replace the proximity dog switch. Adjust the mounting of the proximity dog switch.	
	The program on the controller side is incorrect.	Check the program on the controller side such as home position address settings or sequence programs.	Review the programs on the controller side.	

Description	Cause	Checkpoint	Action	Target
The position deviates during operation after home position return.	The position command and actual machine position are different.	Check that "cumulative feedback pulses × travel distance per pulse" matches the actual machine position. Check if "cumulative feedback pulses × feed length multiplication" matches the actual machine position.	Review the position command and electronic gear setting.	[A] [B] [WB] [RJ010] [GF]
	The position command and actual machine position are different.	Check that "cumulative feedback pulses × travel distance per pulse" matches the actual machine position. Check if "cumulative feedback pulses × feed length multiplication" matches the actual machine position.	Review the position command and electronic gear setting.	
	An alarm or warning is occurring.	Check if an alarm or warning is occurring.	Check the content of the alarm/warning and remove its cause.	
	The servo gain is low. Or the response of auto tuning is low.	Check if the trouble is solved by increasing auto tuning response ([Pr. PA09]).	Adjust gains.	
	The reduction ratio is not calculated correctly for the geared servo motor.	Check the following settings. [A]: Number of command input pulses per revolution ([Pr. PA05]) or electronic gear ([Pr. PA06] and [Pr. PA07]) [B] [WB] [RJ010]: Number of pulses per revolution, travel distance (setting on the controller side) [GF]: Electronic gear ([Pr. PA06], [Pr. PA07])	Review the calculation of the reduction ratio.	
	The in-position range is too large.	Check the setting of the in-position range in [Pr. PA10].	Set a narrower in-position range.	

Description	Cause	Checkpoint	Action	Target
The position deviates during operation after home position return.	The command pulses were miscounted due to noise.	Check that the command value of the controller and the number of cumulative command pulses are matched.	Please take countermeasures against noise for the command cable. Review the shield procedure of the command cable.	[A]
	The cable for a command is connected loosely or disconnected.	Check that the command value of the controller and the number of cumulative command pulses are matched.	Repair the cable for a command.	
	Frequency of the pulse train command is too high.	Check the pulse train command frequency is within the range of specifications. It is 500 kpulses/s or less for the open-collector type. It is 4 Mpulses/s or less for the differential line driver type.	Review the pulse train command frequency. Select a filter according to the pulse train command frequency from "Command input pulse train filter selection" in [Pr. PA13].	
	A cable for command is too long.	Check the ripple of the command frequency with oscilloscope.	Shorten the wiring length. Cable length must be 10 m or shorter for differential line driver output and 2 m or shorter for open-collector output.	
	SON (Servo-on) turned off during operation.	Check if SON (Servo-on) is off during operation using status display or MR Configurator2.	Review the wiring and sequence not to turn off SON (Servo-on) during operation.	
	CR (Clear) or RES (Reset) turned on during operation.	Check if CR (Clear) or RES (Reset) is on during operation using status display or MR Configurator2.	Review the wiring and sequence not to turn on CR (Clear) or RES (Reset) during operation.	
	The setting of point tables and start timing is incorrect.	Check if a time period from after switching timings of point table setting value and point table No. until a start timing is 3 ms or more.	Review the point table setting. Review the start timing.	
	An input signal to the MR-D01 extension IO unit is incorrect.	Check the selection of the point table No. selection 1 to point table No. selection 8 and check the wiring.	Check the input signal switch to the MR-D01 extension IO unit and check the wiring.	
	The program, start timing, etc. are incorrect.	Check if a time period from after switching timings of BCD input program and point table No. until a start timing is 3 ms or more, etc.	Review the controller programs.	
	The setting of MR-DS60 digital switch is incorrect.	Check the [Pr. Po10] setting.	Review the [Pr. Po10] setting.	
	The wiring between MR-DS60 digital switch and MR-D01 extension IO unit is incorrect.	Check the wiring between MR-DS60 digital switch and MR-D01 extension IO unit.	Review the wiring between MR-DS60 digital switch and MR-D01 extension IO unit.	
	Wiring of the MR-HDP01 manual pulse generator or setting of "manual pulse generator multiplication" ([Pr. PT03], TP0 (manual pulse generator multiplication 1), TP1 (manual pulse generator multiplication 2)) is incorrect.	The input value from the MR-HDP01 manual pulse generator and the command position do not match.	Review the wiring. Set the multiplication setting correctly.	
	A mechanical slip occurred. Or the backlash of the machine part is large.	Check if there is a slip or backlash on the machine part.	Adjust the machine part.	[A] [B] [WB] [RJ010] [GF]

Description	Cause	Checkpoint	Action	Target
A restoration position deviates at restoration of power for the absolute position detection system.	The motor was rotated exceeding the maximum permissible speed at power failure (6000 r/min) by an external force during servo amplifier power off. (Note: The acceleration time is 0.2 s or less.)	Check if the motor was accelerated suddenly to 6000 r/min by an external force.	Extend the acceleration time.	[A] [B] [WB] [RJ010] [GF]
	The servo amplifier power turned on while the servo motor was rotated exceeding 3000 r/min by an external force.	Check if the servo amplifier power turned on while the servo motor was rotated exceeding 3000 r/min by an external force.	Review the power-on timing.	
	Transfer data to the controller is incorrect.	Check the ABS data with MR Configurator2.	Review the controller programs.	[A]
Overshoot/undershoot occurs.	The servo gain is low or too high. The response of auto tuning is low or too high.	Check the velocity waveform with a graph using MR Configurator2 if overshoot/ undershoot is occurring.	Adjust the response of auto tuning and execute the gain adjustment again.	[A] [B] [WB] [RJ010] [GF]
	The setting of [Pr. PB06 Load to motor inertia ratio/ load to motor mass ratio] is incorrect.	Check that the setting value of [Pr. PB06 Load to motor inertia ratio/ load to motor mass ratio] and the actual load moment of inertia or load mass are matched.	Set it correctly.	
	Capacity shortage or shortage of the maximum torque (thrust) due to too large load.	Check the instantaneous torque using status display if the maximum torque (maximum thrust) exceeds the torque limit value (thrust limit value).	Reduce the effective load ratio by increasing acceleration/ deceleration time and reducing load.	
	The setting of the torque limit is incorrect.	Check the instantaneous torque using status display if the maximum torque (maximum thrust) exceeds the torque limit value (thrust limit value).	Review the torque limit setting.	
	Backlash of the machine part is large.	Check if there is a backlash on the machine part.	Adjust the backlash on the coupling and machine part.	
A communication with servo amplifier fails using MR Configurator2. (For details, refer to Help of MR Configurator2.)	The communication setting is incorrect.	Check the communication setting such as baud rate and ports.	Set the communication setting correctly.	[A] [B] [WB] [RJ010] [GF]
	A model is being connected other than the model set in model selection.	Check if the model selection is set correctly.	Set the mode selection correctly.	
	The driver was not set correctly.	Check the bottom of the USB (Universal Serial Bus) controller with the device manager of the personal computer if "MITSUBISHI MELSERVO USB Controller" is being displayed.	Delete an unknown device or other devices, cycle the power of the servo amplifier, and reset according to Found New Hardware Wizard.	
	They are off-line status.	Check if they are off-line.	Set them to on-line.	
	A communication cable is malfunctioning.	Check if the communication cable is malfunctioning.	Replace the communication cable.	
For a servo motor with an electromagnetic brake, the brake went out.	The electromagnetic brake is failure due to its life. For the life of electromagnetic brake, refer to "Servo Motor Instruction Manual (Vol. 3)".	Remove the servo motor and all wirings from the machine and check if the servo motor shaft can be rotated by hands. (If it is rotated by hands, the brake is failure.)	Replace the servo motor.	[A] [B] [WB] [RJ010] [GF]
The coasting distance of the servo motor became longer.	The load was increased and permissible load to motor inertia ratio was exceeded.	Check if the load was increased.	Reduce the load.	[A] [B] [WB] [RJ010] [GF]
	An external relay is malfunctioning. Or the wiring of MBR (Electromagnetic brake interlock) is incorrect.	Check the external relay and wirings connected to MBR (Electromagnetic brake interlock) if they are malfunctioning.	Replace the external relay. Or review the wiring.	
	The electromagnetic brake is failure due to its life. For the life of electromagnetic brake, refer to "Servo Motor Instruction Manual (Vol. 3)".	Remove the servo motor and all wirings from the machine and check if the servo motor shaft can be rotated by hands. (If it is rotated by hands, the brake is failure.)	Replace the servo motor.	

Description	Cause	Checkpoint	Action	Target
The program operation is not in progress.	The command speed of the positioning operation is low.	An abnormal value such as 0 [r/min] was set for specifying the servo motor speed.	Review the program.	[A]
	The program stops at the state of waiting for external signal on.	A program input number set with SYNC command does not match with the actual inputted signal.	Review the program or signal to use.	
A point table was executed but the operation did not start.	A positioning to the same position is repeated.	Multiple operation starts which have the same specified number of point table are in progress.	Review the setting of the point table or procedures of the operation.	[A] [GF]
		Positioning to a same point was endlessly repeated with automatic continuous operation "8, 9, 10, 11" was selected in sub functions of the point table operation.	Review the setting of the point table or procedures of the operation.	
The electromagnetic brake cannot be canceled.	The wiring is incorrect.	Check the SBC output signal.	Review the output signals.	[B]
	A signal of output device is not outputted correctly.	Check if the output device cable is wired correctly. Or check if a load of output device is over specifications.	Review the wiring or load.	
	The functional safety unit is malfunctioning.	Replace the functional safety unit, and then check the repeatability.	Replace the functional safety unit.	
A vertical axis falls while the SBC output is used.	The STO function is used during servo-on.	Check if the SS1 function is enabled.	Enable the SS1 function.	[B]
	A signal of output device is not outputted correctly.	Check if the output device cable is wired correctly. Or check if a load of output device is over specifications.	Review the wiring or load.	
	The functional safety unit is malfunctioning.	Replace the functional safety unit, and then check the repeatability.	Replace the functional safety unit.	
	The setting of a waiting time of the electromagnetic brake sequence output is incorrect.	Check if [Pr. PC02 Electromagnetic brake sequence output] and [Pr. PSA03 SS1 monitoring deceleration time] are set correctly.	Set it correctly.	
Modbus RTU communication is not established.	The servo amplifier is not set to Modbus RTU communication protocol.	Check if "communication protocol selection" in [Pr. PC71] is correctly set.	Select Modbus RTU protocol.	[A]
	The communication setting is not set correctly.	Check if [Pr. PC70 Modbus RTU communication station number setting] is set correctly.	Check [Pr. PC70 Modbus RTU communication station number setting] and the station No. specified in a Query message from the controller if they are matched together.	
		Check if "Modbus RTU communication baud rate selection" in [Pr. PC71] is set correctly.	Check "Modbus RTU communication baud rate selection" and the communication baud rate setting of the controller if they are matched together.	
		Check if "Modbus RTU communication parity selection" in [Pr. PF45] is set correctly.	Check "Modbus RTU communication parity selection" and the parity setting of the controller if they are matched together.	
	The servo amplifier is not compatible with Modbus RTU communication.	For MR-J4-_A_-RJ 100 W or more servo amplifier, check that the servo amplifier was manufactured in January 2015 or later. Check if MR-J4-_A_ servo amplifier or MR-J4-03A6(-RJ) servo amplifier is being used.	For MR-J4-_A_-RJ 100 W or more servo amplifier, use the one manufactured in January 2015 or later. (MR-J4-_A_ servo amplifier or MR-J4-03A6(-RJ) servo amplifier is not compatible with Modbus RTU communication.)	
	A communication cable is malfunctioning.	Check if the communication cable has any failure such as damage.	Replace the communication cable.	

Description	Cause	Checkpoint	Action	Target
RS-422 communication (Mitsubishi Electric general-purpose AC servo protocol) is not established.	The servo amplifier is not set to RS-422 communication protocol.	Check if "communication protocol selection" in [Pr. PC71] is correctly set.	Select RS-422/RS-485 communication (Mitsubishi Electric general-purpose AC servo protocol).	[A]
	The communication setting is not set correctly.	Check if [Pr. PC20 Station number setting] is set correctly.	Check [Pr. PC20 Station number setting] and the station No. specified by the controller if they are matched together.	
		Check if "RS-422 communication baud rate selection" in [Pr. PC21] is set correctly.	Check "RS-422 communication baud rate selection" and the communication baud rate setting of the controller if they are matched together.	
	A communication cable is malfunctioning.	Check if the communication cable has any failure such as damage.	Replace the communication cable.	
CC-Link IE Field Network Basic communication or SLMP is not established.	The IP address is not set correctly.	Check if [Pr. PN11 IP address setting A] and [Pr. PN12 IP address setting B] are set correctly.	Check if the parameter setting values match the designated IP address of the controller.	[GF]
		Check if [Pr. PN13 Subnet mask setting A] and [Pr. PN14 Subnet mask setting B] are set correctly.	Check if the parameter setting values are set correctly.	
	The IP address filter is not set correctly.	Check if [Pr. PN18 IP address filter A] and [Pr. PN19 IP address filter B] are set correctly.	Check if the parameter setting values match the address of external devices.	
		Check if [Pr. PN20 IP address filter A range specification] and [Pr. PN21 IP address filter B range specification] are set correctly.	Check if the parameter setting values are set correctly.	
	The designated operation IP address is not set correctly.	Check if [Pr. PN22 Operation specification IP address A] and [Pr. PN23 Operation specification IP address B] are set correctly.	Check if the parameter setting values match the IP address of the controller that transmits commands.	
		Check if [Pr. PN24 Operation specification IP address range specification] is set correctly.	Check if the parameter setting values are set correctly.	
	TCP is selected.	Check if TCP is selected with the communication setting.	Select UDP.	
	An Ethernet cable is malfunctioning.	Check if the Ethernet cable has any failure such as damage.	Replace the Ethernet cable.	
When CC-Link IE Field Network Basic is used, the servo motor stopped while the control command is on.	An alarm or warning is occurring.	Check if an alarm or warning is occurring.	Check the contents of the alarm/warning, and remove its cause.	
	The link device (cyclic communication ready) is off.	Check if the controller does not turn off the cyclic communication ready command.	Turn on the cyclic communication ready command.	
	An Ethernet cable was disconnected.	Check if the cable is disconnected from the connector (CN1).	Connect it correctly.	
	An Ethernet cable is malfunctioning.	Check if the Ethernet cable has any failure such as damage.	Replace the Ethernet cable.	

*1 ## indicates axis No.

1.7 Network module error codes

If an error occurs in the network module, a network module error code will be displayed in "Alarm Display" of MR Configurator2.

For details of the network module error codes, refer to "Exception Codes" of "Anybus CompactCom 40 Software Design Guide (Doc.Id. HMSI-216-125)".

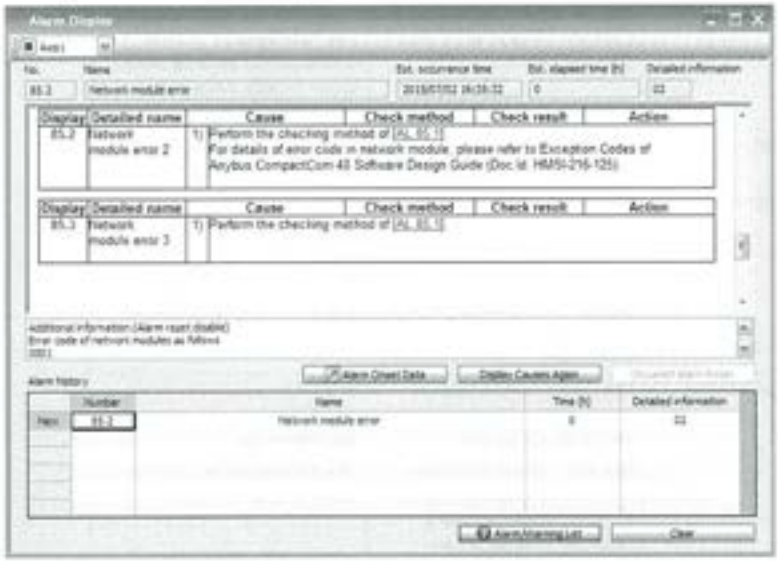

CLIMAX

BORTECH CALDER H&S TOOL